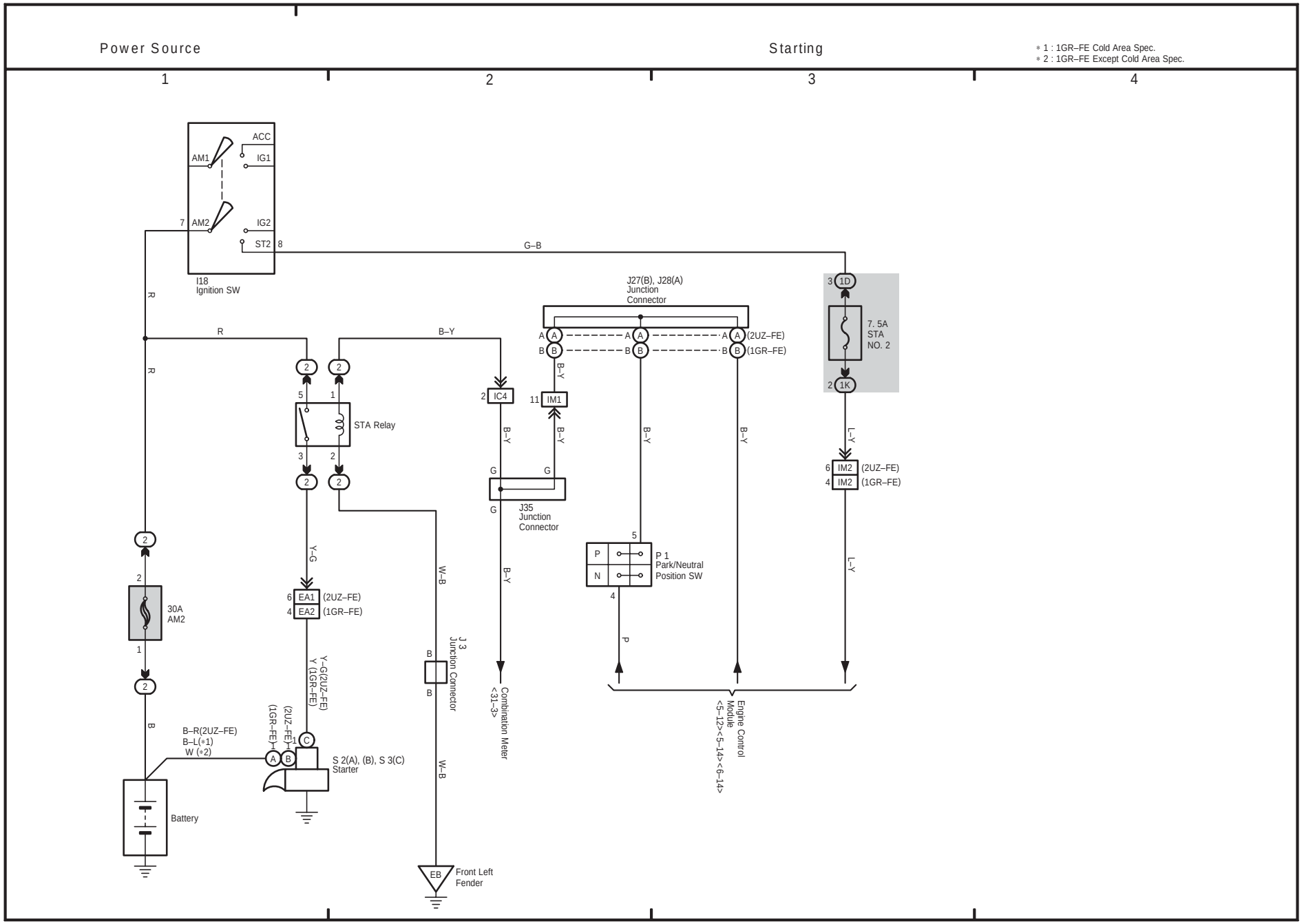
Power Source
Starting
1
2
3
4
* 1 : 1GR–FE Cold Area Spec.
* 2 : 1GR–FE Except Cold Area Spec.
ACC
AM1
IG1
AM2
IG2
ST2
I18
Ignition SW
G–B
R
B–Y
STA Relay
IC4
IM1
J27(B), J28(A)
Junction
Connector
(2UZ–FE)
(1GR–FE)
7. 5A
STA
NO. 2
1D
1K
L–Y
IM2
J35
Junction
Connector
P 1
Park/Neutral
Position SW
30A
AM2
Y–G
EA1
EA2
W–B
J 3
Junction Connector
Combination Meter
<31–3>
Engine Control
Module
<5–12><5–14><6–14>
B–R(2UZ–FE)
B–L(*1)
W (*2)
S 2(A), (B), S 3(C)
Starter
Y–G(2UZ–FE)
Y (1GR–FE)
Battery
EB
Front Left
Fender

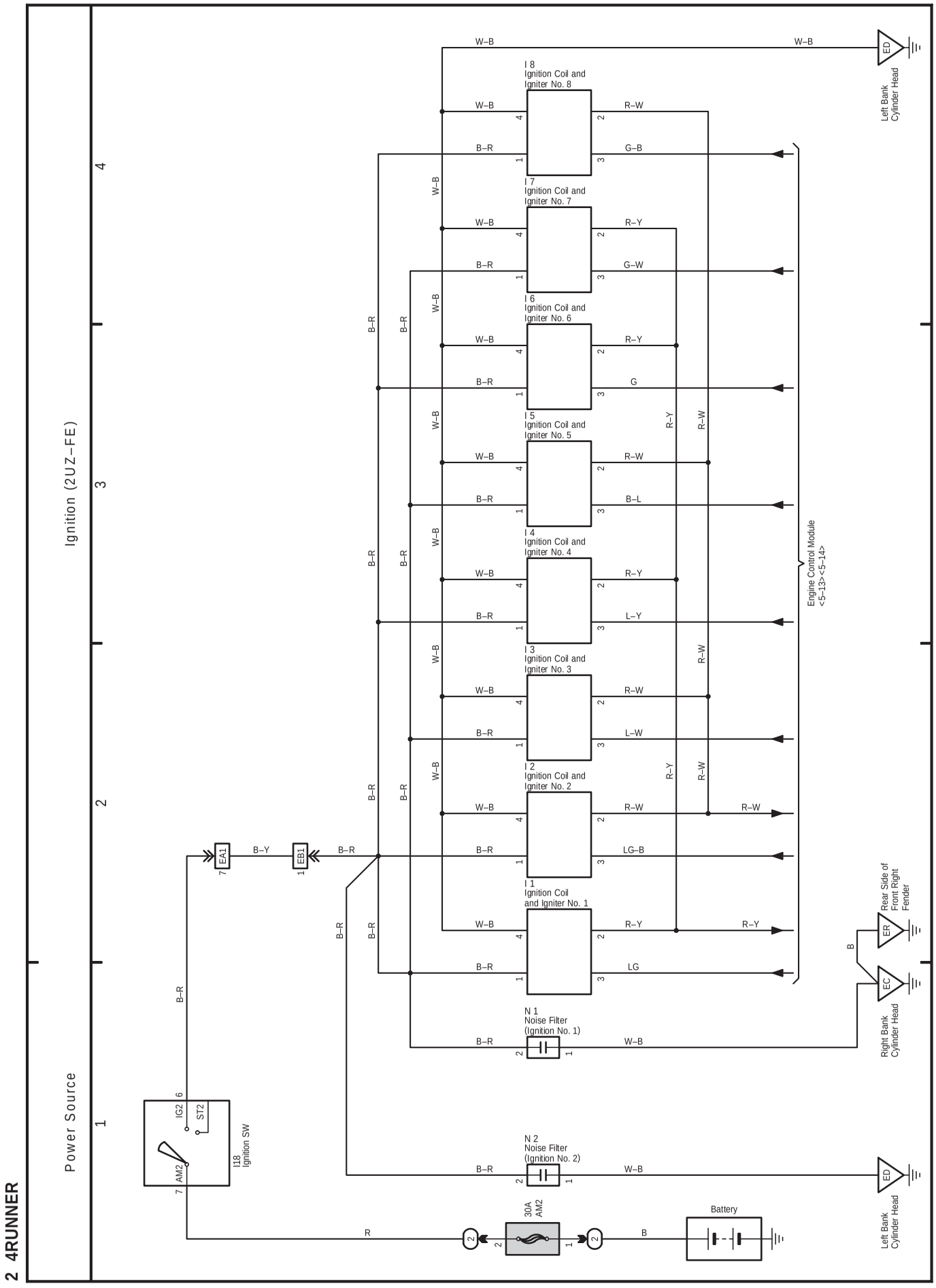
Ignition (2UZ-FE)
Power Source
1
2
3
4
2 4RUNNER
I 8 Ignition Coil and Igniter No. 8
I 7 Ignition Coil and Igniter No. 7
I 6 Ignition Coil and Igniter No. 6
I 5 Ignition Coil and Igniter No. 5
I 4 Ignition Coil and Igniter No. 4
I 3 Ignition Coil and Igniter No. 3
I 2 Ignition Coil and Igniter No. 2
I 1 Ignition Coil and Igniter No. 1
Engine Control Module <5-13><5-14>
N 1 Noise Filter (Ignition No. 1)
N 2 Noise Filter (Ignition No. 2)
I18 Ignition SW
IG2
ST2
AM2
30A AM2
Battery
Left Bank Cylinder Head
Right Bank Cylinder Head
Rear Side of Front Right Fender
ED
EC
ER
EA1
EB1
W–B
B–R
R–W
R–Y
G–B
G–W
G
B–L
L–Y
L–W
LG–B
LG
B–Y
R

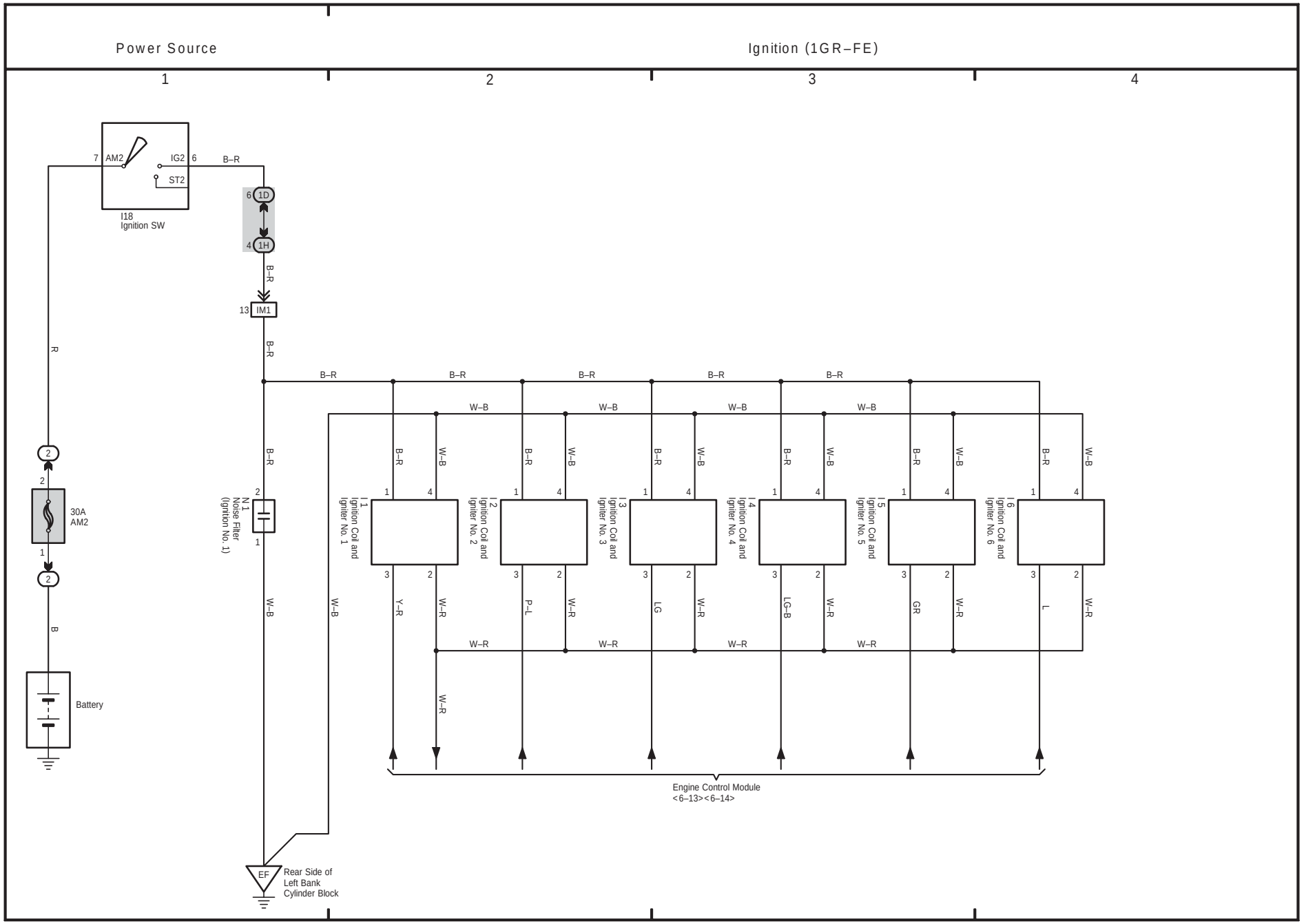
Power Source
Ignition (1GR–FE)
1
2
3
4
7 AM2
IG2 6
ST2
B–R
I18
Ignition SW
6 1D
4 1H
B–R
13 IM1
B–R
R
2
2
30A
AM2
1
2
B
Battery
B–R
2
N1
Noise Filter
(Ignition No. 1)
1
W–B
EF
Rear Side of
Left Bank
Cylinder Block
B–R
B–R
B–R
B–R
B–R
W–B
W–B
W–B
W–B
I1
Ignition Coil and
Igniter No. 1
I2
Ignition Coil and
Igniter No. 2
I3
Ignition Coil and
Igniter No. 3
I4
Ignition Coil and
Igniter No. 4
I5
Ignition Coil and
Igniter No. 5
I6
Ignition Coil and
Igniter No. 6
1
4
3
2
Y–R
P–L
LG
LG–B
GR
L
W–R
W–R
W–R
W–R
W–R
W–R
Engine Control Module
<6–13><6–14>

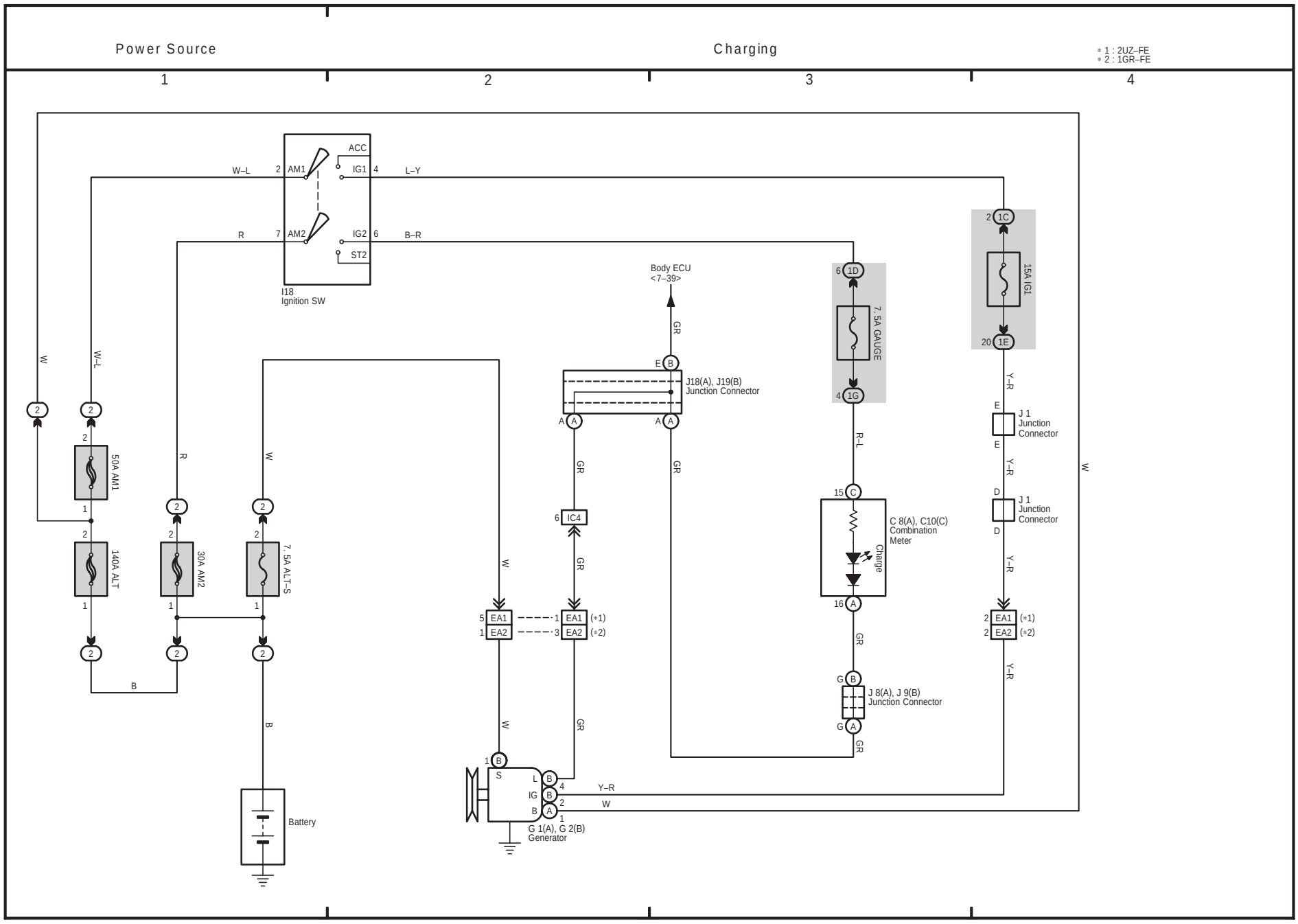
Power Source
Charging
1
2
3
4
* 1 : 2UZ–FE
* 2 : 1GR–FE
ACC
AM1
IG1
AM2
IG2
ST2
I18
Ignition SW
W–L
L–Y
R
B–R
W
50A AM1
140A ALT
30A AM2
7.5A ALT–S
B
Battery
Body ECU
<7–39>
GR
J18(A), J19(B)
Junction Connector
IC4
EA1
EA2
(*1)
(*2)
G 1(A), G 2(B)
Generator
L
IG
S
Y–R
7.5A GAUGE
R–L
C 8(A), C10(C)
Combination
Meter
Charge
J 8(A), J 9(B)
Junction Connector
15A IG1
J 1
Junction
Connector

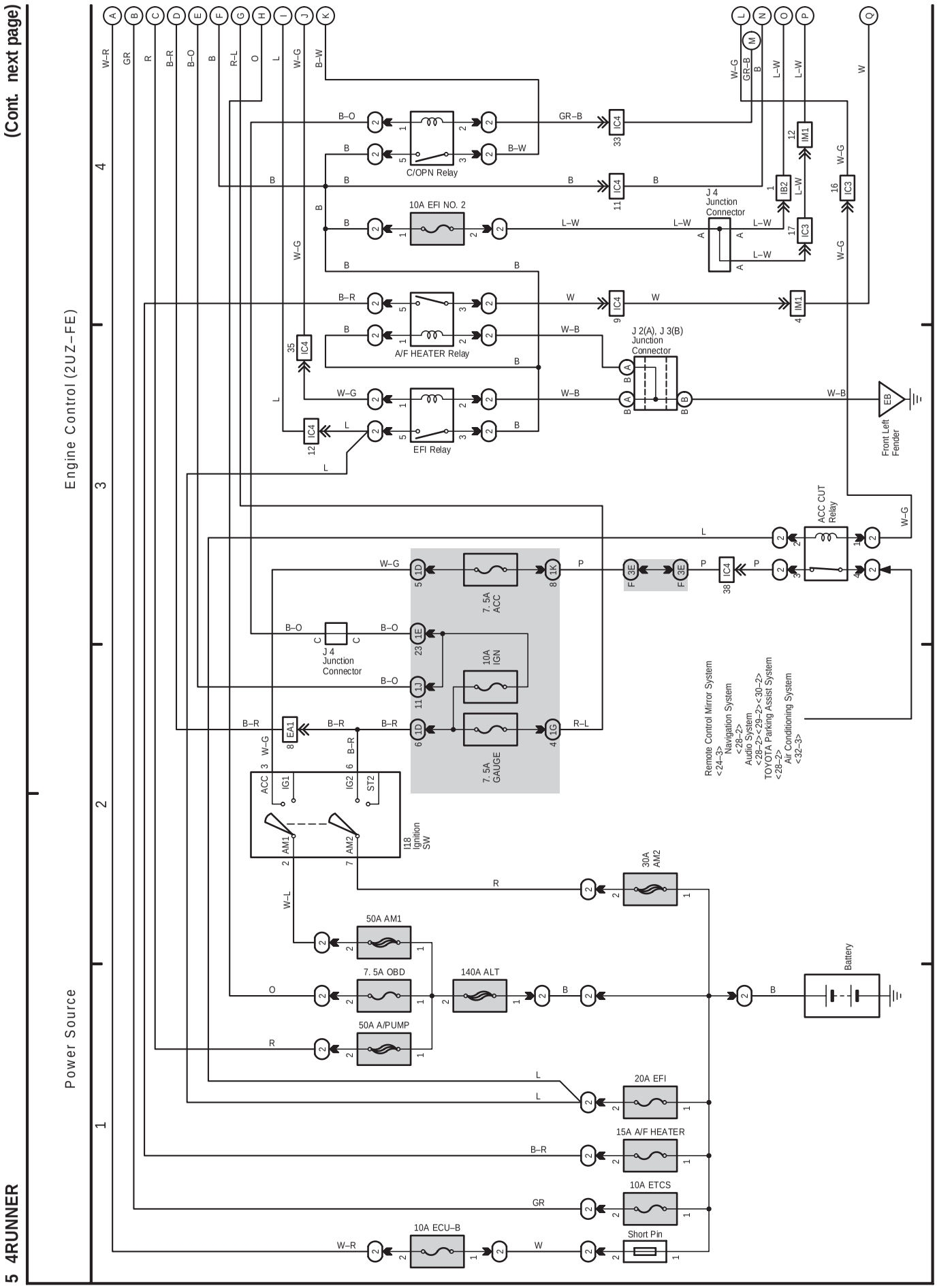
(Cont. next page)
Engine Control (2UZ–FE)
Power Source
5 4RUNNER
C/OPN Relay
10A EFI NO. 2
A/F HEATER Relay
EFI Relay
J 4 Junction Connector
J 2(A), J 3(B) Junction Connector
Front Left Fender
ACC CUT Relay
7. 5A ACC
10A IGN
7. 5A GAUGE
I18 Ignition SW
30A AM2
50A AM1
7. 5A OBD
140A ALT
50A A/PUMP
20A EFI
15A A/F HEATER
10A ETCS
10A ECU–B
Short Pin
Battery
Remote Control Mirror System <24–3>
Navigation System <28–2>
Audio System <28–2><29–2><30–2>
TOYOTA Parking Assist System <28–2>
Air Conditioning System <32–3>

(Cont. next page)

Engine Control (2UZ–FE)

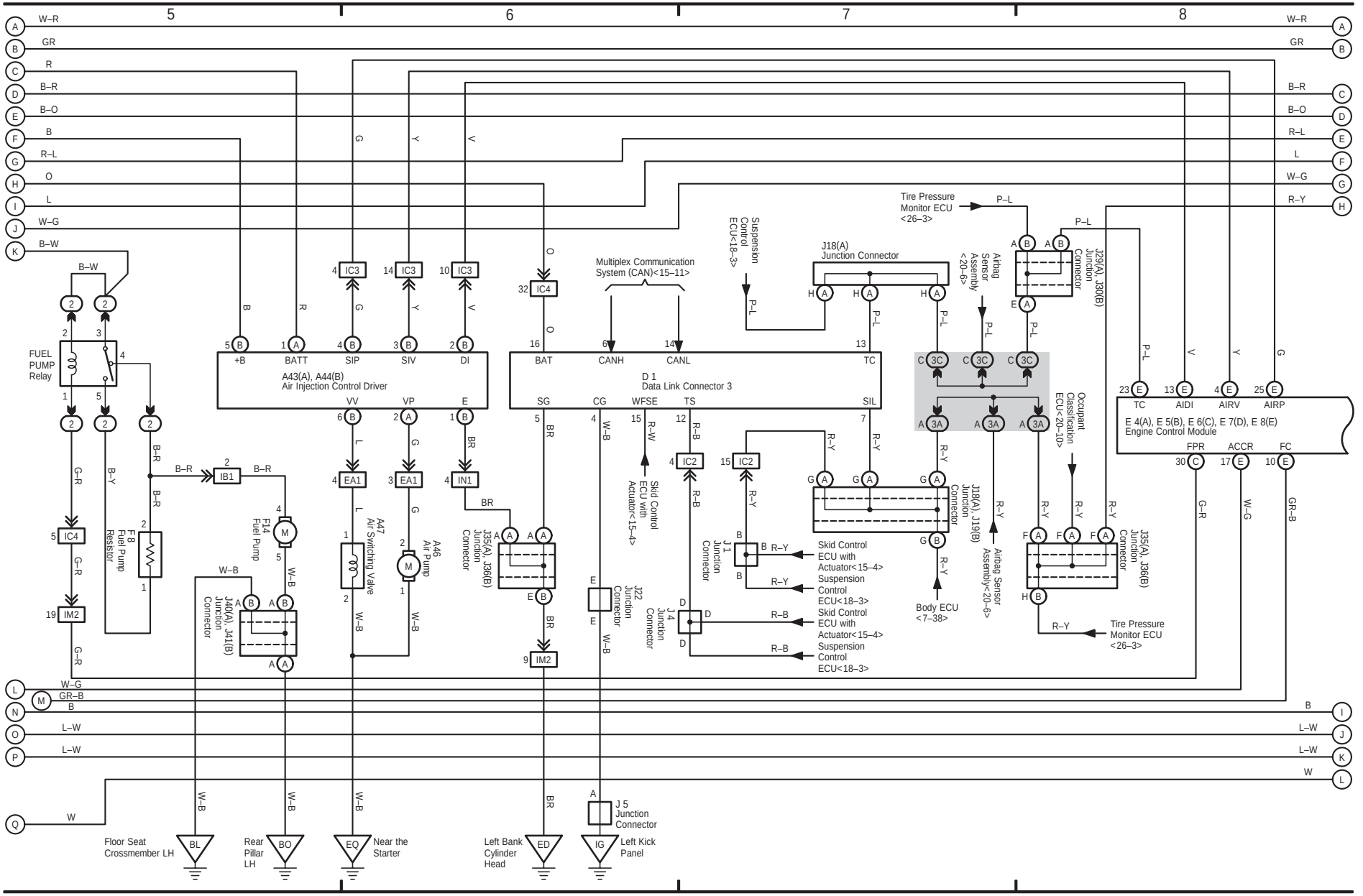

5 4RUNNER (Cont' d)

(Cont. next page)

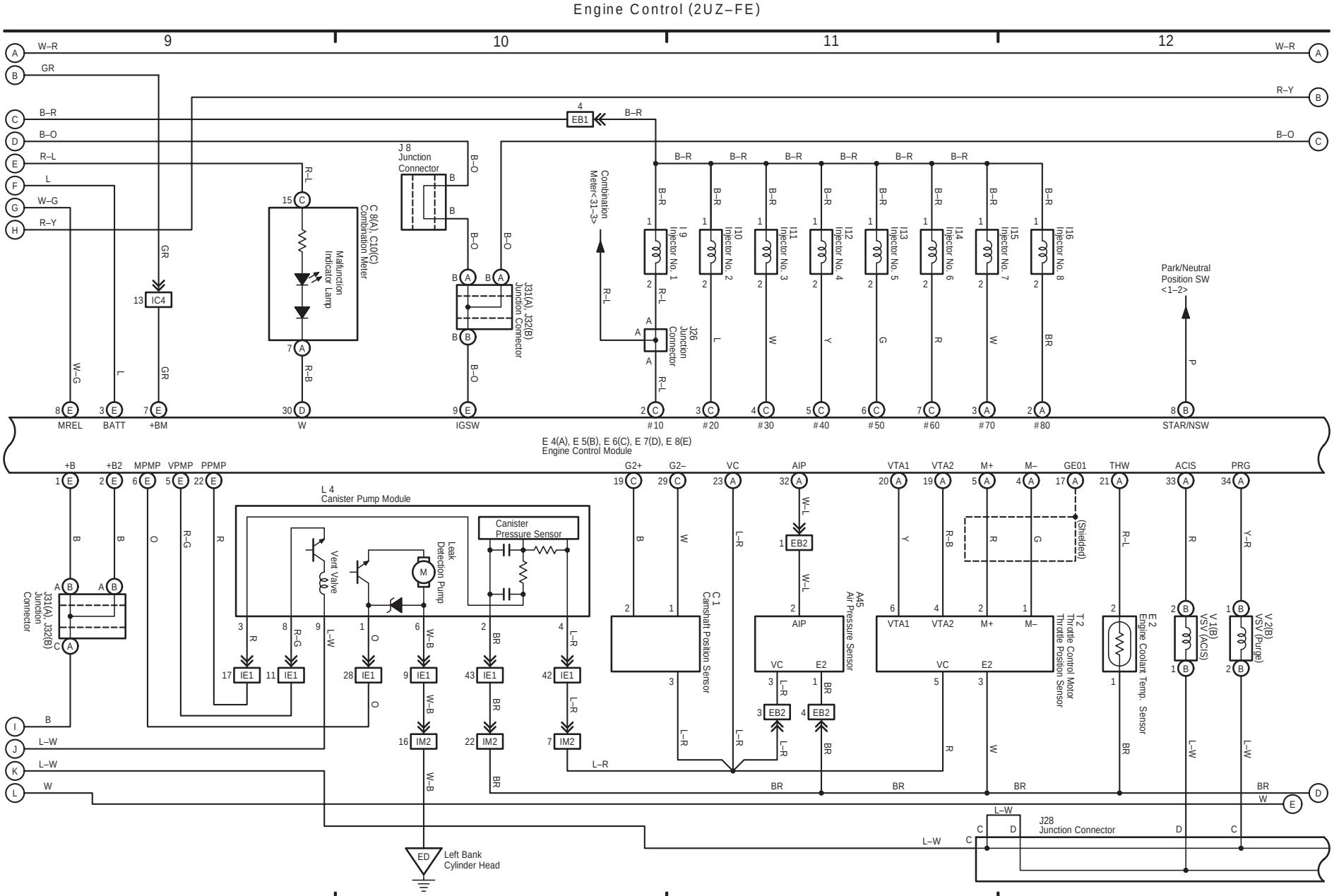

(Cont. next page)

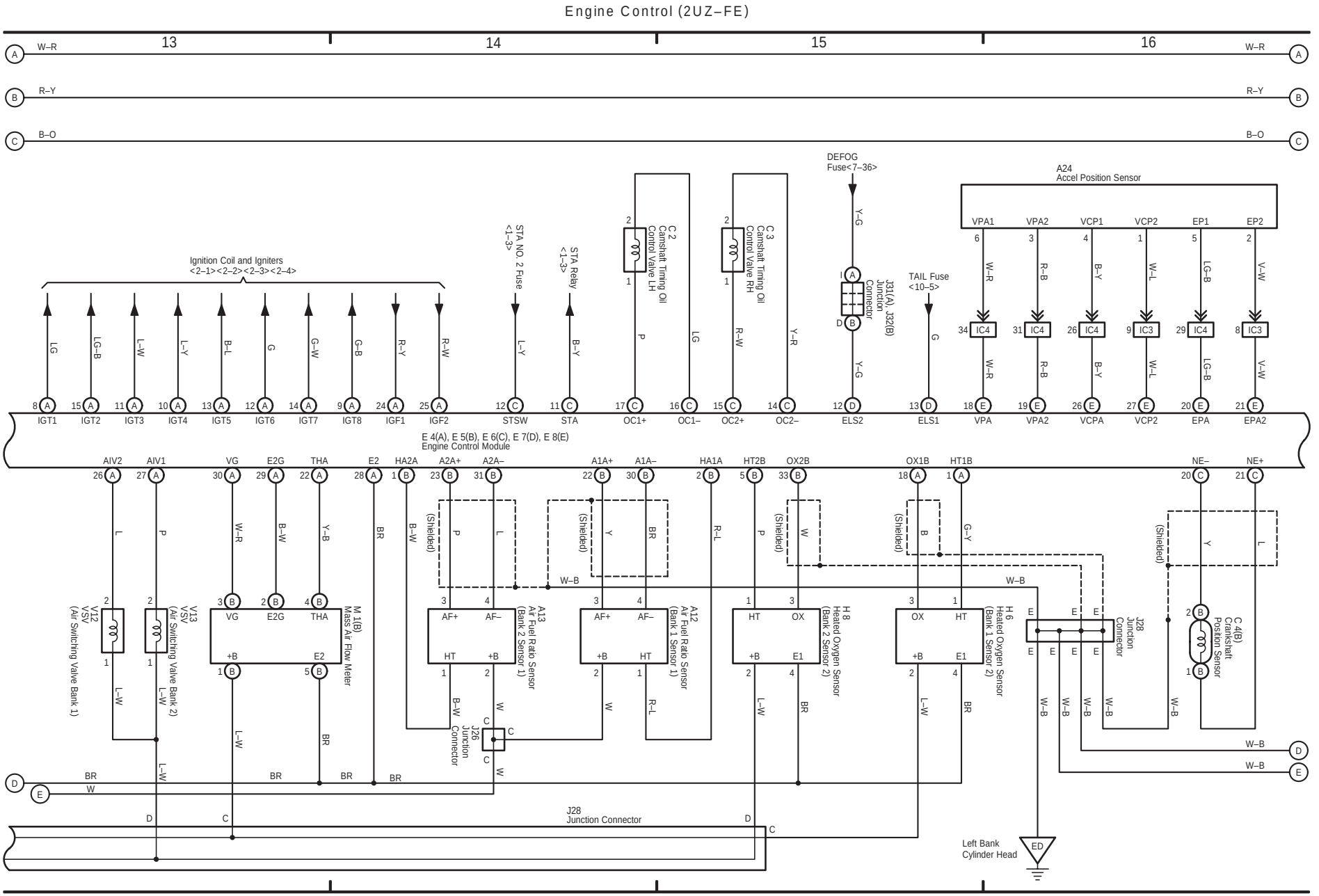

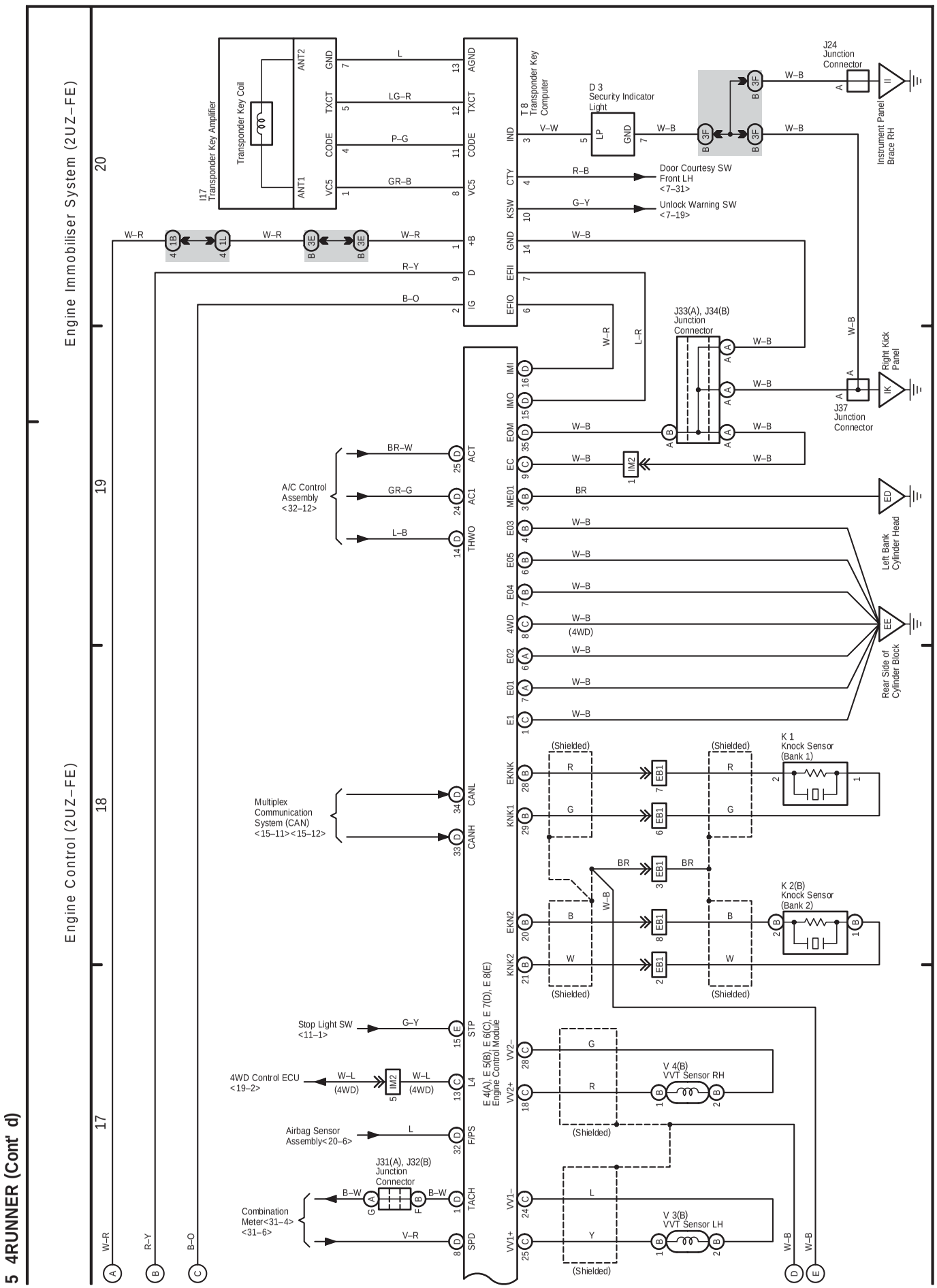
Engine Immobiliser System (2UZ–FE)
Engine Control (2UZ–FE)
5 4RUNNER (Cont' d)
I17 Transponder Key Amplifier
Transponder Key Coil
T 8 Transponder Key Computer
D 3 Security Indicator Light
J24 Junction Connector
Instrument Panel Brace RH
Door Courtesy SW Front LH <7–31>
Unlock Warning SW <7–19>
J33(A), J34(B) Junction Connector
J37 Junction Connector
Right Kick Panel
A/C Control Assembly <32–12>
Left Bank Cylinder Head
Rear Side of Cylinder Block
Multiplex Communication System (CAN) <15–11><15–12>
K 1 Knock Sensor (Bank 1)
K 2(B) Knock Sensor (Bank 2)
Stop Light SW <11–1>
4WD Control ECU <19–2>
Airbag Sensor Assembly< 20–6>
Combination Meter<31–4> <31–6>
J31(A), J32(B) Junction Connector
V 4(B) VVT Sensor RH
V 3(B) VVT Sensor LH
E 4(A), E 5(B), E 6(C), E 7(D), E 8(E) Engine Control Module
(Shielded)
(4WD)

(Cont. next page)

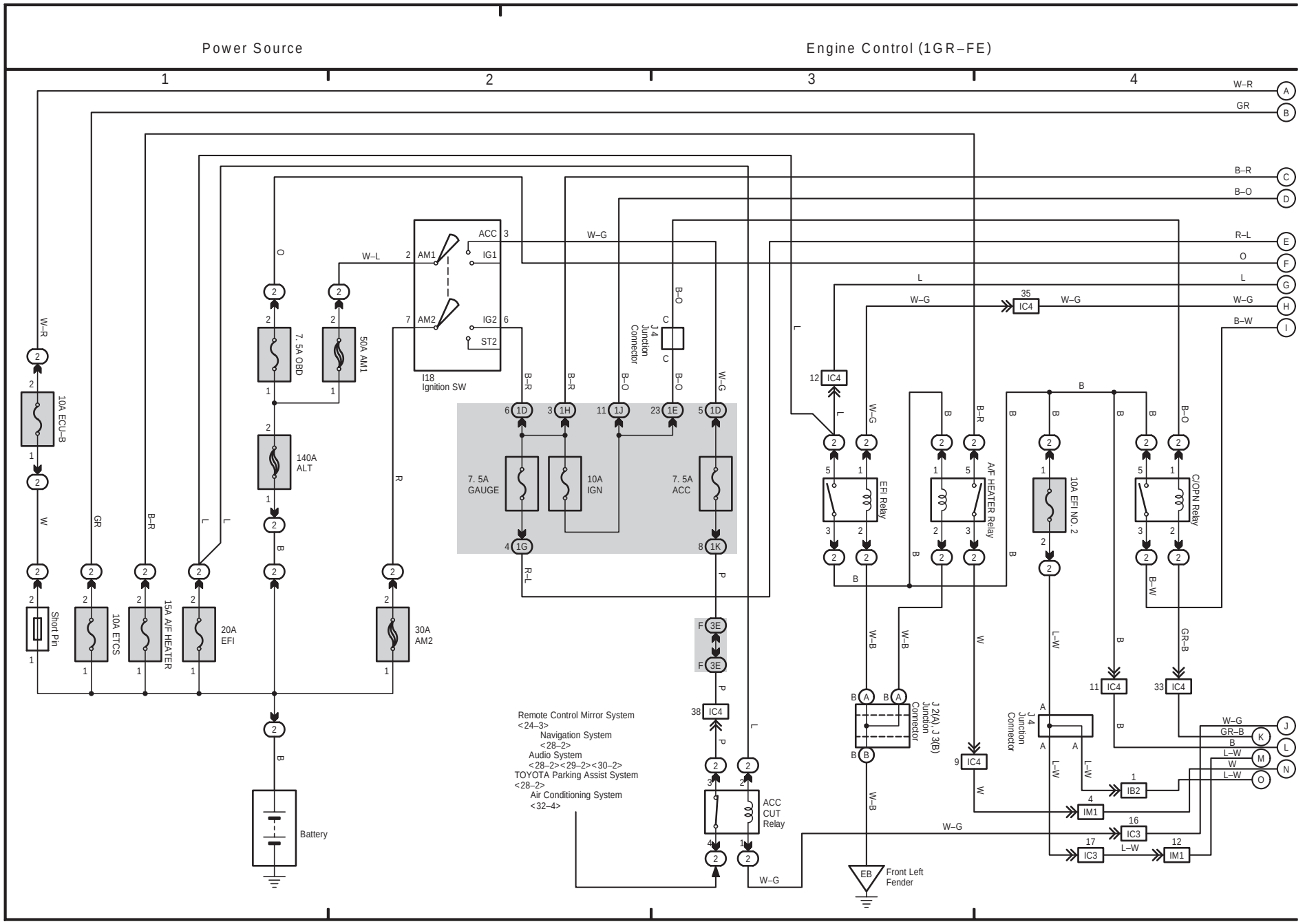

(Cont. next page)

Engine Control (1GR–FE)

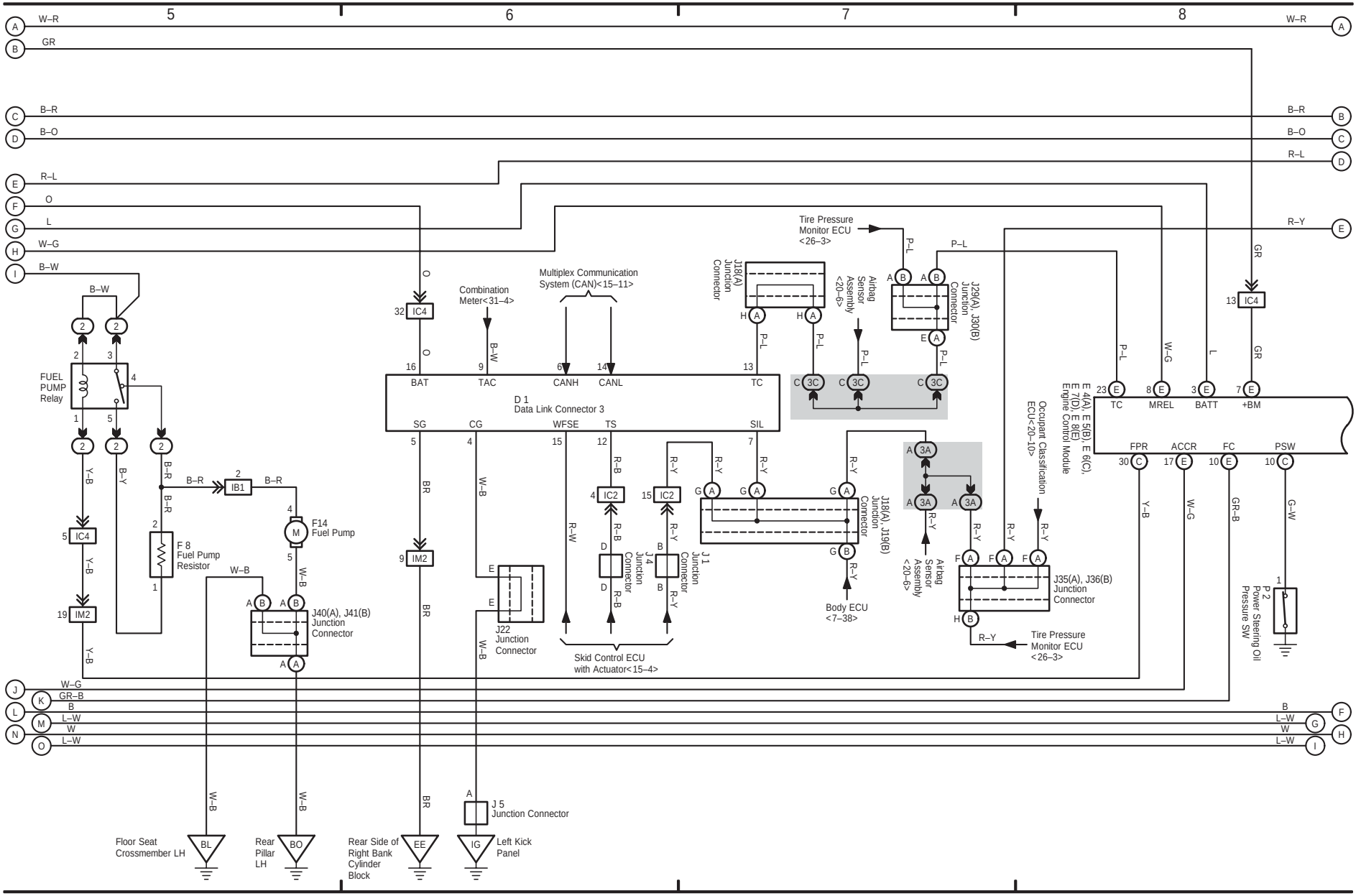

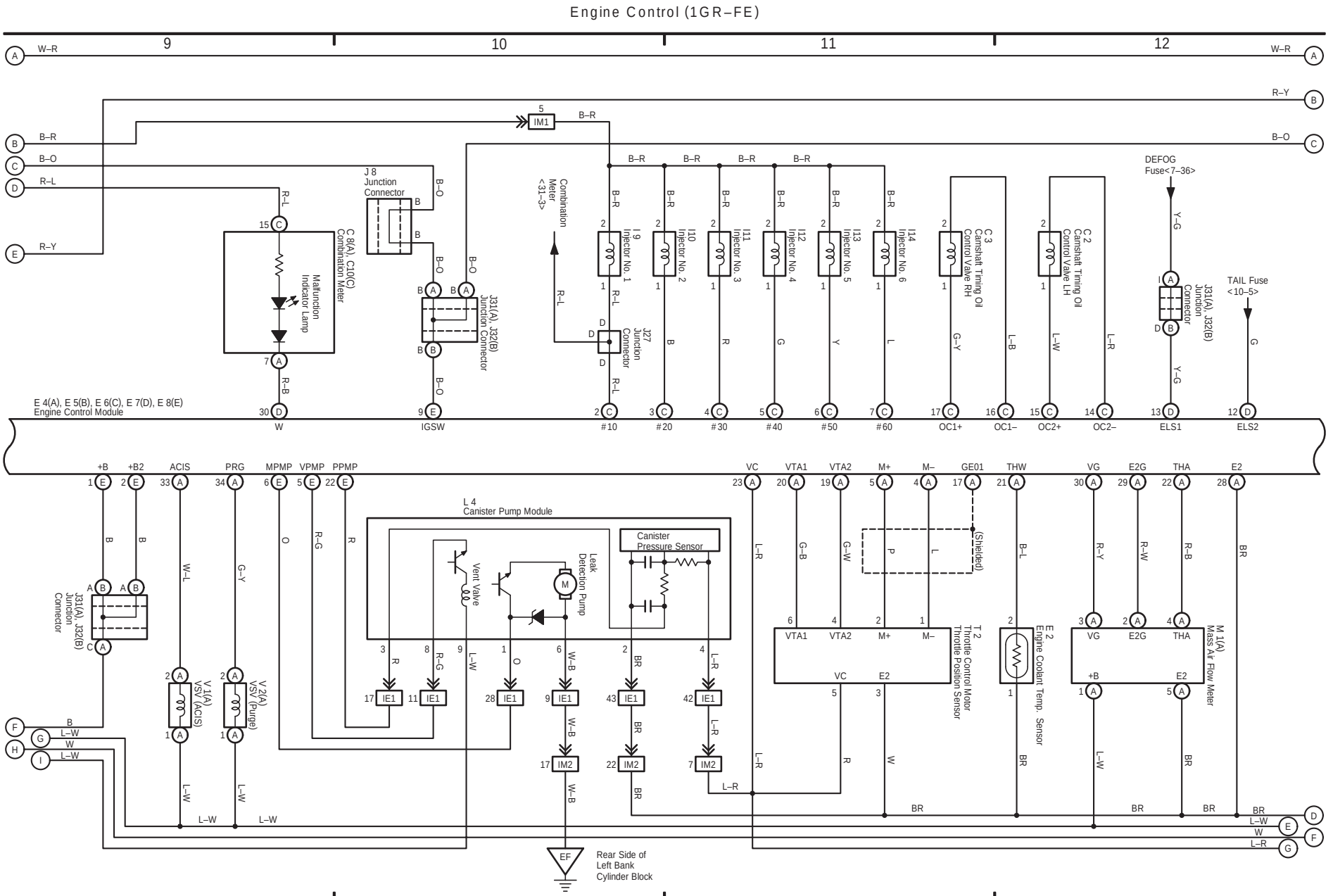
Engine Control (1GR–FE)
9
10
11
12
W–R
R–Y
B–R
B–O
R–L
B
C
D
E
A
5
IM1
J 8
Junction
Connector
C 8(A), C10(C)
Combination Meter
Malfunction
Indicator Lamp
J331(A), J32(B)
Junction Connector
Combination
Meter
<31–3>
I 9
Injector No. 1
I10
Injector No. 2
I11
Injector No. 3
I12
Injector No. 4
I13
Injector No. 5
I14
Injector No. 6
J27
Junction
Connector
C 3
Camshaft Timing Oil
Control Valve RH
C 2
Camshaft Timing Oil
Control Valve LH
DEFOG
Fuse<7–36>
TAIL Fuse
<10–5>
E 4(A), E 5(B), E 6(C), E 7(D), E 8(E)
Engine Control Module
W
IGSW
#10
#20
#30
#40
#50
#60
OC1+
OC1–
OC2+
OC2–
ELS1
ELS2
+B
+B2
ACIS
PRG
MPMP
VPMP
PPMP
VC
VTA1
VTA2
M+
M–
GE01
THW
VG
E2G
THA
E2
L 4
Canister Pump Module
Canister
Pressure Sensor
Vent Valve
Leak
Detection Pump
V 1(A)
VSV (ACIS)
V 2(A)
VSV (Purge)
T 2
Throttle Control Motor
Throttle Position Sensor
E 2
Engine Coolant Temp. Sensor
M 1(A)
Mass Air Flow Meter
(Shielded)
IE1
IM2
EF
Rear Side of
Left Bank
Cylinder Block

(Cont. next page)

Engine Control (1GR–FE)

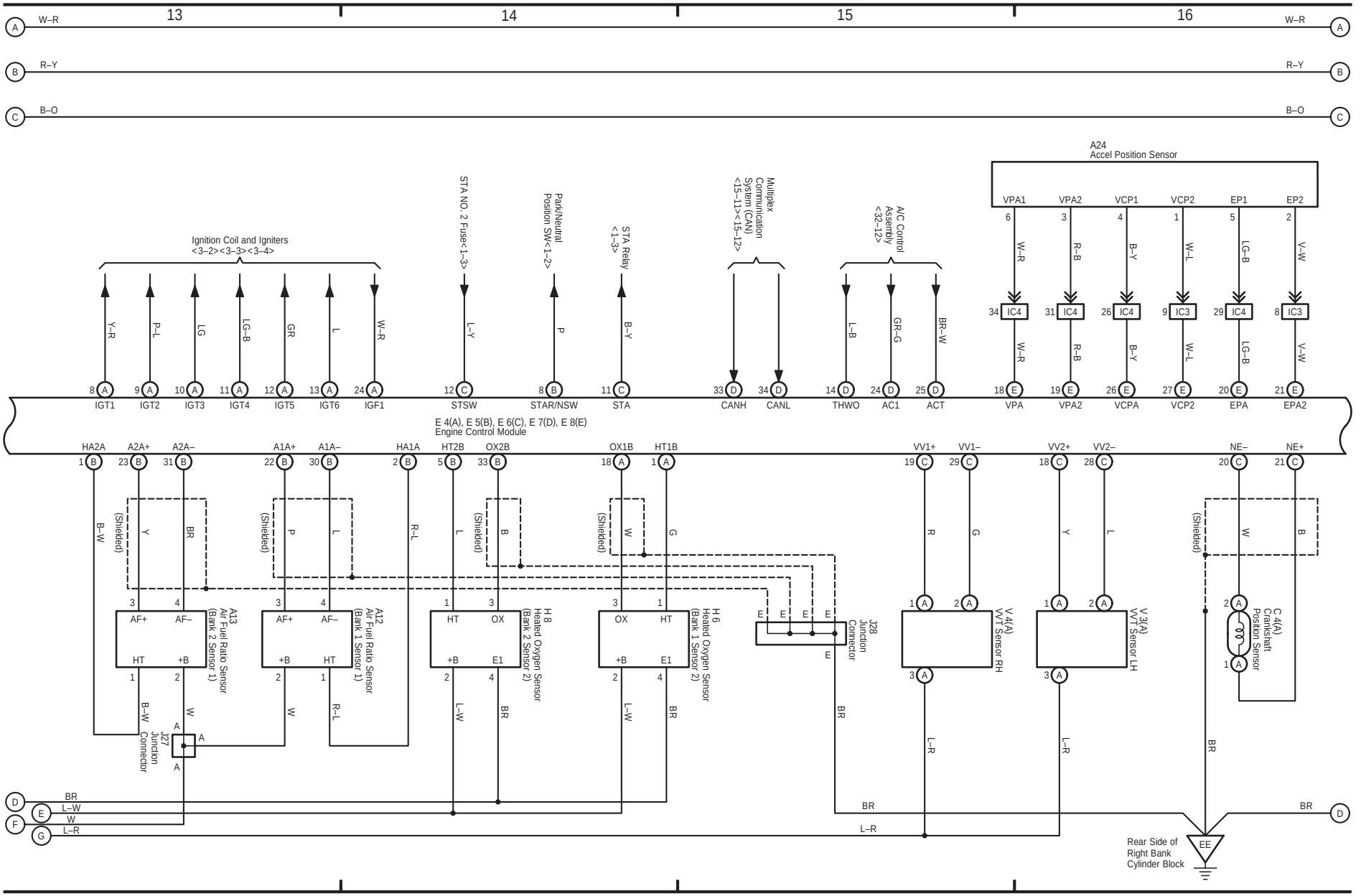

6 4RUNNER (Cont' d)

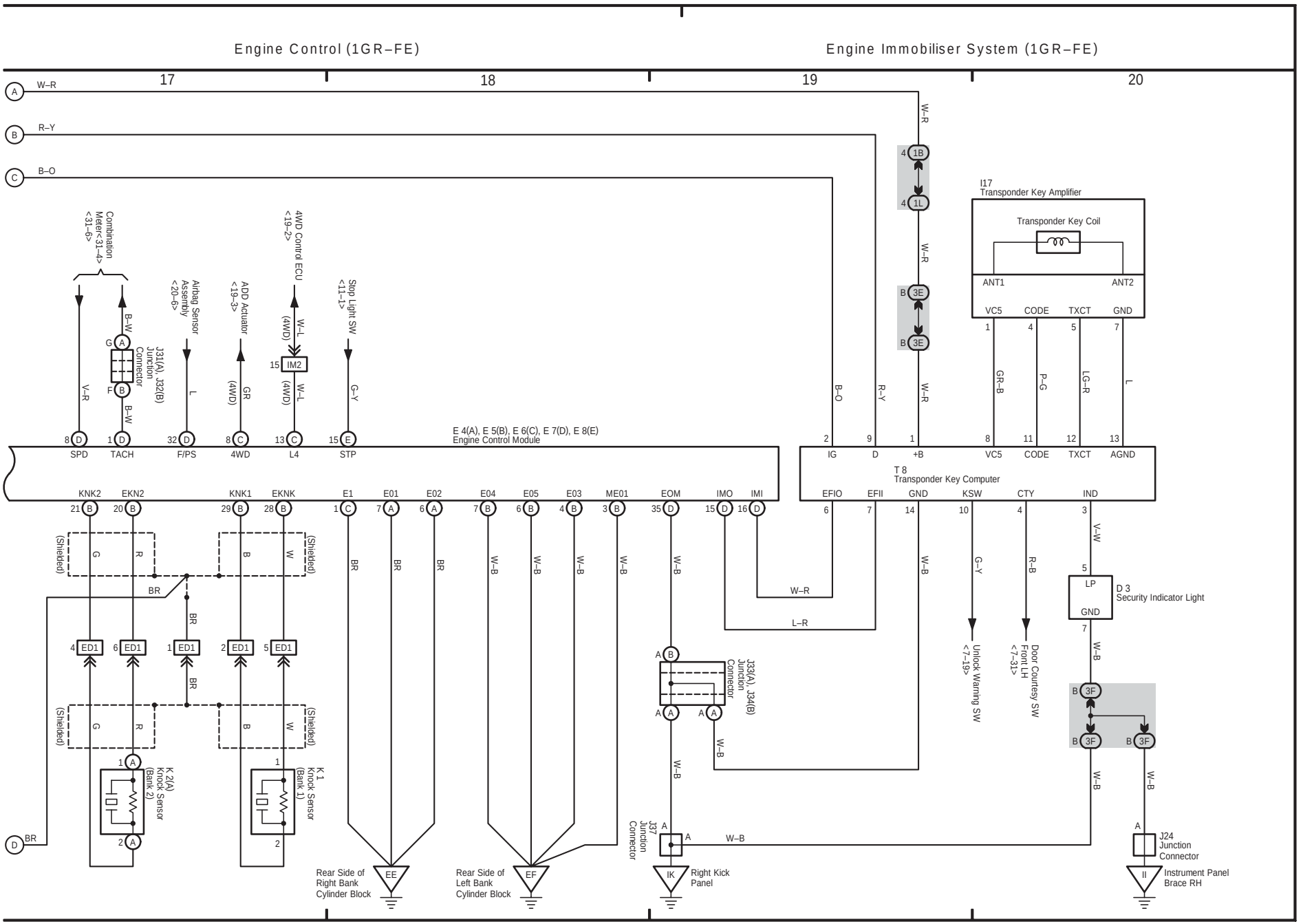

(Cont. next page)

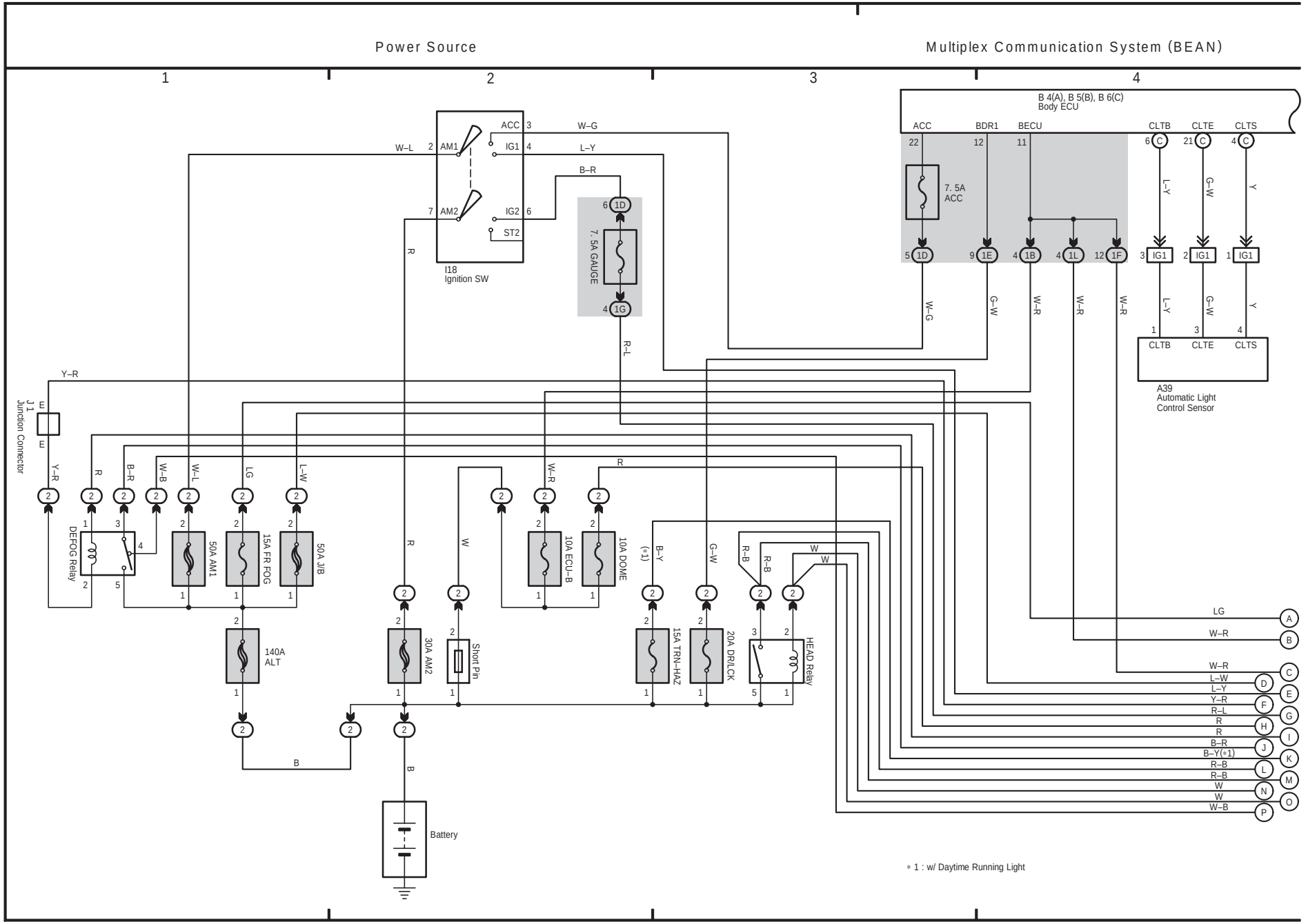

(Cont. next page)

Multiplex Communication System (BEAN)

∗ 1 : w/ Daytime Running Light
∗ 2 : Limited
∗ 3 : w/ Rear Seat Entertainment System
∗ 4 : w/o Rear Seat Entertainment System

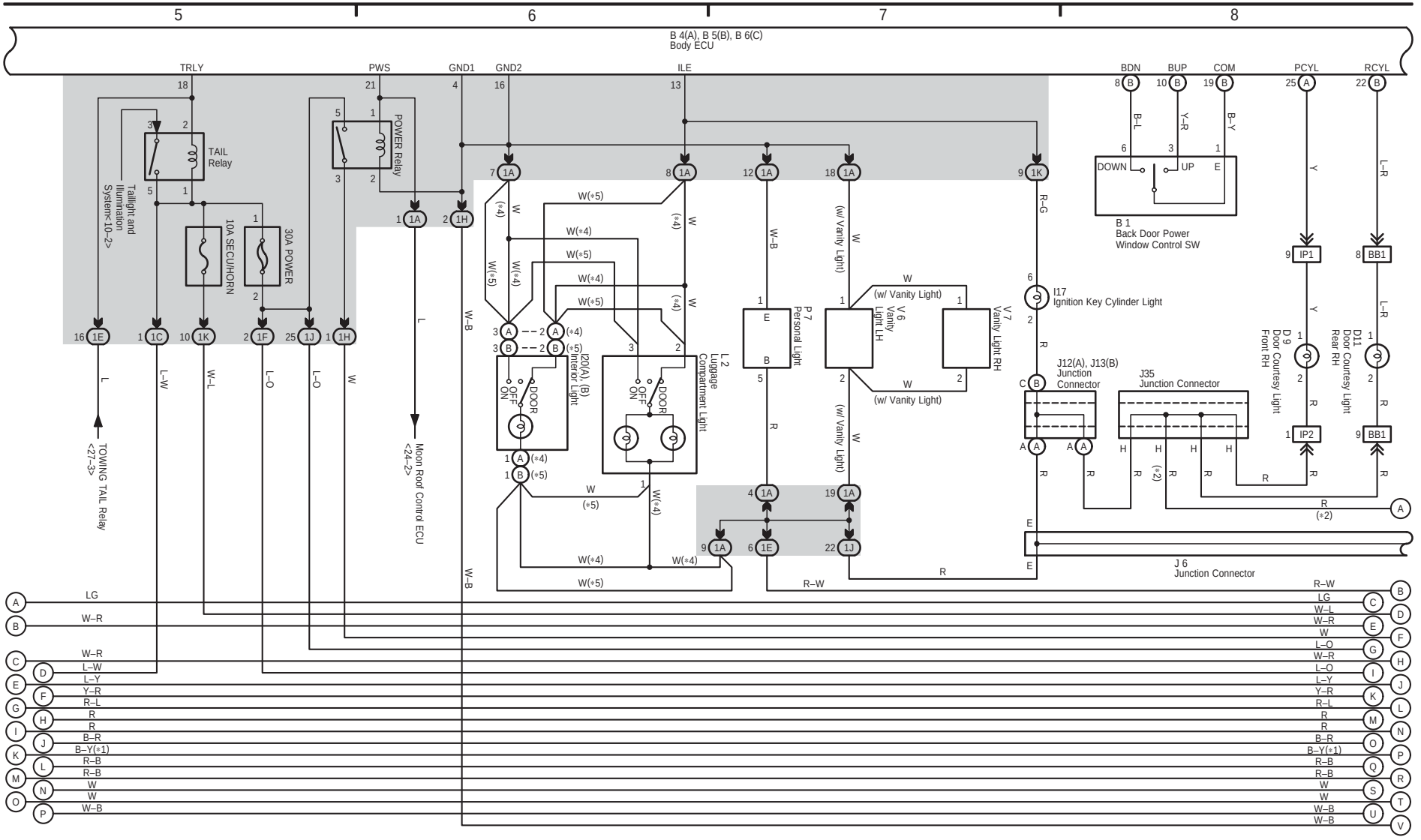

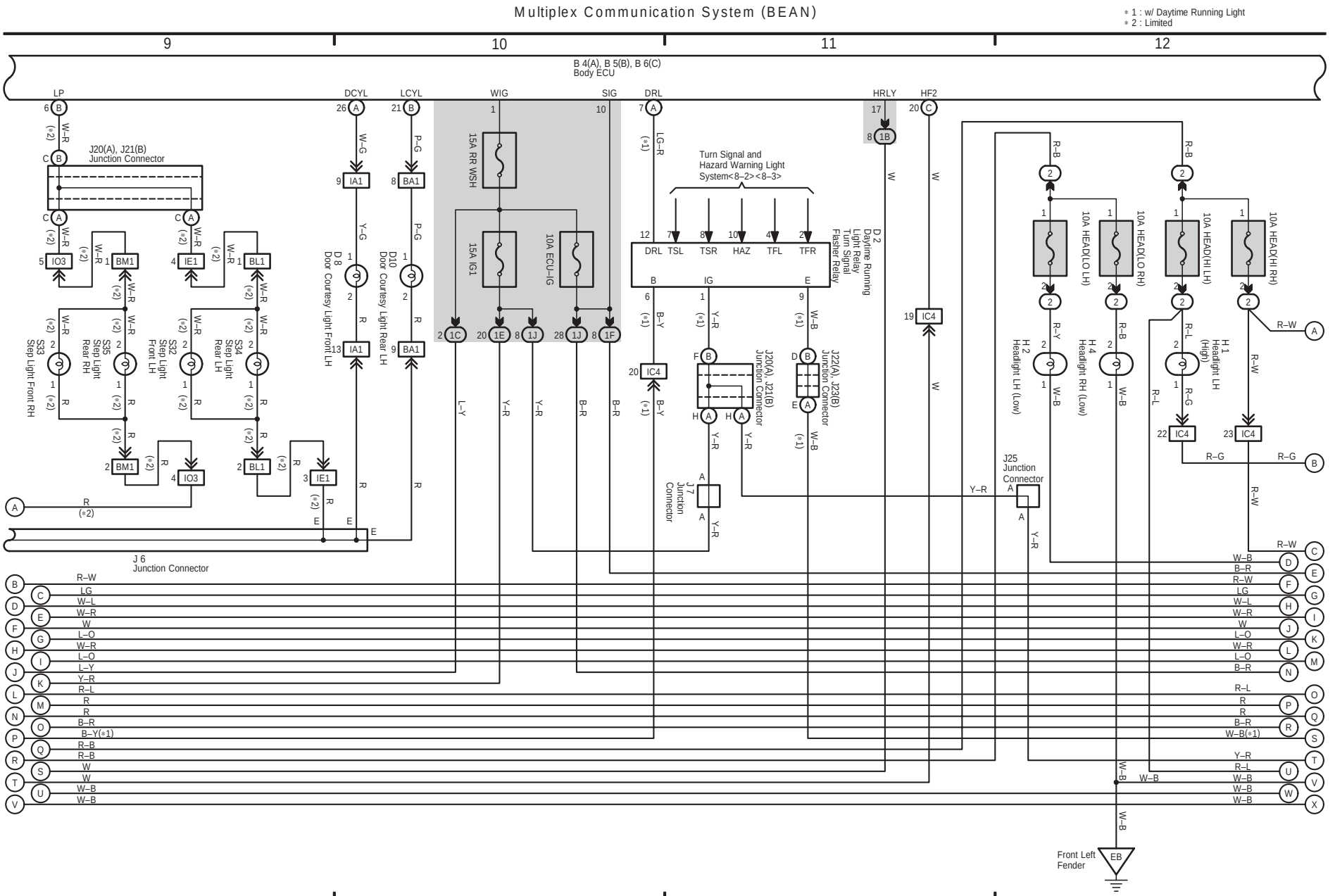
Multiplex Communication System (BEAN)
* 1 : w/ Daytime Running Light
* 2 : Limited
9
10
11
12
B 4(A), B 5(B), B 6(C)
Body ECU
LP
DCYL
LCYL
WIG
SIG
DRL
HRLY
HF2
J20(A), J21(B)
Junction Connector
15A RR WSH
15A IG1
10A ECU-IG
Turn Signal and
Hazard Warning Light
System<8–2><8–3>
DRL TSL TSR HAZ TFL TFR
D 2
Daytime Running
Light Relay
Turn Signal
Flasher Relay
10A HEAD(LO LH)
10A HEAD(LO RH)
10A HEAD(HI LH)
10A HEAD(HI RH)
H 2
Headlight LH (Low)
H 4
Headlight RH (Low)
H 1
Headlight LH
(High)
D 8
Door Courtesy Light Front LH
D 10
Door Courtesy Light Rear LH
S33
Step Light Front RH
S35
Step Light
Rear RH
S32
Step Light
Front LH
S34
Step Light
Rear LH
J 6
Junction Connector
J 7
Junction
Connector
J22(A), J23(B)
Junction Connector
J25
Junction
Connector
Front Left
Fender
EB

(Cont. next page)

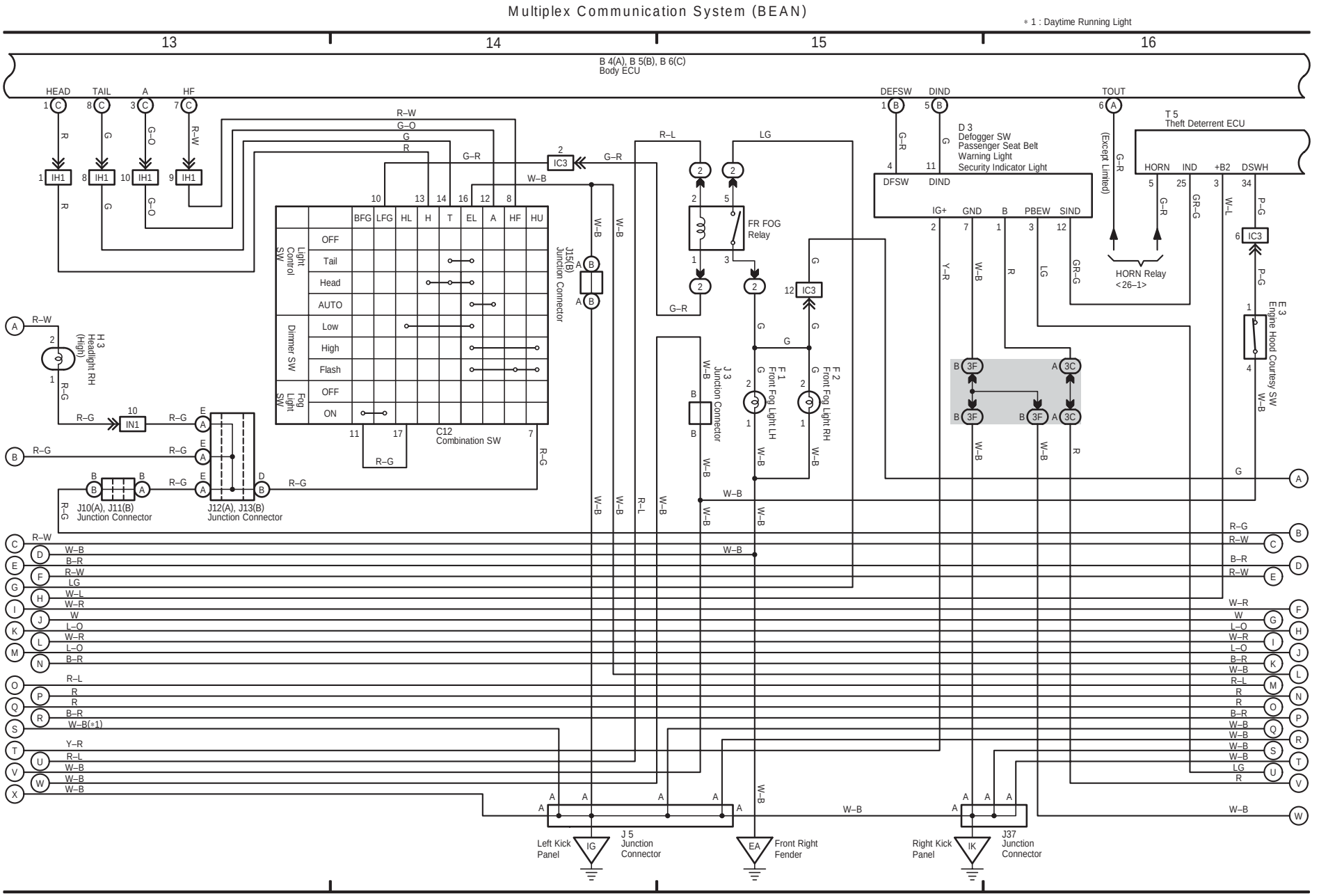

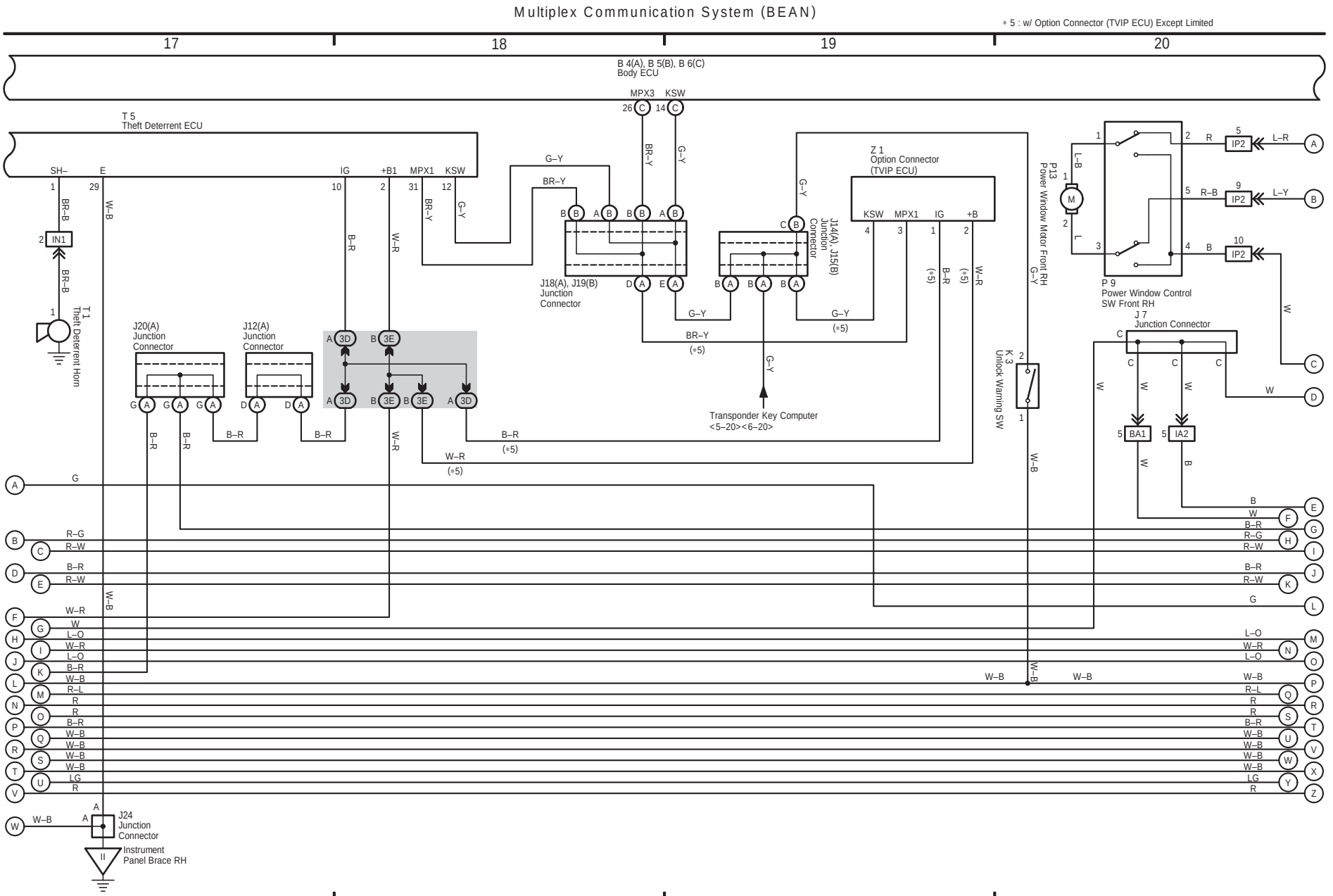
Multiplex Communication System (BEAN)
* 5 : w/ Option Connector (TVIP ECU) Except Limited
17
18
19
20
B 4(A), B 5(B), B 6(C)
Body ECU
MPX3
KSW
T 5
Theft Deterrent ECU
SH–
E
IG
+B1
MPX1
KSW
Z 1
Option Connector
(TVIP ECU)
P13
Power Window Motor Front RH
P 9
Power Window Control
SW Front RH
J 7
Junction Connector
J18(A), J19(B)
Junction
Connector
J114(A), J115(B)
Junction
Connector
J20(A)
Junction
Connector
J12(A)
Junction
Connector
T 1
Theft Deterrent Horn
K 3
Unlock Warning SW
Transponder Key Computer
<5–20><6–20>
J24
Junction
Connector
Instrument
Panel Brace RH

(Cont. next page)

Multiplex Communication System (BEAN)

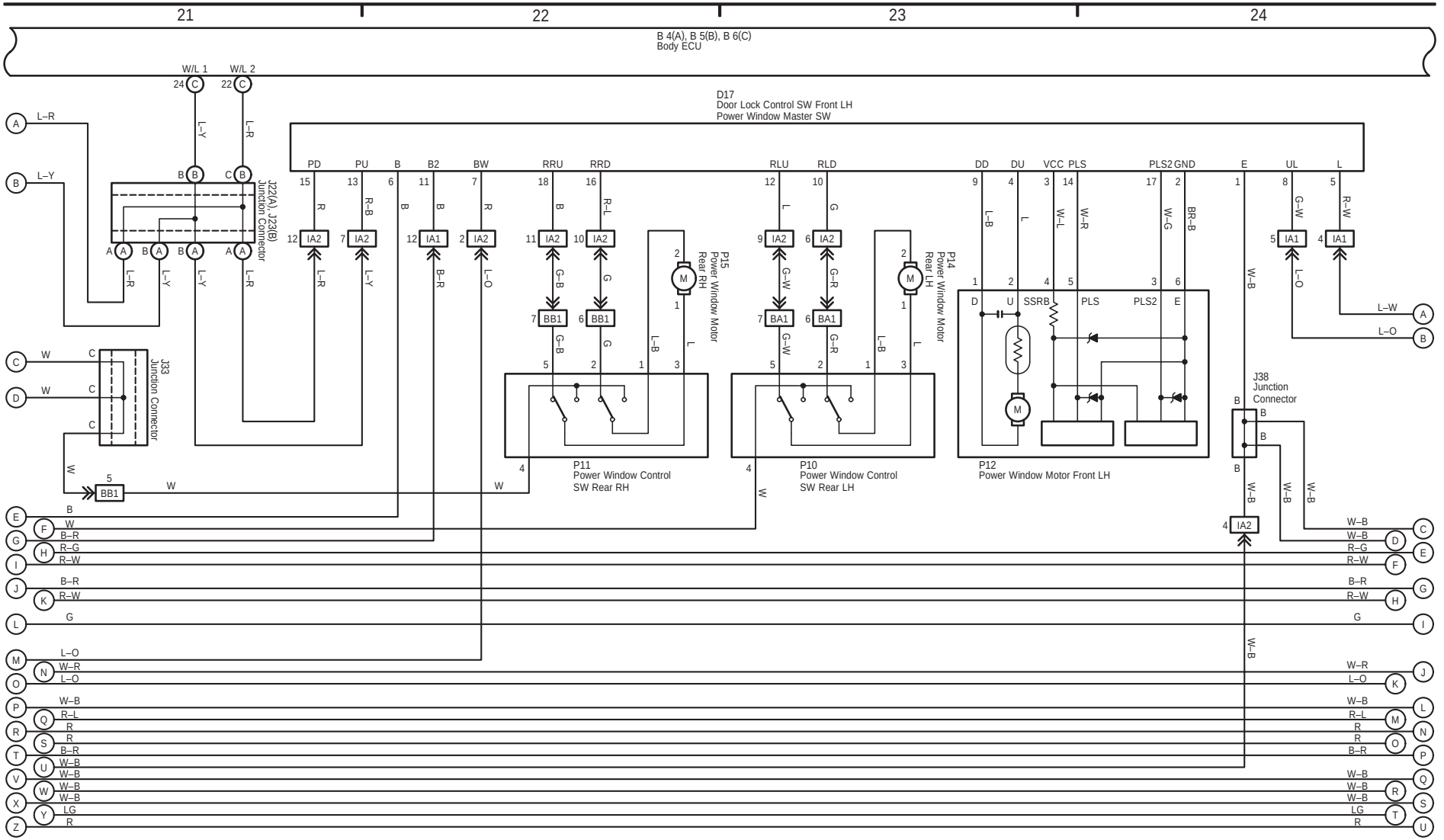

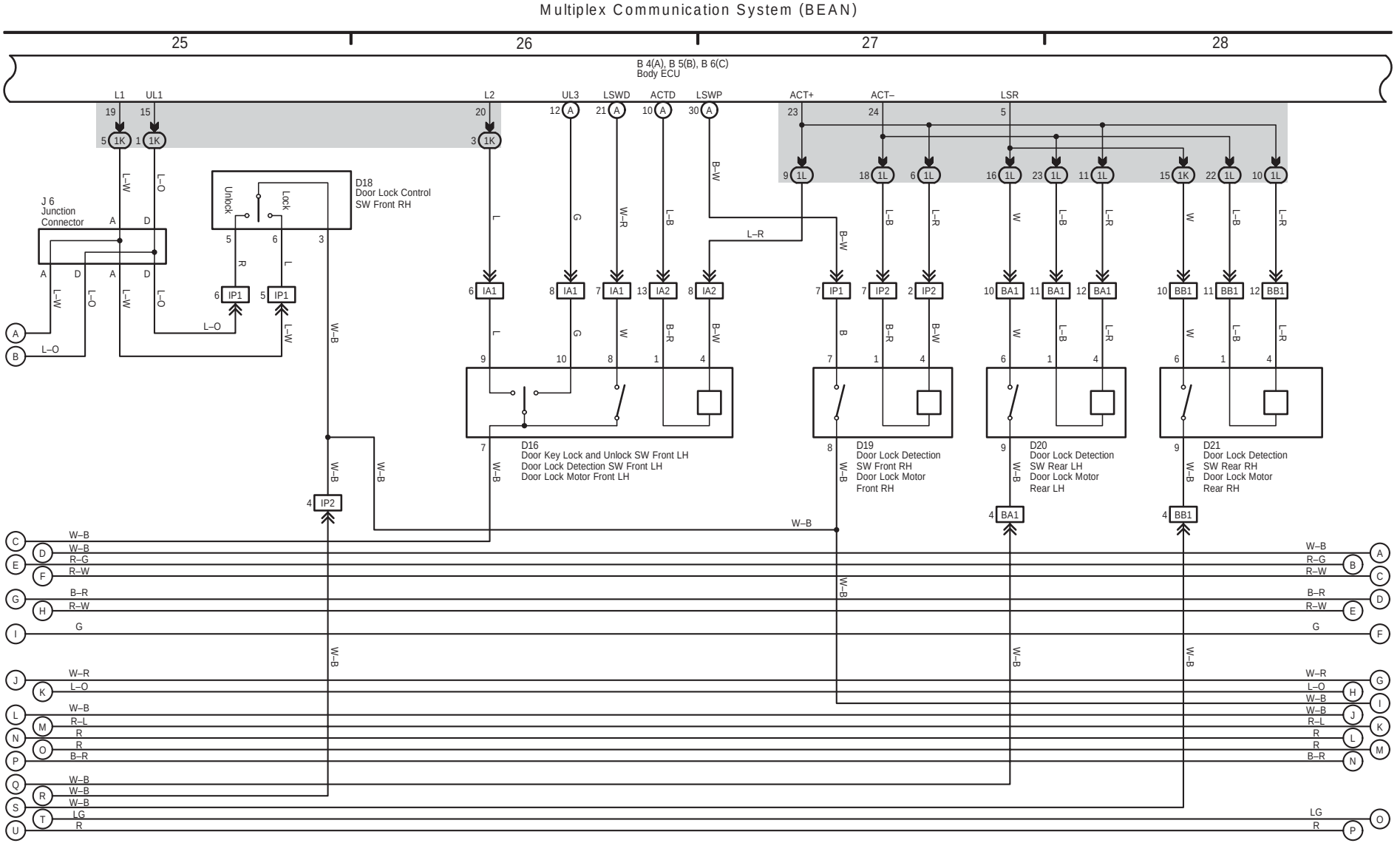
Multiplex Communication System (BEAN)
25
26
27
28
B 4(A), B 5(B), B 6(C)
Body ECU
L1
UL1
L2
UL3
LSWD
ACTD
LSWP
ACT+
ACT–
LSR
J 6
Junction
Connector
D18
Door Lock Control
SW Front RH
Unlock
Lock
D16
Door Key Lock and Unlock SW Front LH
Door Lock Detection SW Front LH
Door Lock Motor Front LH
D19
Door Lock Detection
SW Front RH
Door Lock Motor
Front RH
D20
Door Lock Detection
SW Rear LH
Door Lock Motor
Rear LH
D21
Door Lock Detection
SW Rear RH
Door Lock Motor
Rear RH

(Cont. next page)

Multiplex Communication System (BEAN)

* 6 : w/ Driving Position Memory

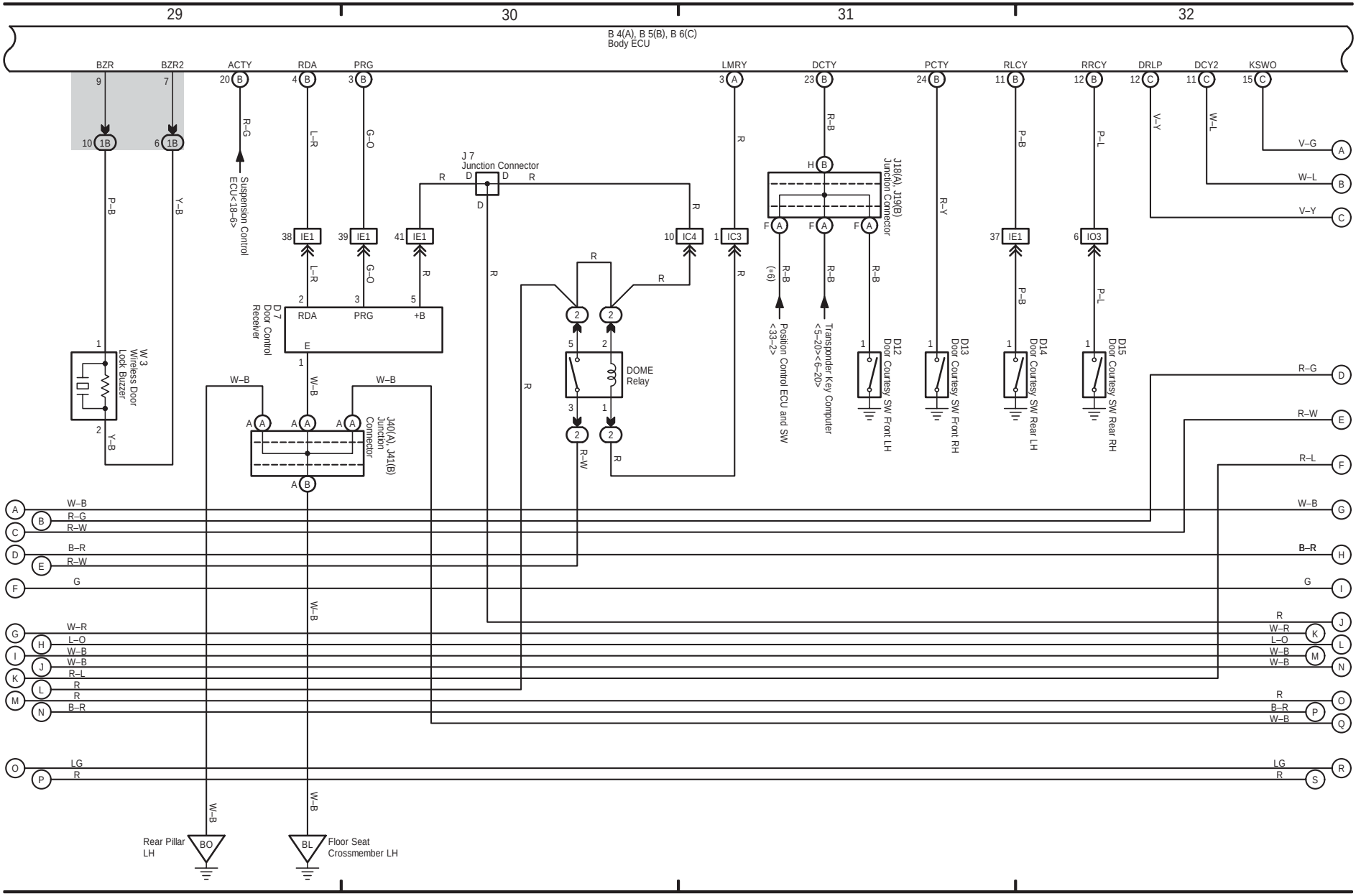

7 4RUNNER (Cont' d)

(Cont. next page)

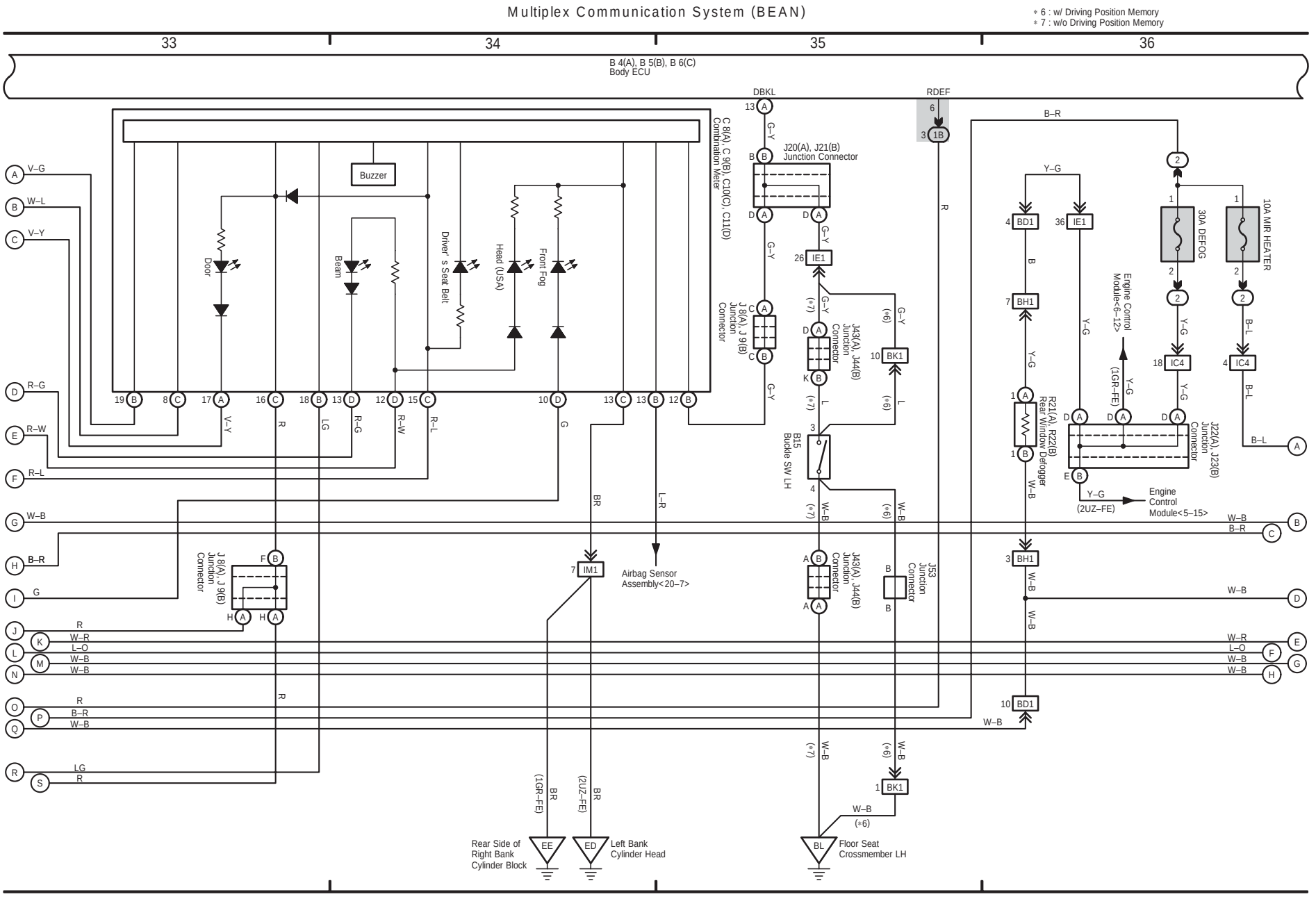

(Cont. next page)

Multiplex Communication System (BEAN)

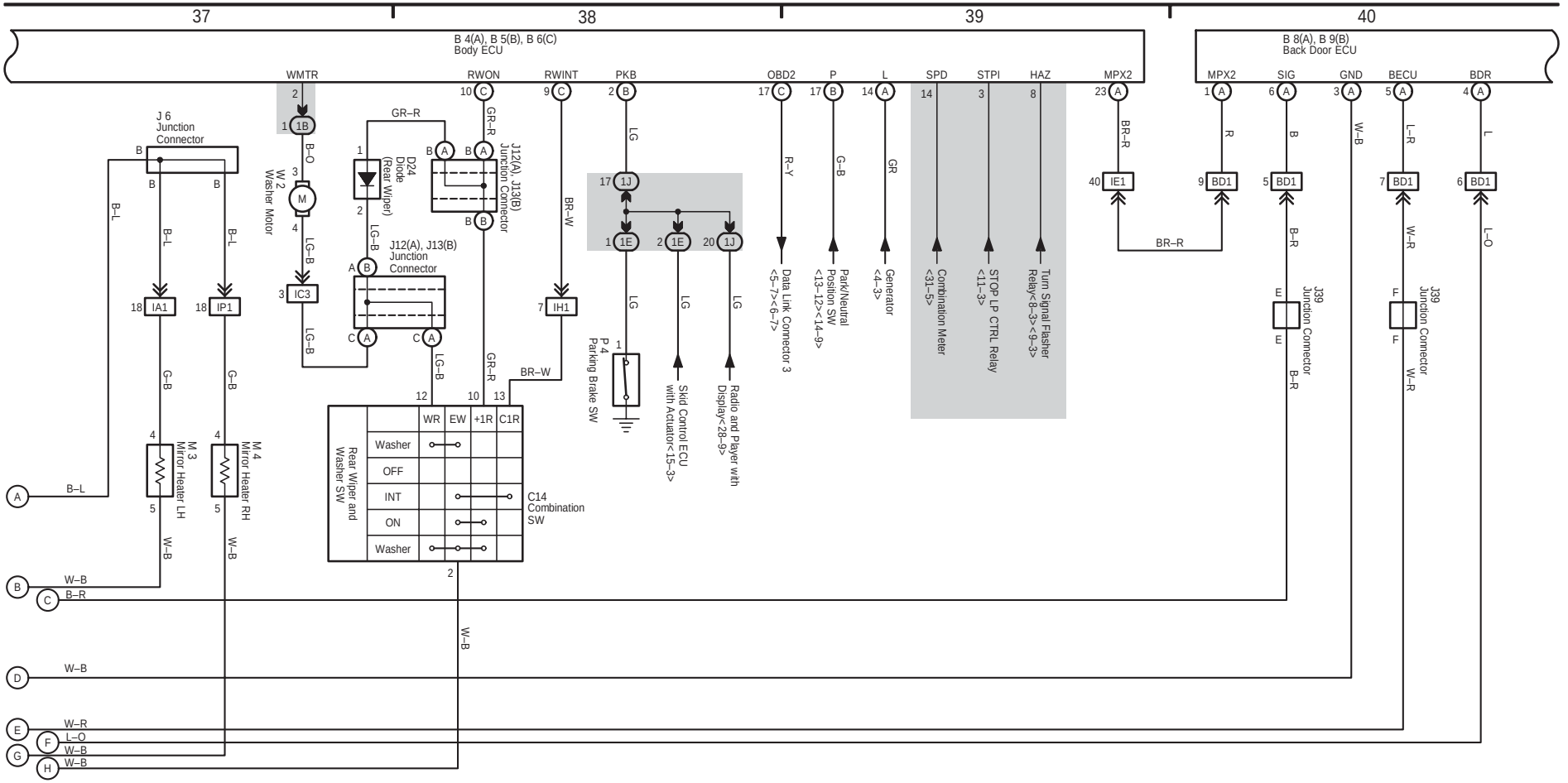

7 4RUNNER (Cont' d)

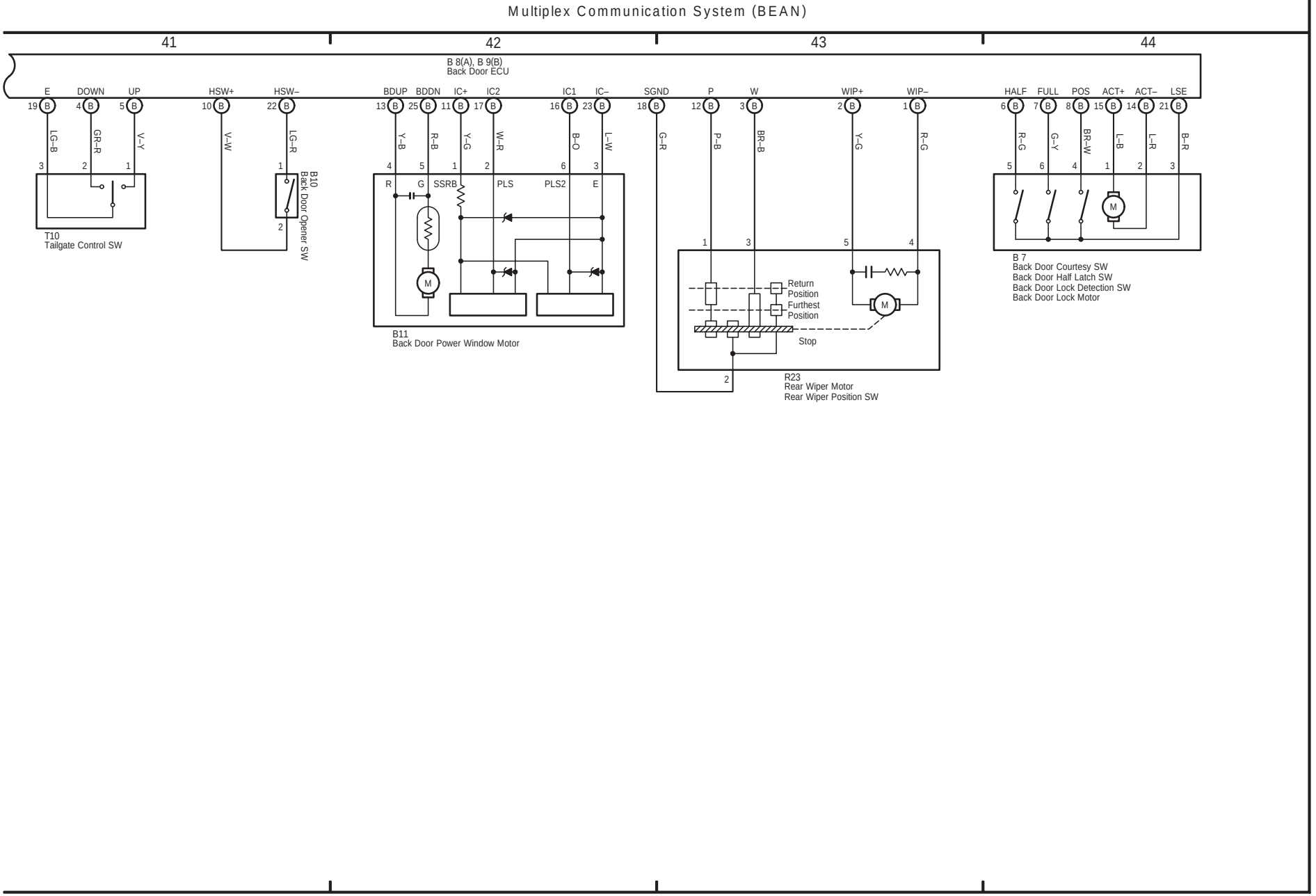

8 4RUNNER

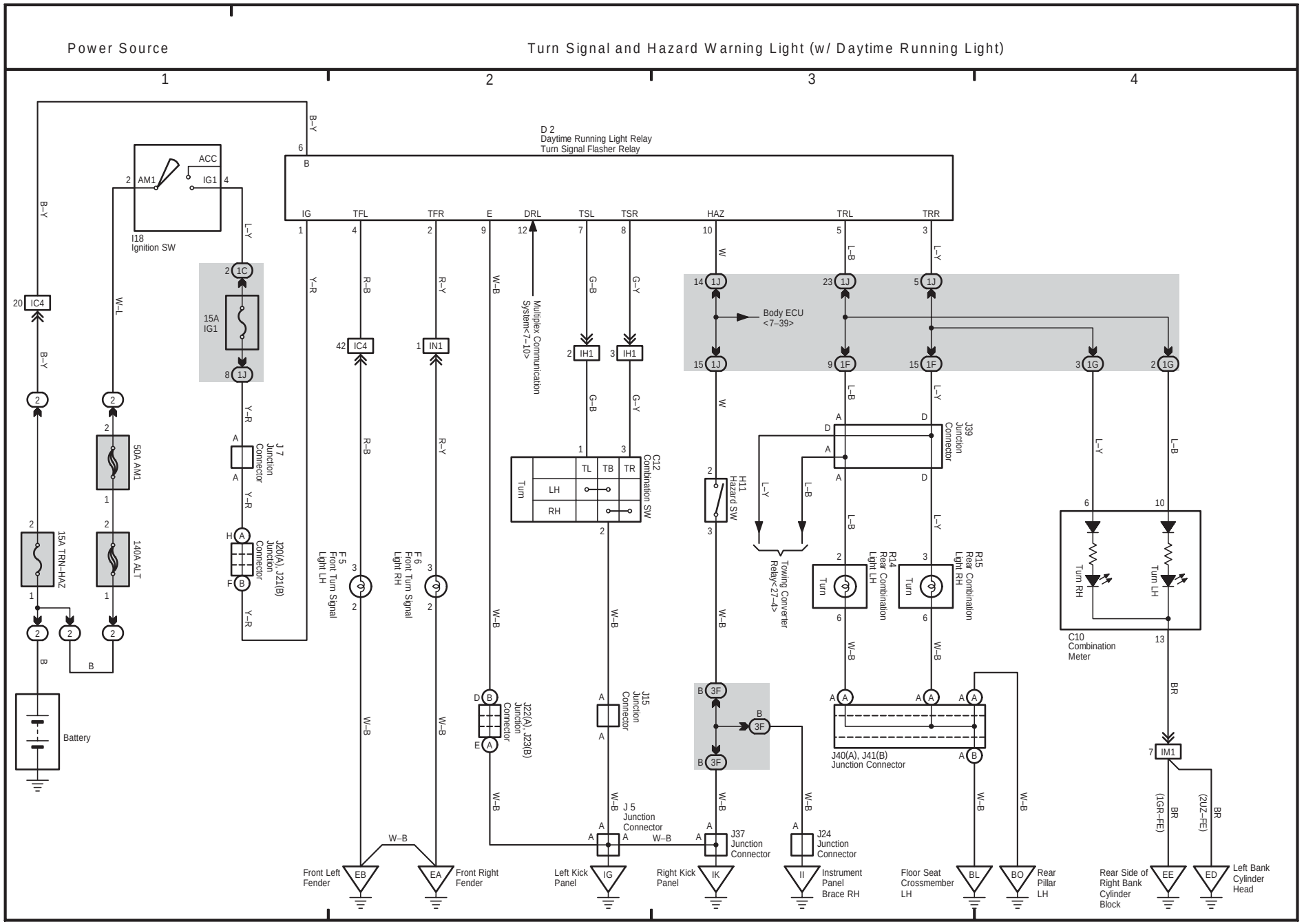
Power Source
Turn Signal and Hazard Warning Light (w/ Daytime Running Light)
1
2
3
4
D 2
Daytime Running Light Relay
Turn Signal Flasher Relay
IG
TFL
TFR
E
DRL
TSL
TSR
HAZ
TRL
TRR
I18
Ignition SW
ACC
AM1
IG1
15A
IG1
50A AM1
15A TRN–HAZ
140A ALT
Battery
J 7
Junction
Connector
J20(A), J21(B)
Junction
Connector
Multiplex Communication
System<7–10>
C12
Combination SW
Turn
TL
TB
TR
LH
RH
H11
Hazard SW
Towing Converter
Relay<27–4>
Body ECU
<7–39>
J39
Junction
Connector
R14
Rear Combination
Light LH
R15
Rear Combination
Light RH
J40(A), J41(B)
Junction Connector
C10
Combination
Meter
Turn RH
Turn LH
IM1
(1GR–FE)
(2UZ–FE)
F5
Front Turn Signal
Light LH
F6
Front Turn Signal
Light RH
J22(A), J23(B)
Junction
Connector
J15
Junction
Connector
J 5
Junction
Connector
J37
Junction
Connector
J24
Junction
Connector
Front Left
Fender
Front Right
Fender
Left Kick
Panel
Right Kick
Panel
Instrument
Panel
Brace RH
Floor Seat
Crossmember
LH
Rear
Pillar
LH
Rear Side of
Right Bank
Cylinder
Block
Left Bank
Cylinder
Head
EB
EA
IG
IK
II
BL
BO
EE
ED

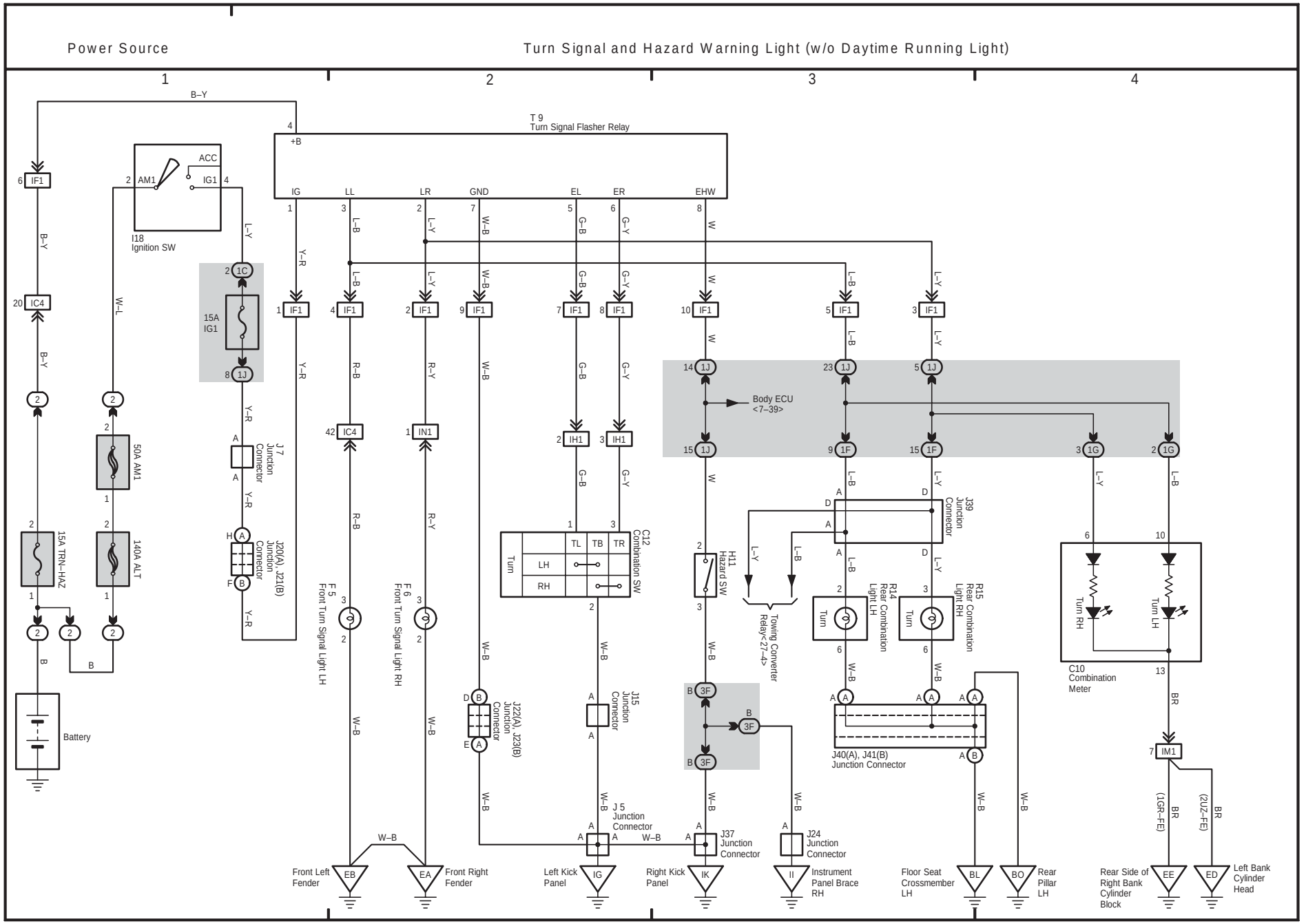
Power Source
Turn Signal and Hazard Warning Light (w/o Daytime Running Light)
1
2
3
4
B–Y
T 9
Turn Signal Flasher Relay
+B
IG
LL
LR
GND
EL
ER
EHW
ACC
AM1
IG1
I18
Ignition SW
15A
IG1
50A AM1
15A TRN–HAZ
140A ALT
Battery
J7
Junction
Connector
J20(A), J21(B)
Junction
Connector
F5
Front Turn Signal Light LH
F6
Front Turn Signal Light RH
C12
Combination SW
Turn
TL
TB
TR
LH
RH
H11
Hazard SW
Body ECU
<7–39>
Towing Converter
Relay< 27–4>
J39
Junction
Connector
R14
Rear Combination
Light LH
R15
Rear Combination
Light RH
J40(A), J41(B)
Junction Connector
C10
Combination
Meter
Turn RH
Turn LH
J22(A), J23(B)
Junction
Connector
J15
Junction
Connector
J 5
Junction
Connector
J37
Junction
Connector
J24
Junction
Connector
Front Left
Fender
Front Right
Fender
Left Kick
Panel
Right Kick
Panel
Instrument
Panel Brace
RH
Floor Seat
Crossmember
LH
Rear
Pillar
LH
Rear Side of
Right Bank
Cylinder
Block
Left Bank
Cylinder
Head
(1GR–FE)
(2UZ–FE)

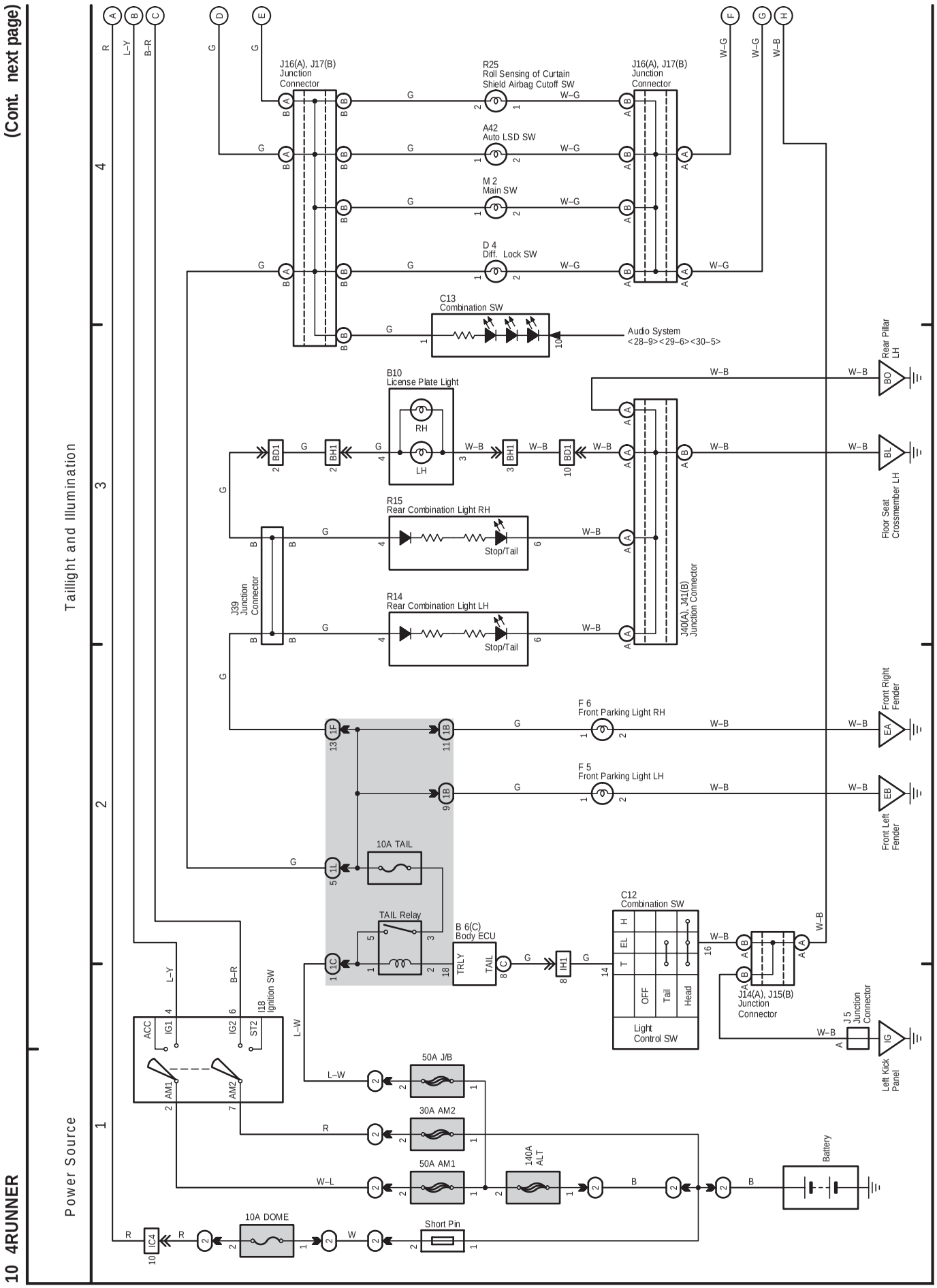
(Cont. next page)
Taillight and Illumination
Power Source
10 4RUNNER
J16(A), J17(B) Junction Connector
R25 Roll Sensing of Curtain Shield Airbag Cutoff SW
A42 Auto LSD SW
M 2 Main SW
D 4 Diff. Lock SW
C13 Combination SW
Audio System <28–9><29–6><30–5>
B10 License Plate Light
RH
LH
R15 Rear Combination Light RH
R14 Rear Combination Light LH
Stop/Tail
J39 Junction Connector
J40(A), J41(B) Junction Connector
Rear Pillar LH
Floor Seat Crossmember LH
F 6 Front Parking Light RH
F 5 Front Parking Light LH
Front Right Fender
Front Left Fender
10A TAIL
TAIL Relay
B 6(C) Body ECU
TRLY
TAIL
C12 Combination SW
Light Control SW
OFF
Tail
Head
J14(A), J15(B) Junction Connector
J5 Junction Connector
Left Kick Panel
I18 Ignition SW
ACC
IG1
IG2
ST2
AM1
AM2
50A J/B
30A AM2
50A AM1
140A ALT
Battery
10A DOME
Short Pin

(Cont. next page)

Taillight and Illumination

* 1 : w/ Navigation System
* 2 : w/o Navigation System
* 3 : Except 6 Speaker
* 4 : 6 Speaker
* 5 : w/ CD Changer
* 6 : w/o CD Changer

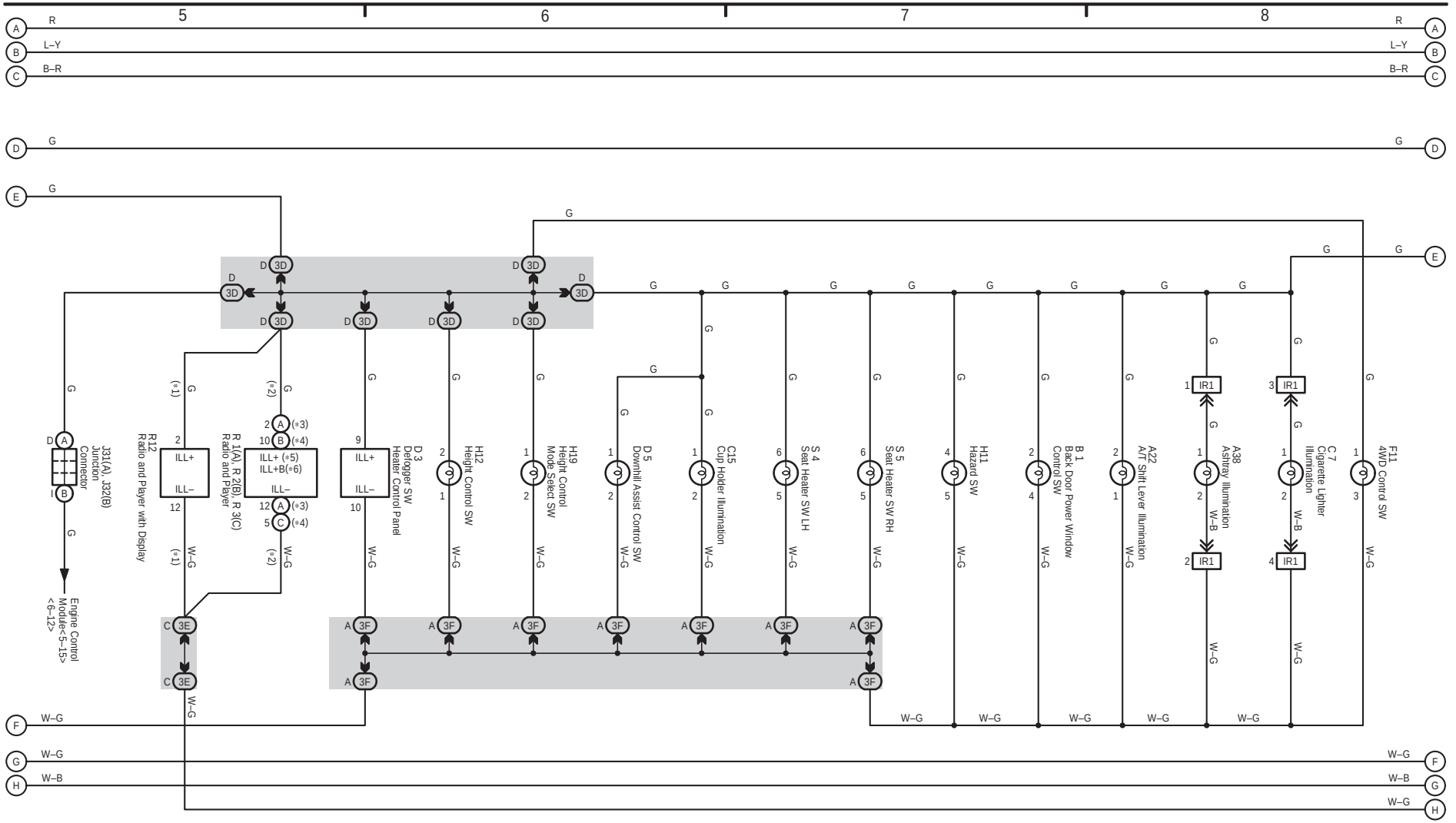

10 4RUNNER (Cont' d)

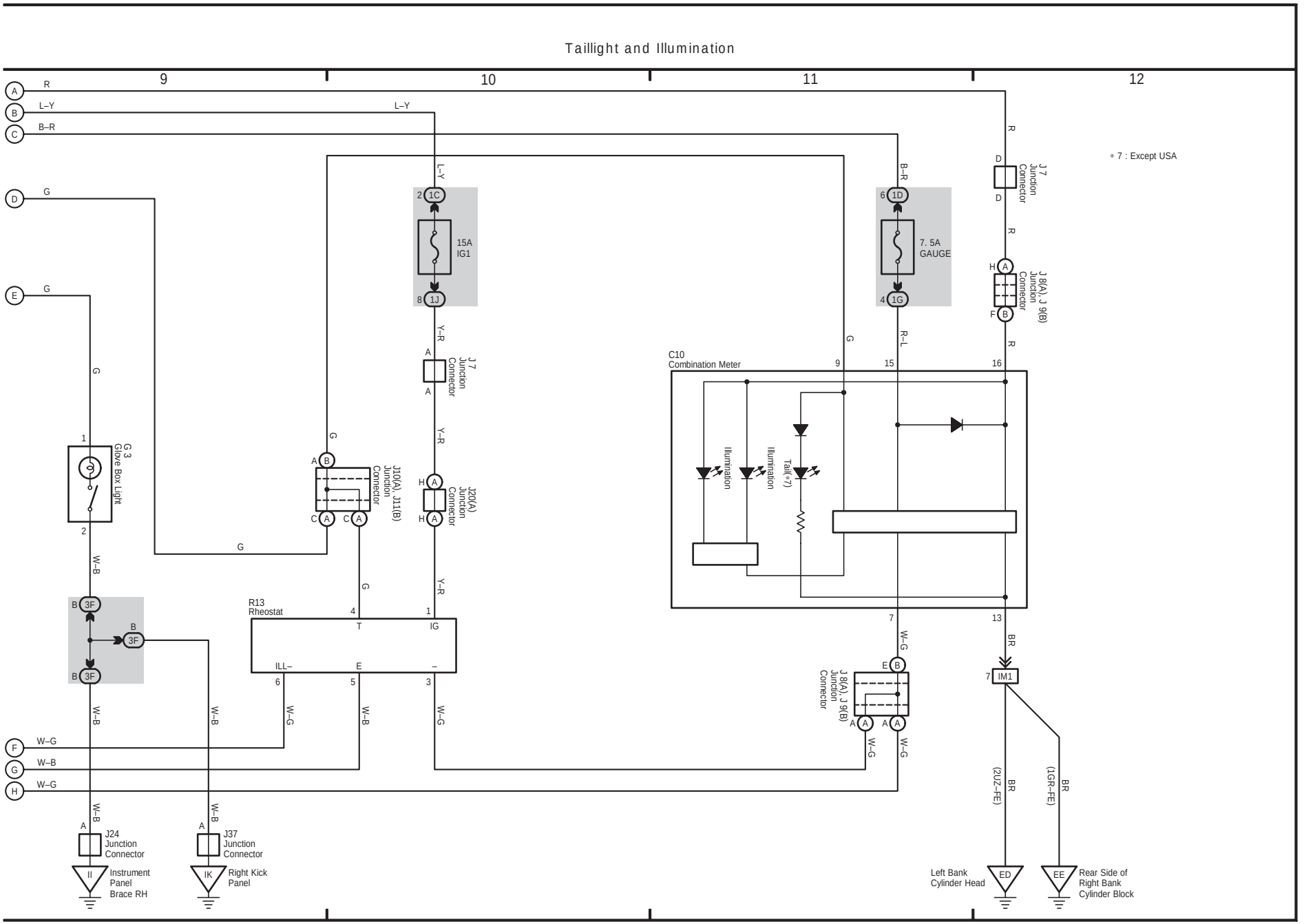

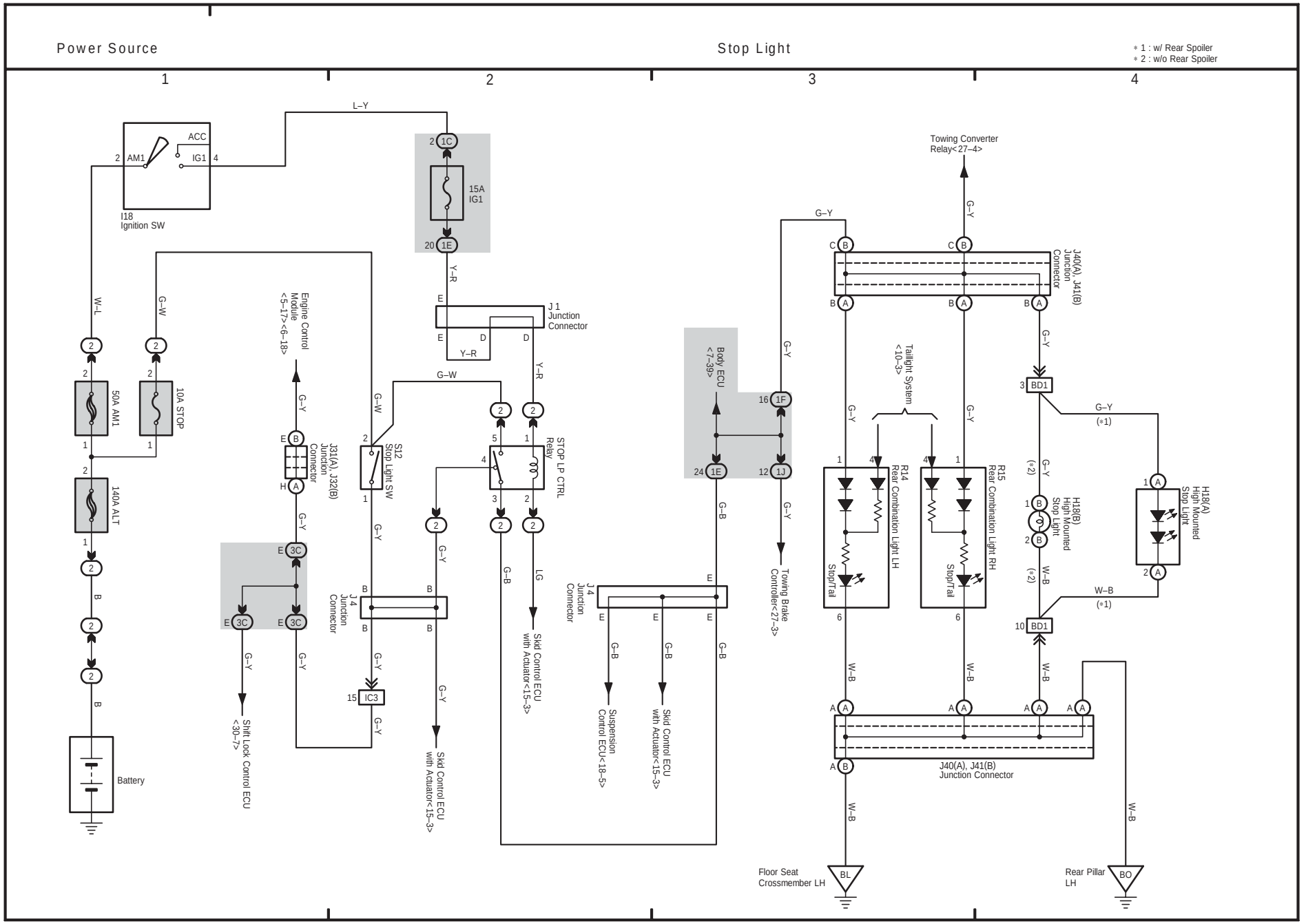
Power Source
Stop Light
* 1 : w/ Rear Spoiler
* 2 : w/o Rear Spoiler
1
2
3
4
I18
Ignition SW
ACC
AM1
IG1
15A
IG1
50A AM1
10A STOP
140A ALT
Battery
Engine Control Module <5–17><6–18>
J31(A), J32(B) Junction Connector
S12 Stop Light SW
J 1 Junction Connector
STOP LP CTRL Relay
J 4 Junction Connector
Skid Control ECU with Actuator<15–3>
Shift Lock Control ECU <30–7>
Body ECU <7–39>
Suspension Control ECU<18–5>
Towing Converter Relay< 27–4>
Towing Brake Controller<27–3>
Taillight System <10–3>
R14 Rear Combination Light LH
R15 Rear Combination Light RH
Stop/Tail
J40(A), J41(B) Junction Connector
H18(A) High Mounted Stop Light
H18(B) High Mounted Stop Light
Floor Seat Crossmember LH
Rear Pillar LH
BL
BO

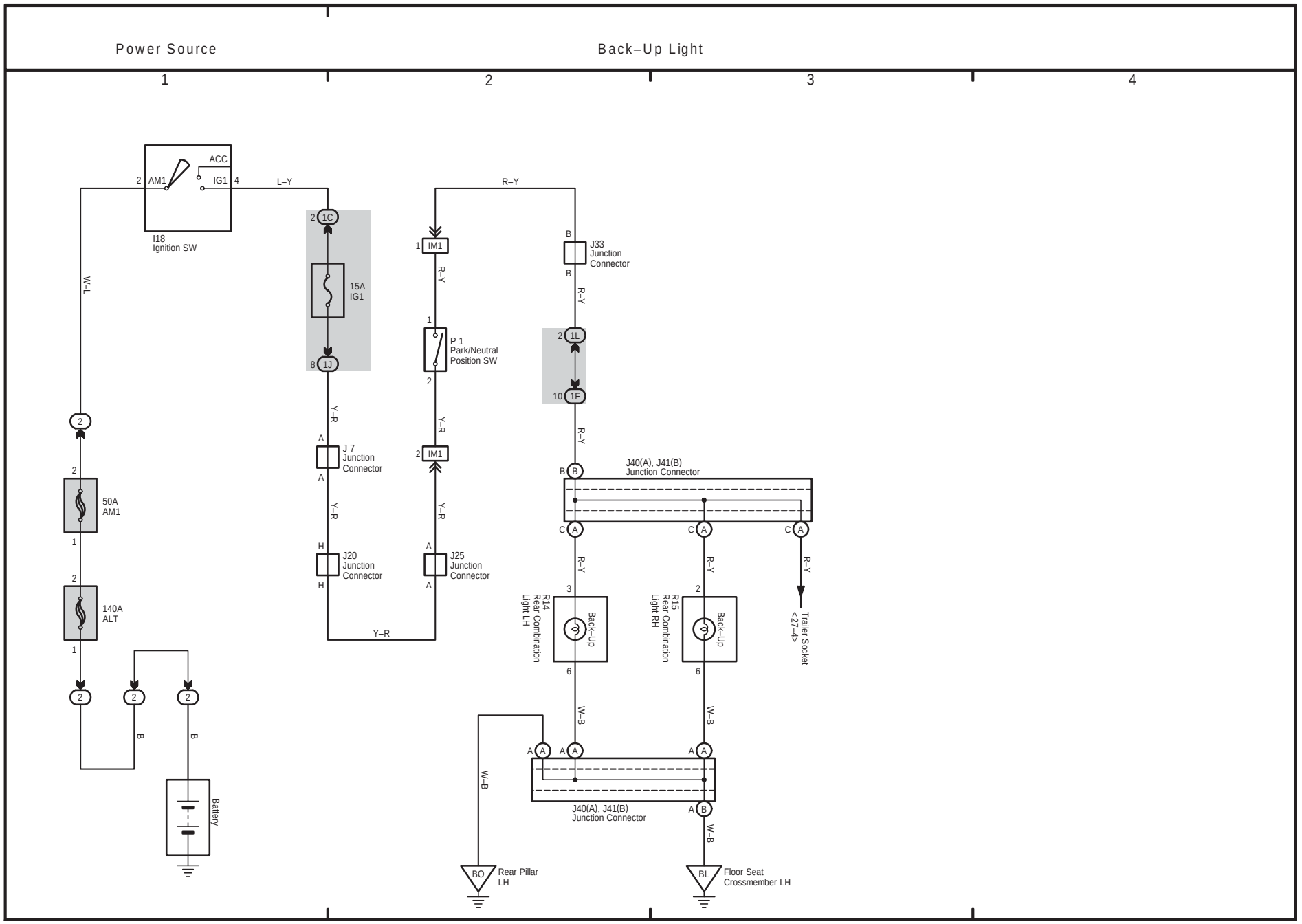
Power Source
Back–Up Light
1
2
3
4
ACC
AM1
IG1
I18
Ignition SW
L–Y
W–L
15A
IG1
1C
1J
Y–R
J 7
Junction
Connector
J20
Junction
Connector
50A
AM1
140A
ALT
B
Battery
R–Y
IM1
P 1
Park/Neutral
Position SW
J25
Junction
Connector
J33
Junction
Connector
1L
1F
J40(A), J41(B)
Junction Connector
R14
Rear Combination
Light LH
R15
Rear Combination
Light RH
Back–Up
Trailer Socket
<27–4>
W–B
J40(A), J41(B)
Junction Connector
BO
Rear Pillar
LH
BL
Floor Seat
Crossmember LH

13 4RUNNER

(Cont. next page)

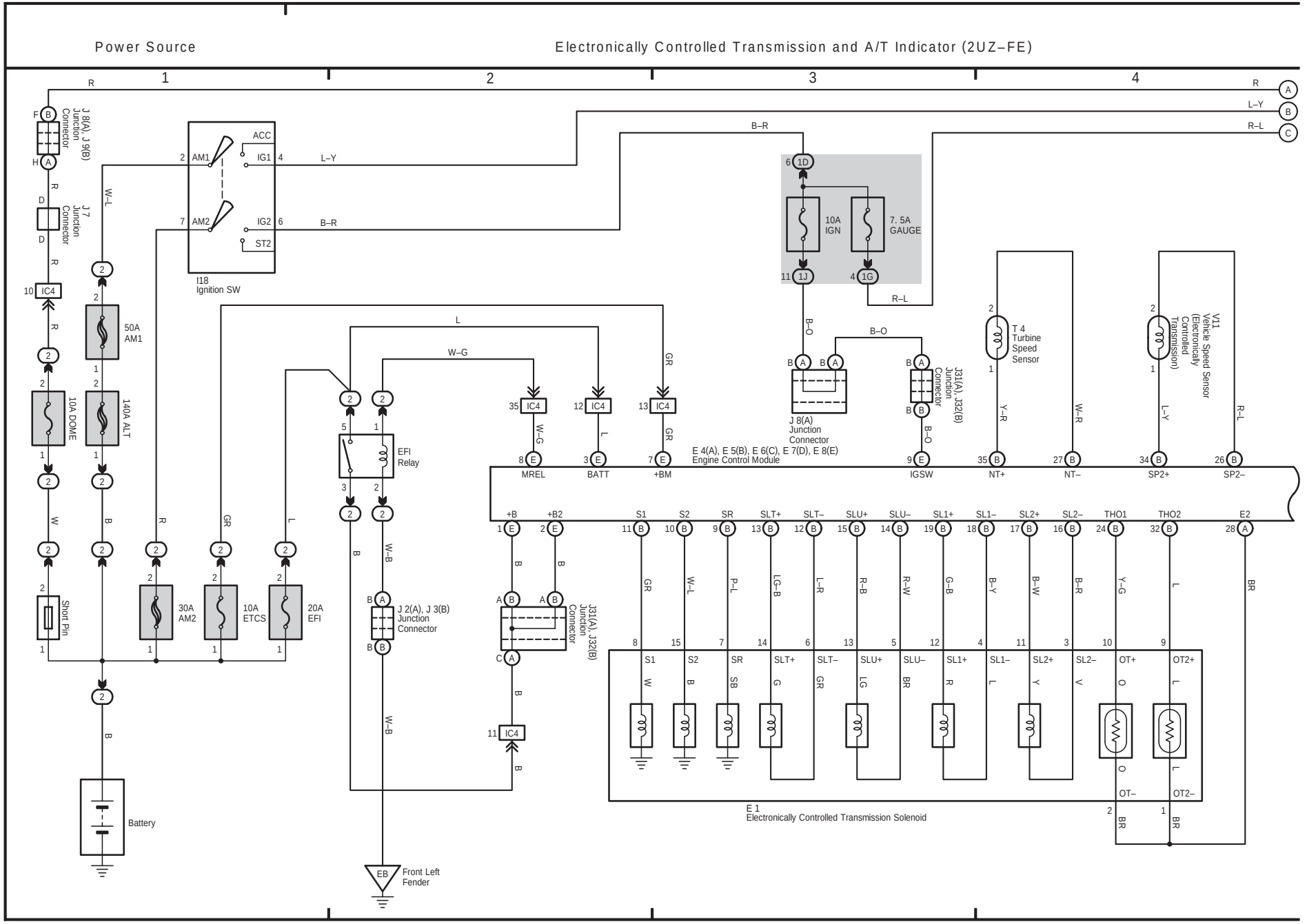

(Cont. next page)

Electronically Controlled Transmission and A/T Indicator (2UZ–FE)

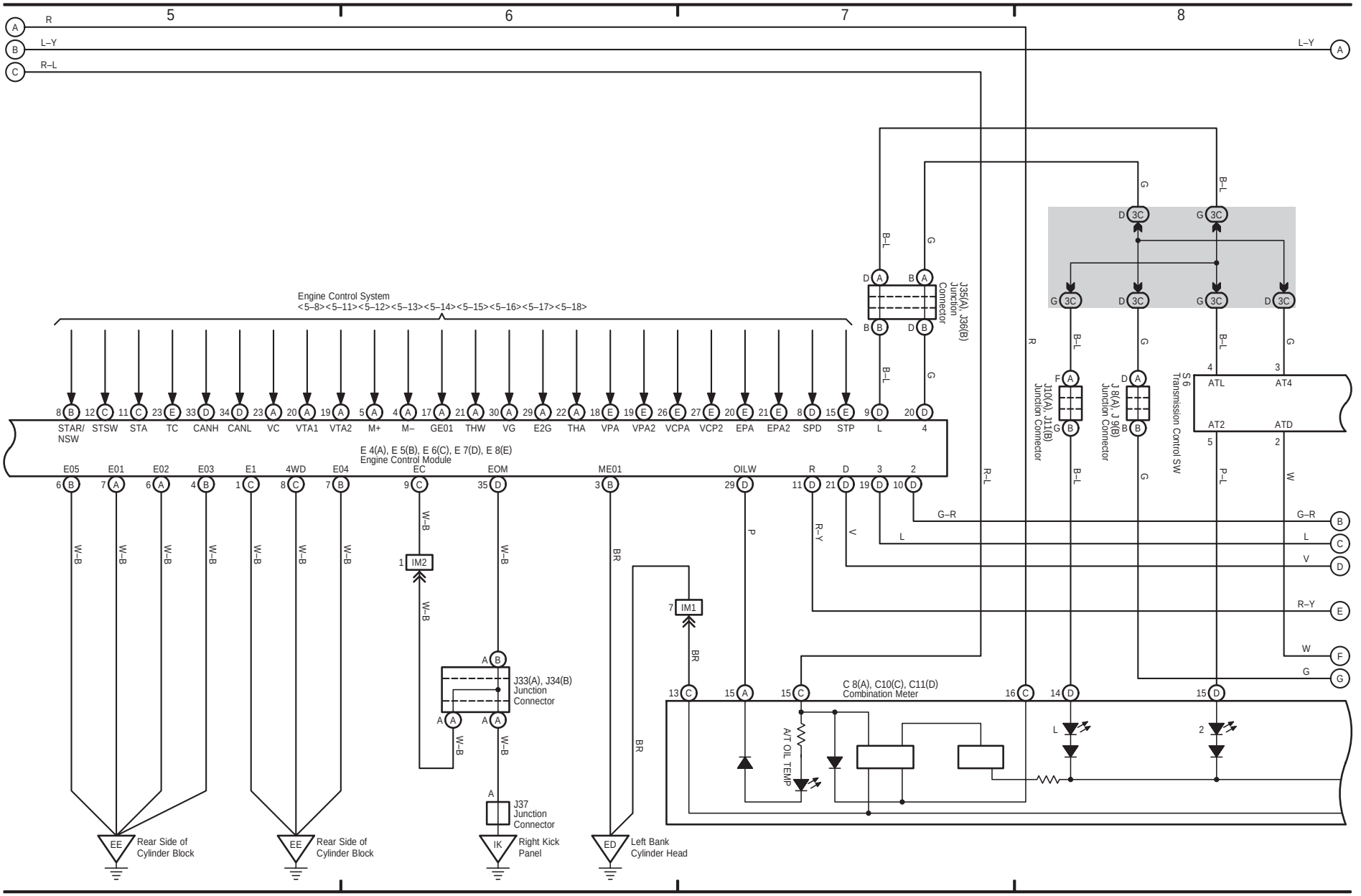

13 4RUNNER (Cont' d)

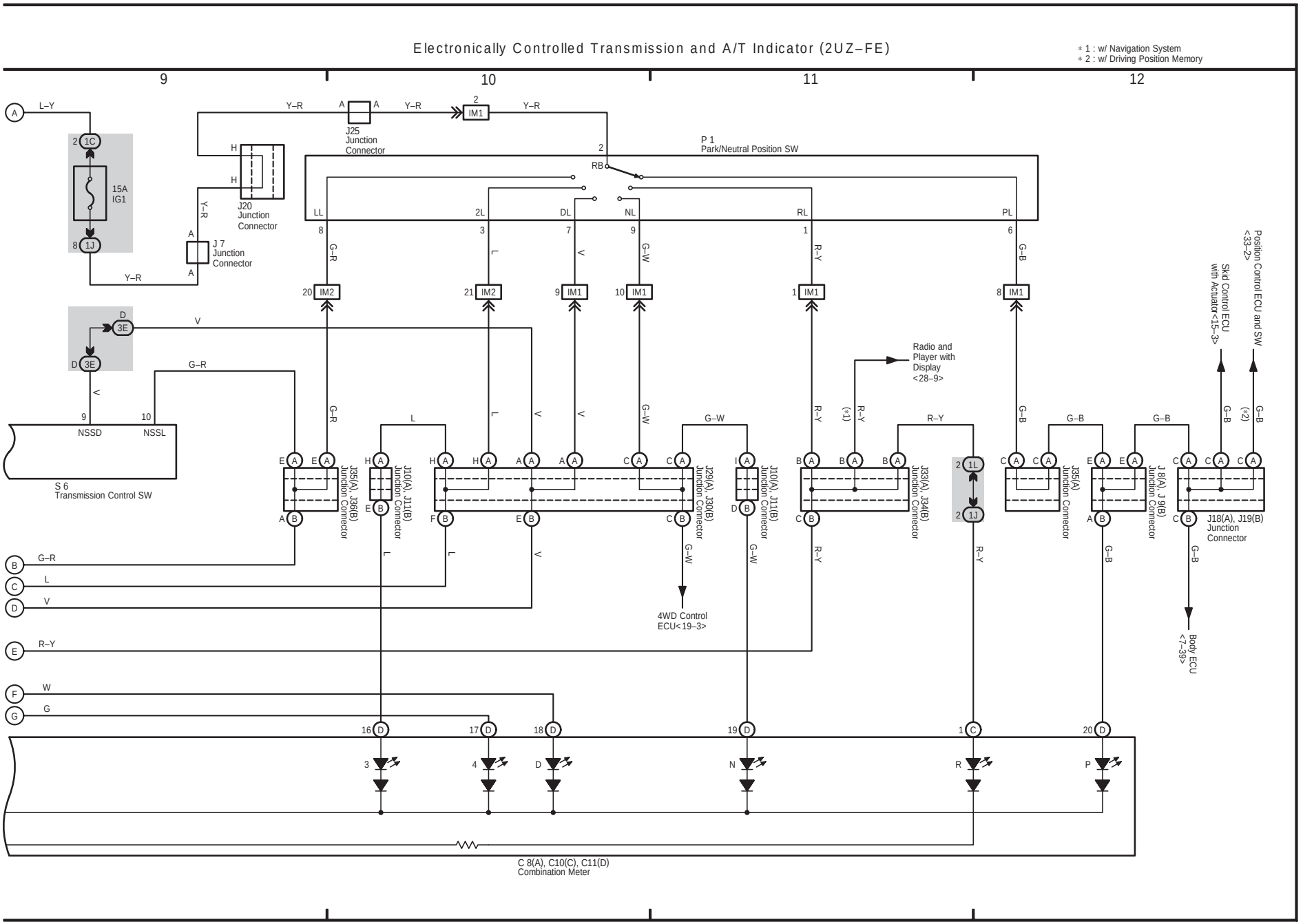

(Cont. next page)

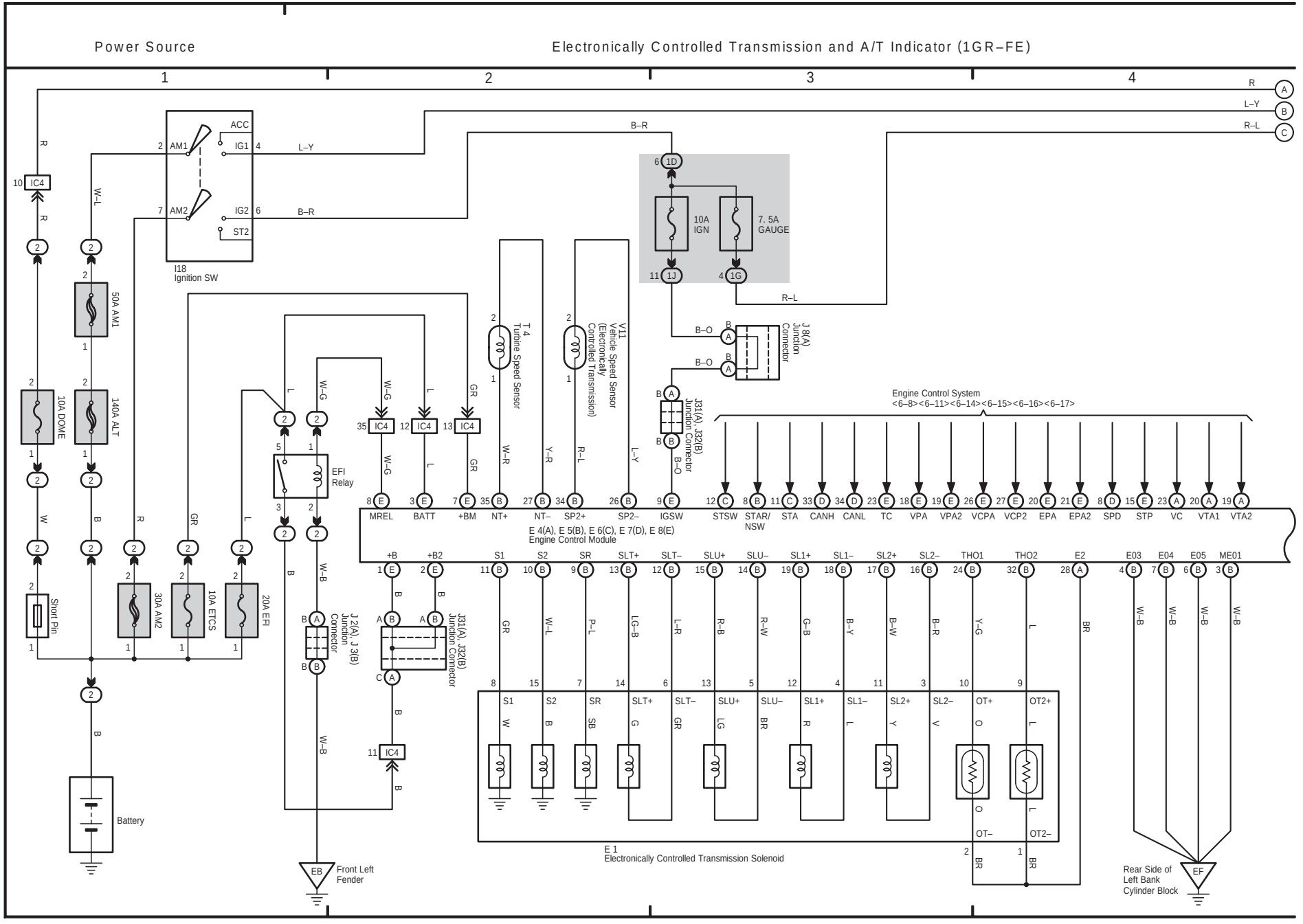

(Cont. next page)

Electronically Controlled Transmission and A/T Indicator (1GR–FE)

* 1 : w/ Navigation System

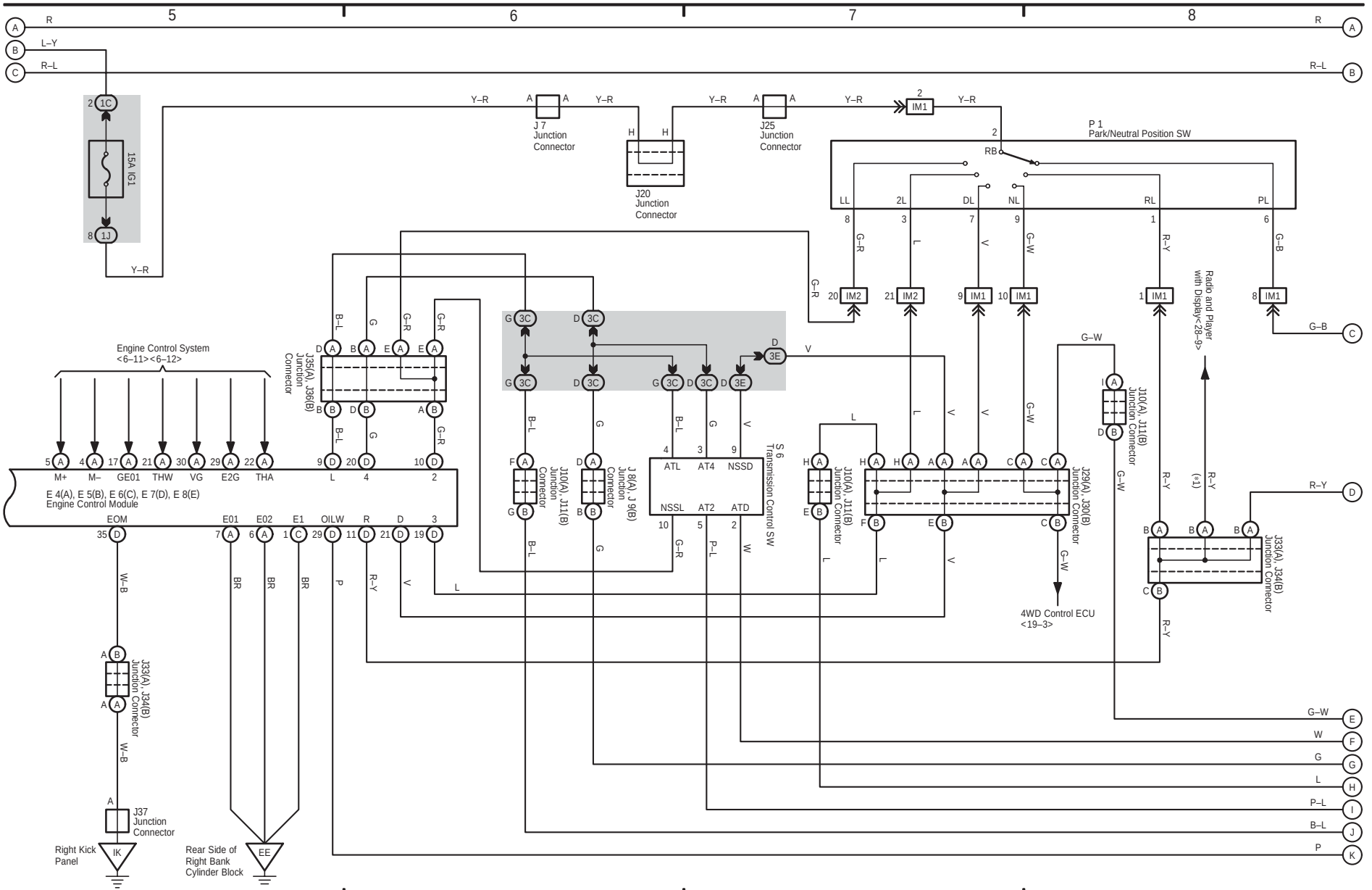

14 4RUNNER (Cont' d)

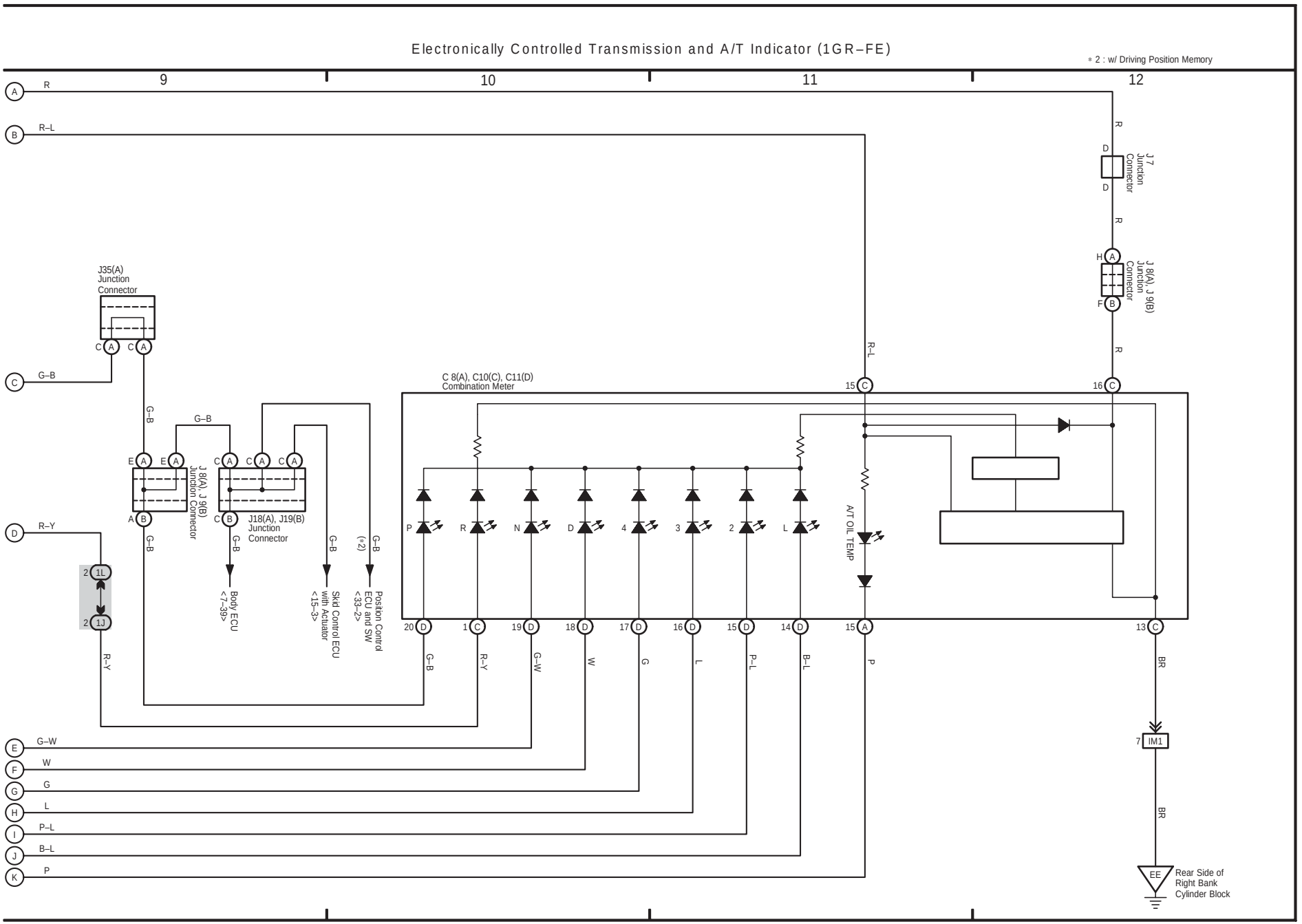

(Cont. next page)

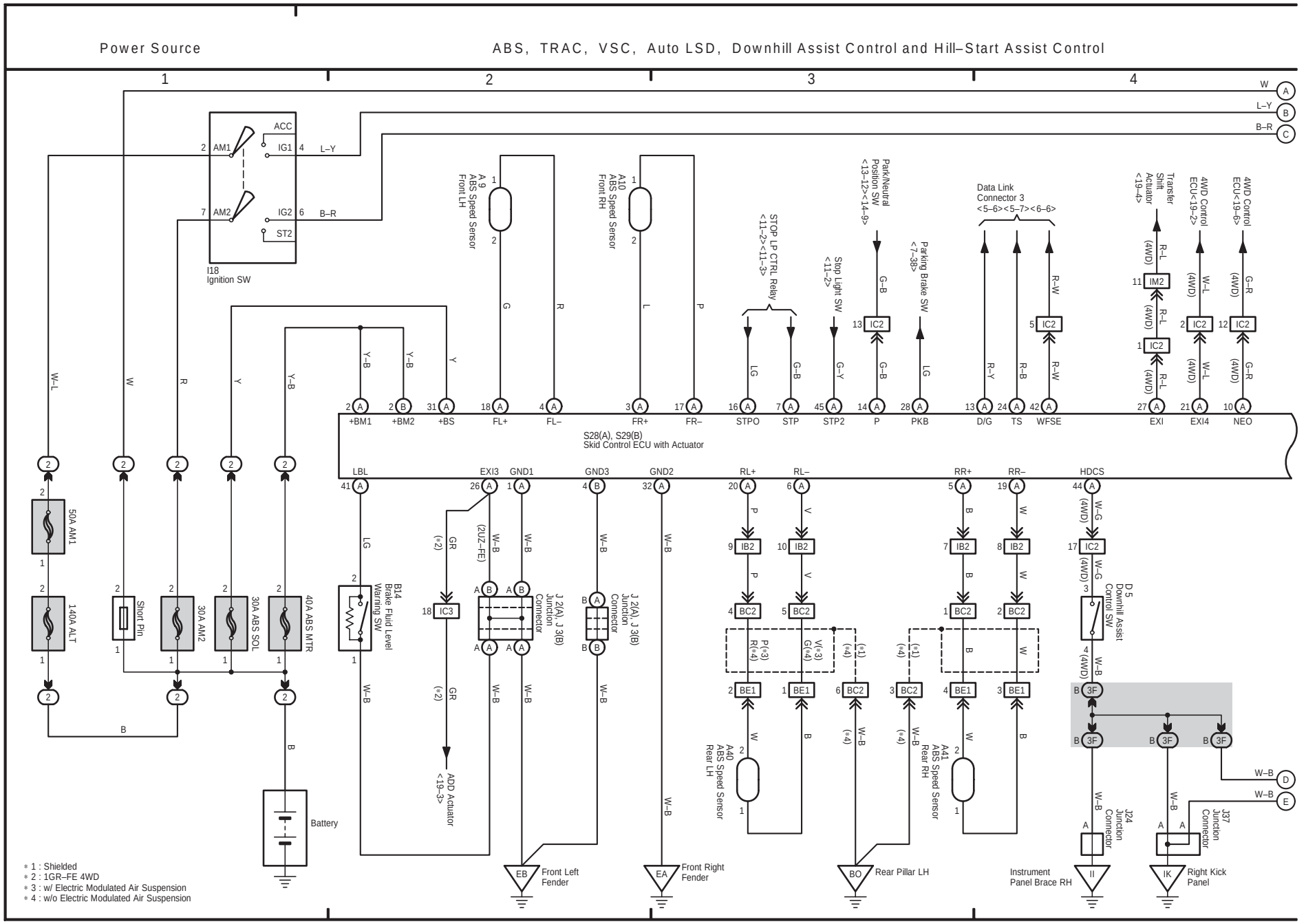

(Cont. next page)

ABS, TRAC, VSC, Auto LSD, Downhill Assist Control and Hill–Start Assist Control

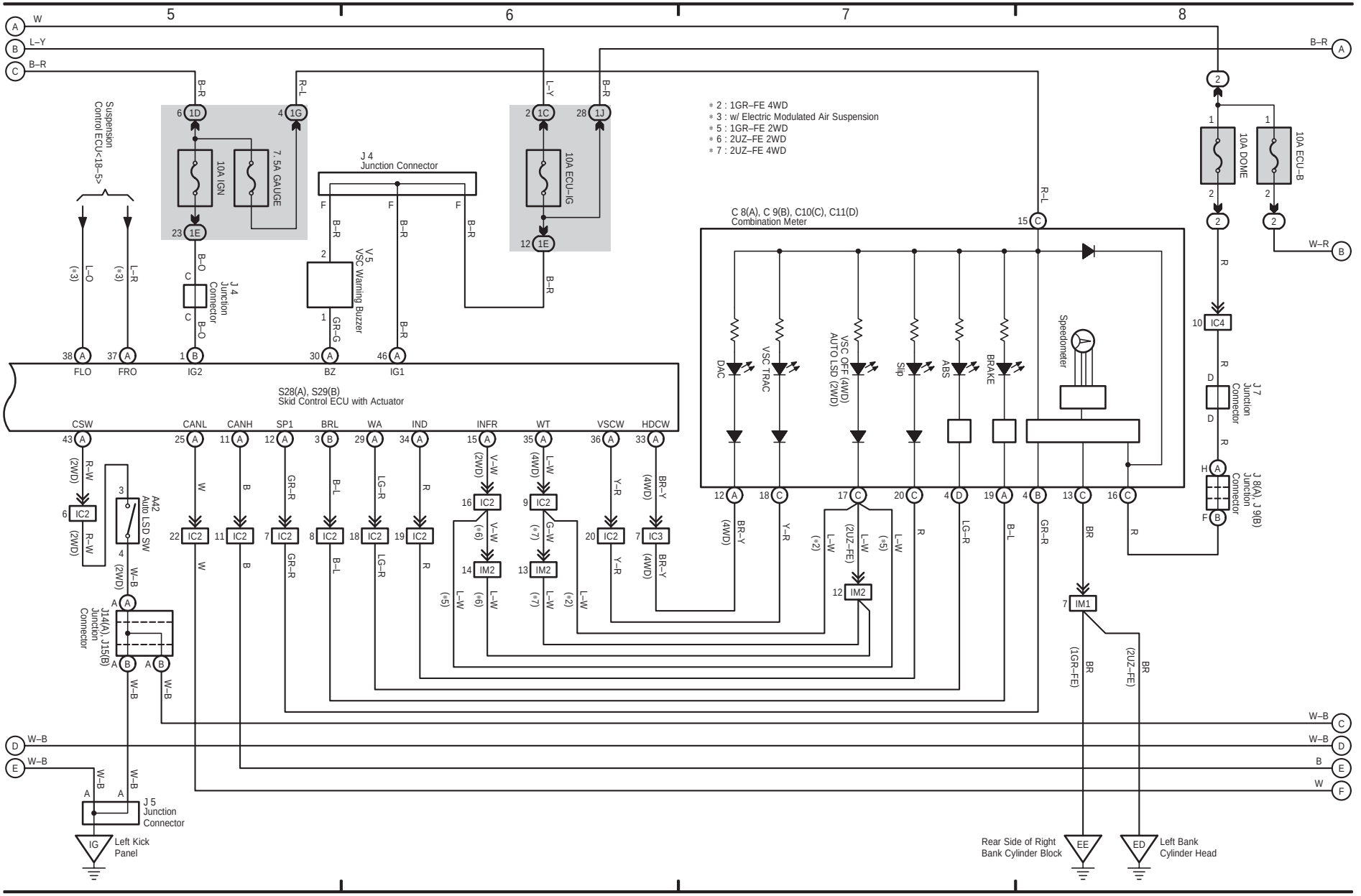

15 4RUNNER (Cont' d)

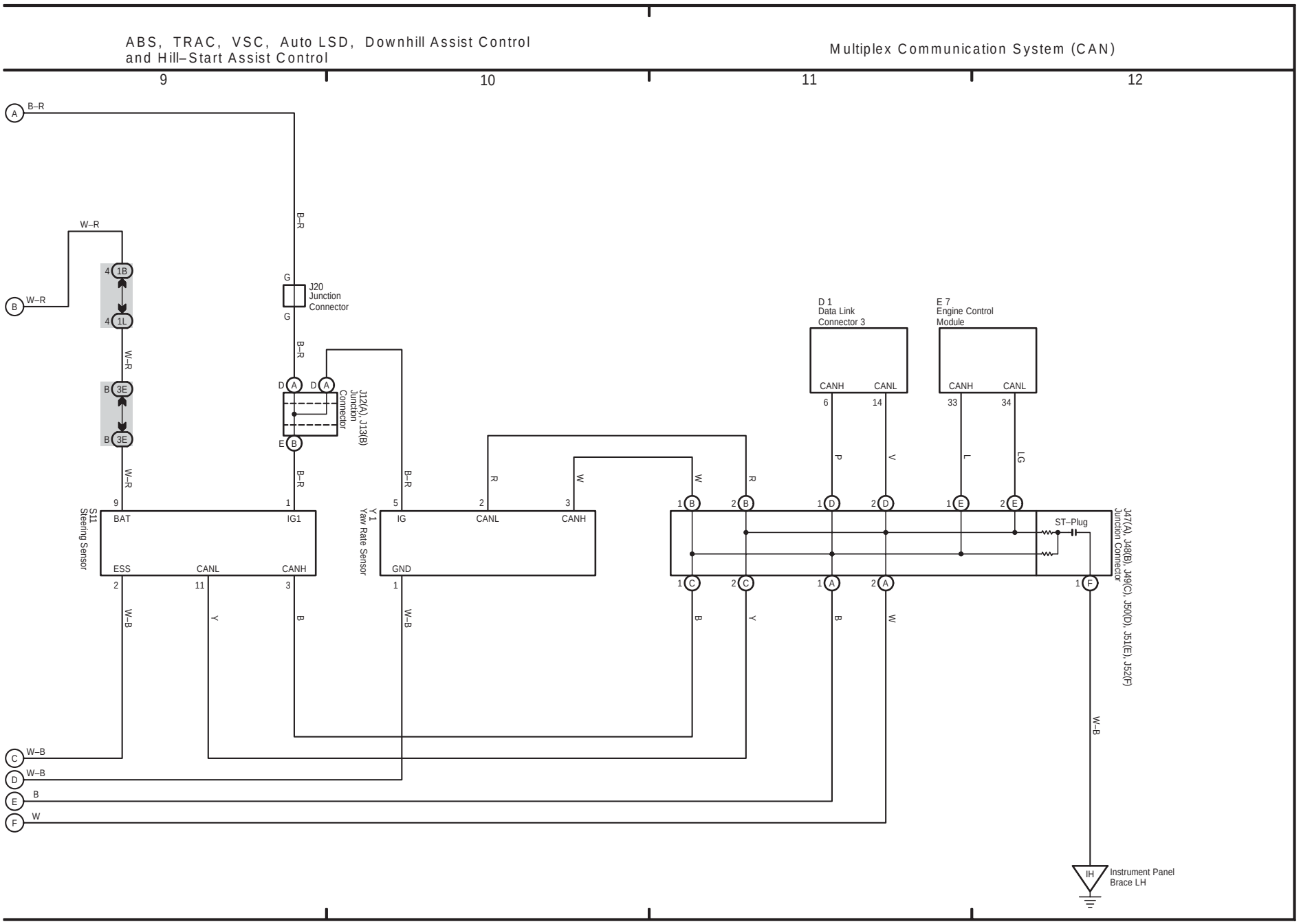

16 4RUNNER

(Cont. next page)

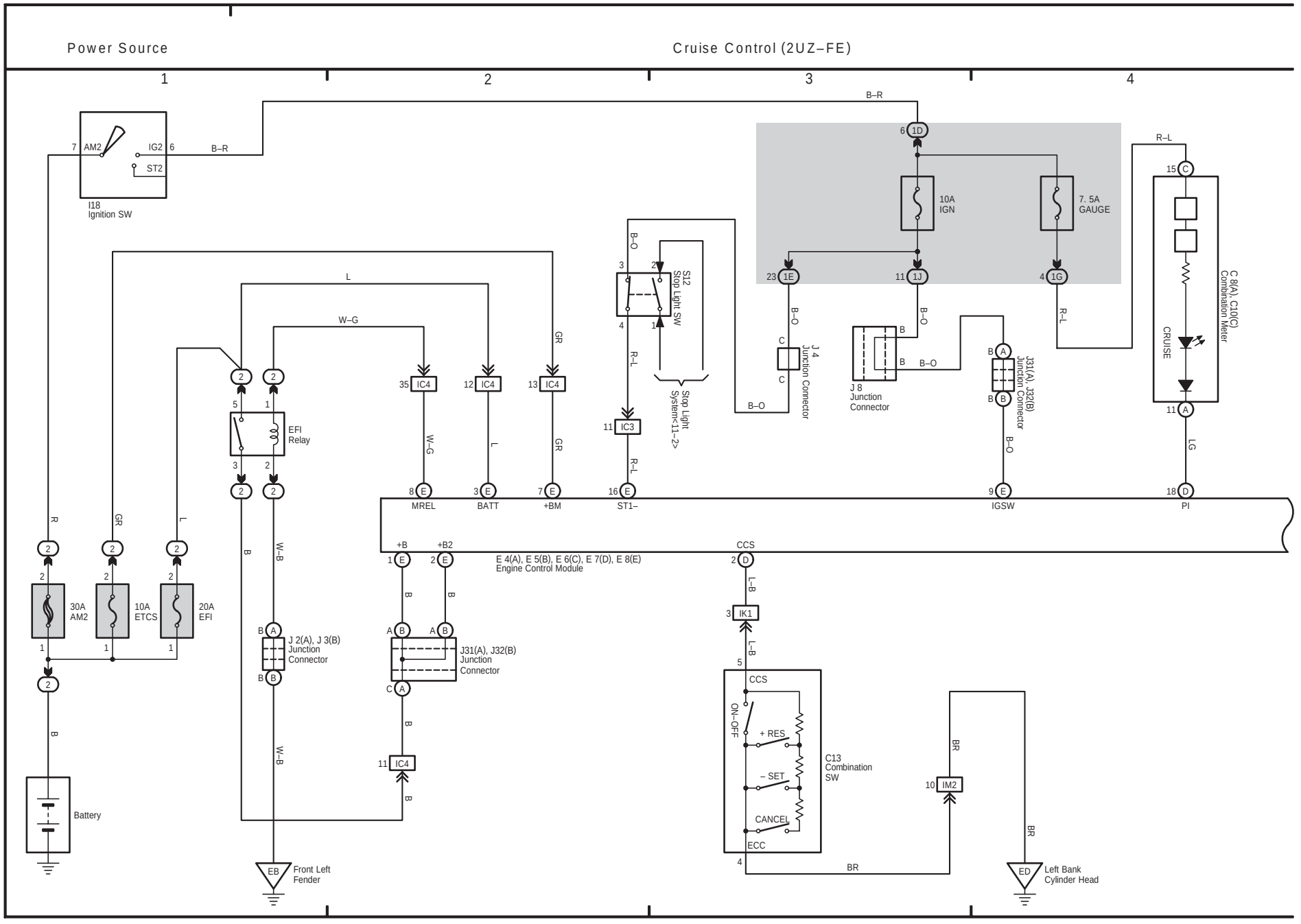

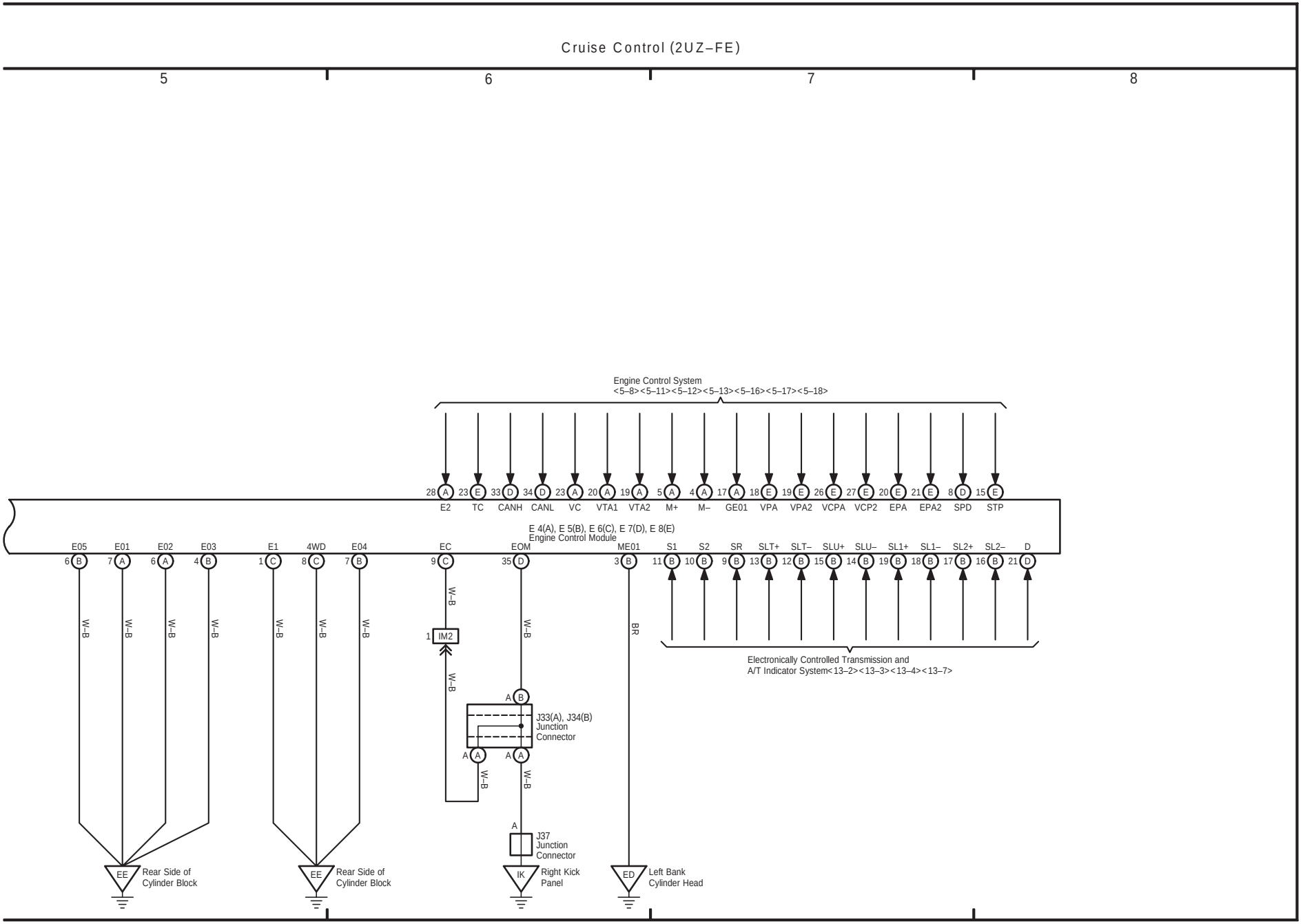
Cruise Control (2UZ–FE)
5
6
7
8
Engine Control System
<5–8><5–11><5–12><5–13><5–16><5–17><5–18>
28 A E2
23 E TC
33 D CANH
34 D CANL
23 A VC
20 A VTA1
19 A VTA2
5 A M+
4 A M–
17 A GE01
18 E VPA
19 E VPA2
26 E VCPA
27 E VCP2
20 E EPA
21 E EPA2
8 D SPD
15 E STP
E 4(A), E 5(B), E 6(C), E 7(D), E 8(E)
Engine Control Module
E05 6 B
E01 7 A
E02 6 A
E03 4 B
E1 1 C
4WD 8 C
E04 7 B
EC 9 C
EOM 35 D
ME01 3 B
S1 11 B
S2 10 B
SR 9 B
SLT+ 13 B
SLT– 12 B
SLU+ 15 B
SLU– 14 B
SL1+ 19 B
SL1– 18 B
SL2+ 17 B
SL2– 16 B
D 21 D
W–B
BR
1 IM2
A B
J33(A), J34(B)
Junction
Connector
A A
A A
A
J37
Junction
Connector
Electronically Controlled Transmission and
A/T Indicator System<13–2><13–3><13–4><13–7>
EE Rear Side of Cylinder Block
EE Rear Side of Cylinder Block
IK Right Kick Panel
ED Left Bank Cylinder Head

(Cont. next page)

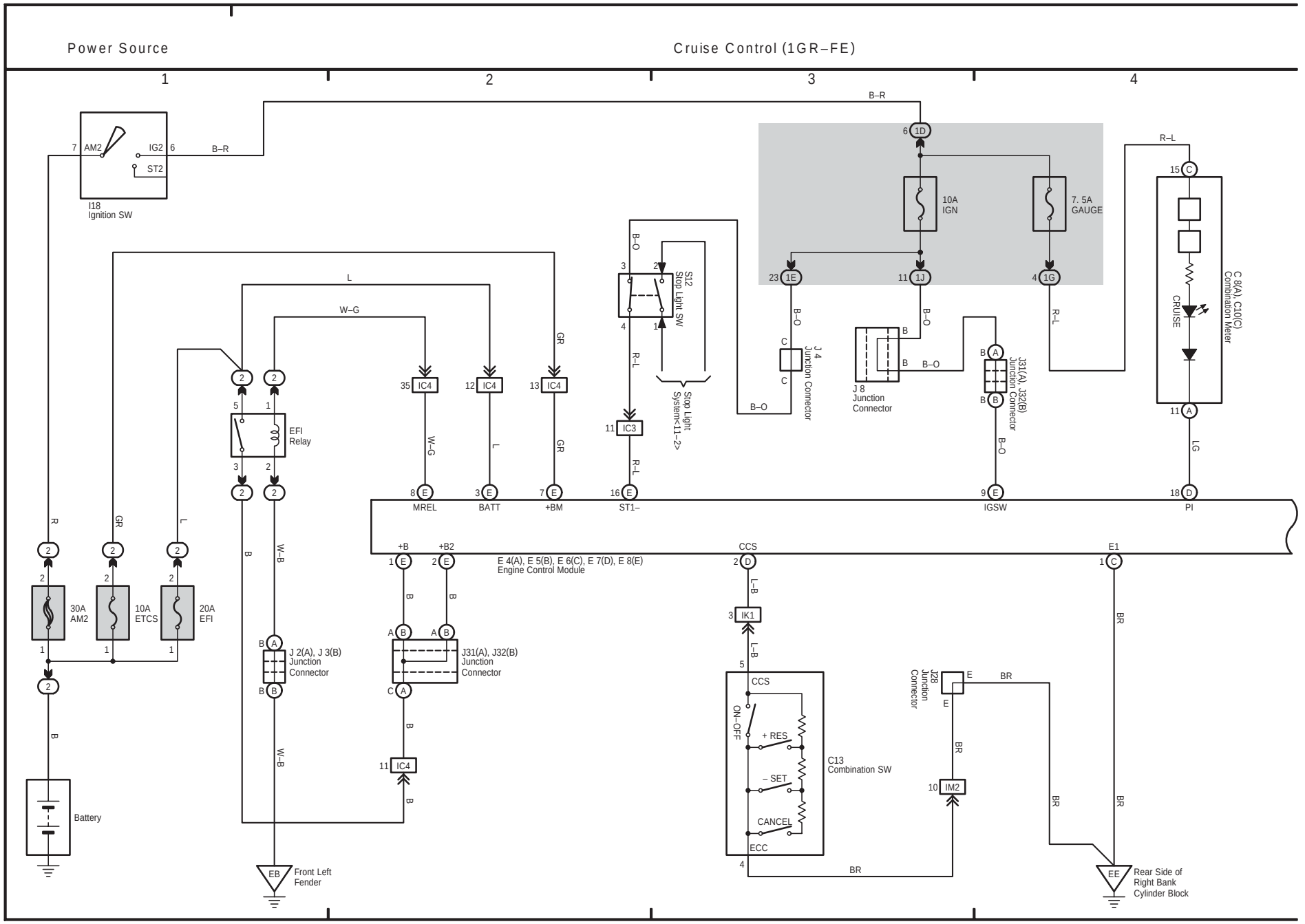

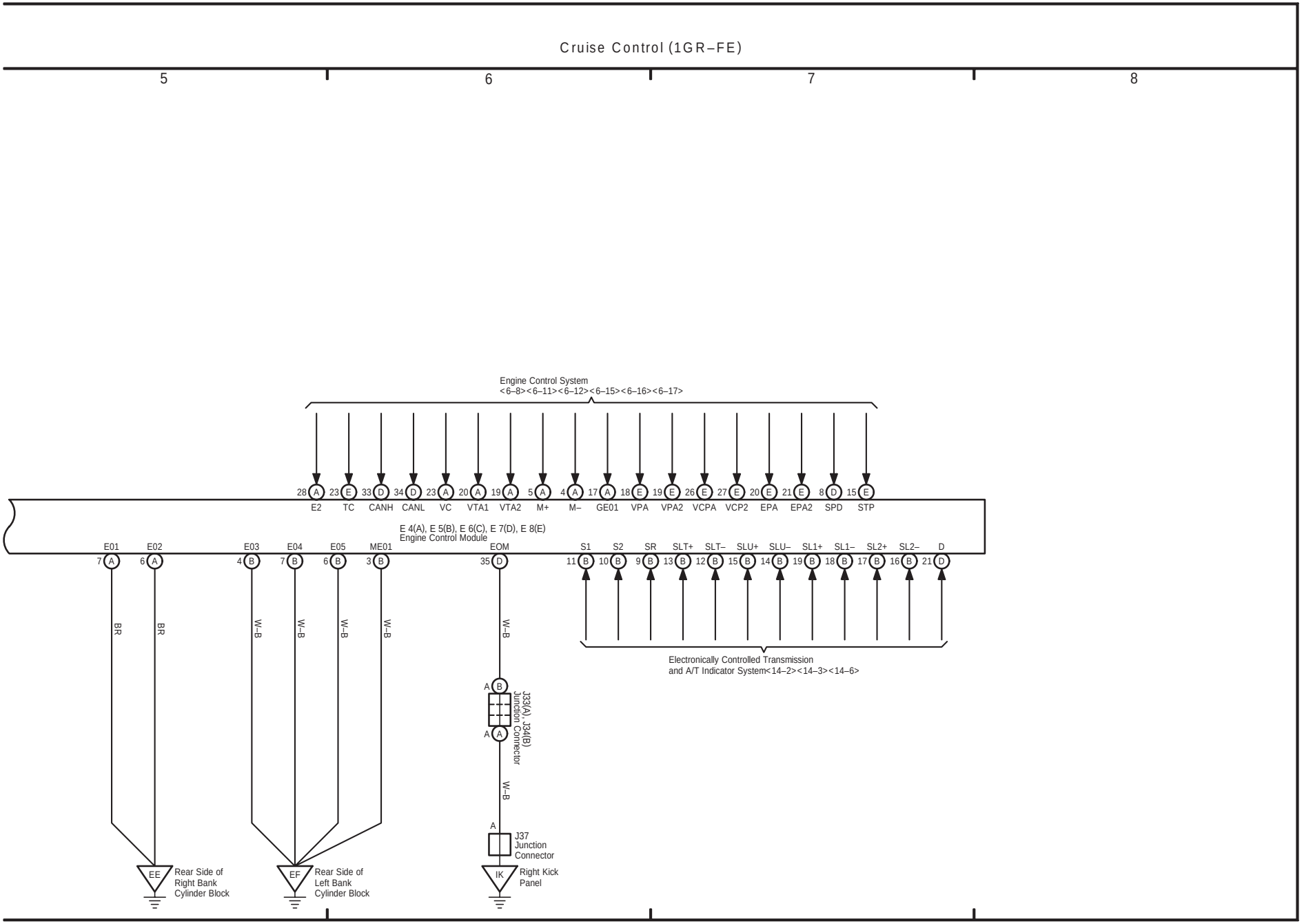
Cruise Control (1GR–FE)
5
6
7
8
Engine Control System
<6–8><6–11><6–12><6–15><6–16><6–17>
28 A E2
23 E TC
33 D CANH
34 D CANL
23 A VC
20 A VTA1
19 A VTA2
5 A M+
4 A M–
17 A GE01
18 E VPA
19 E VPA2
26 E VCPA
27 E VCP2
20 E EPA
21 E EPA2
8 D SPD
15 E STP
E 4(A), E 5(B), E 6(C), E 7(D), E 8(E)
Engine Control Module
E01 7 A
E02 6 A
E03 4 B
E04 7 B
E05 6 B
ME01 3 B
EOM 35 D
S1 11 B
S2 10 B
SR 9 B
SLT+ 13 B
SLT– 12 B
SLU+ 15 B
SLU– 14 B
SL1+ 19 B
SL1– 18 B
SL2+ 17 B
SL2– 16 B
D 21 D
BR
BR
W–B
W–B
W–B
W–B
W–B
W–B
Electronically Controlled Transmission
and A/T Indicator System<14–2><14–3><14–6>
A B
A A
J33(A), J34(B)
Junction Connector
A
J37
Junction
Connector
EE
Rear Side of
Right Bank
Cylinder Block
EF
Rear Side of
Left Bank
Cylinder Block
IK
Right Kick
Panel

18 4RUNNER

(Cont. next page)

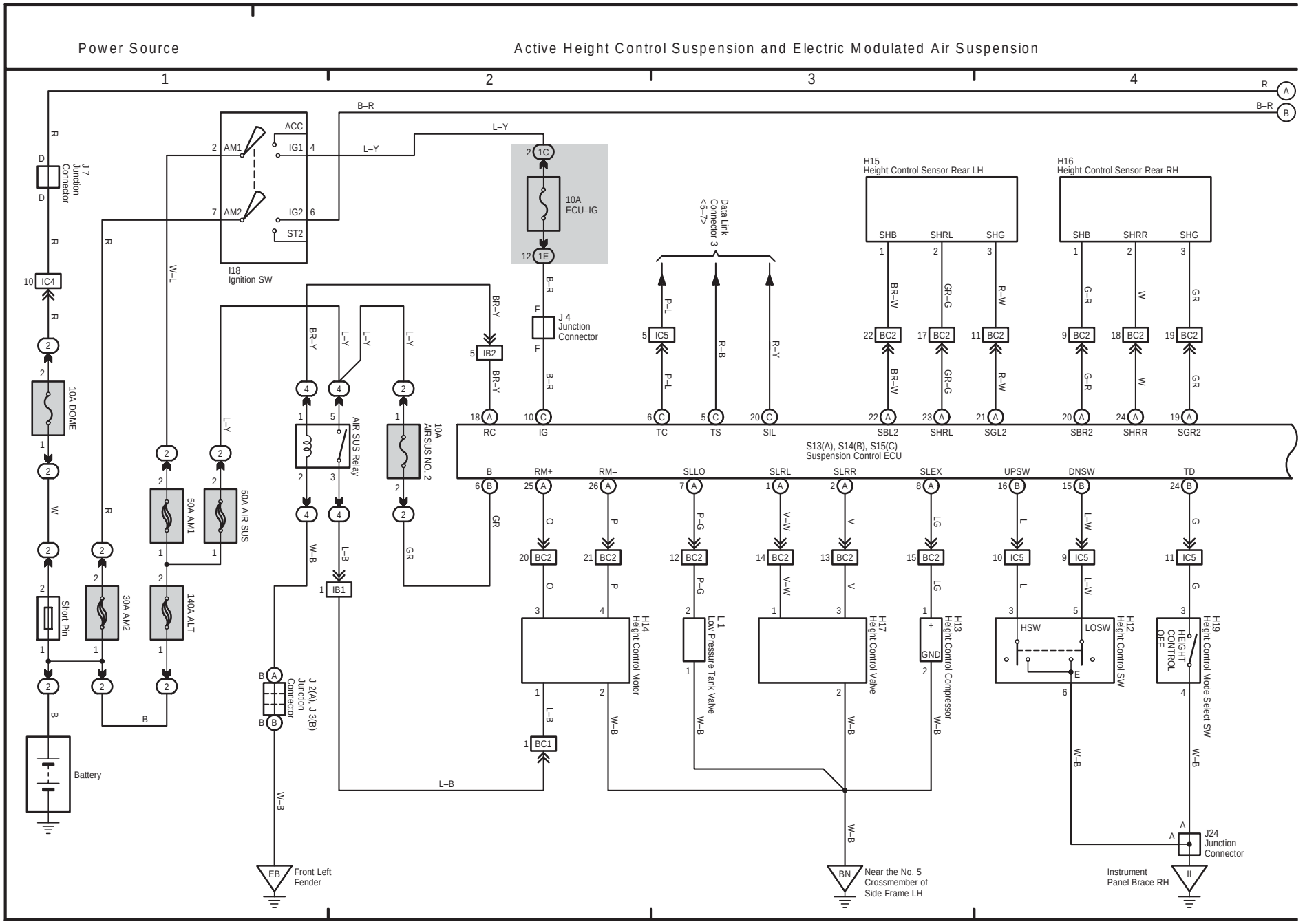

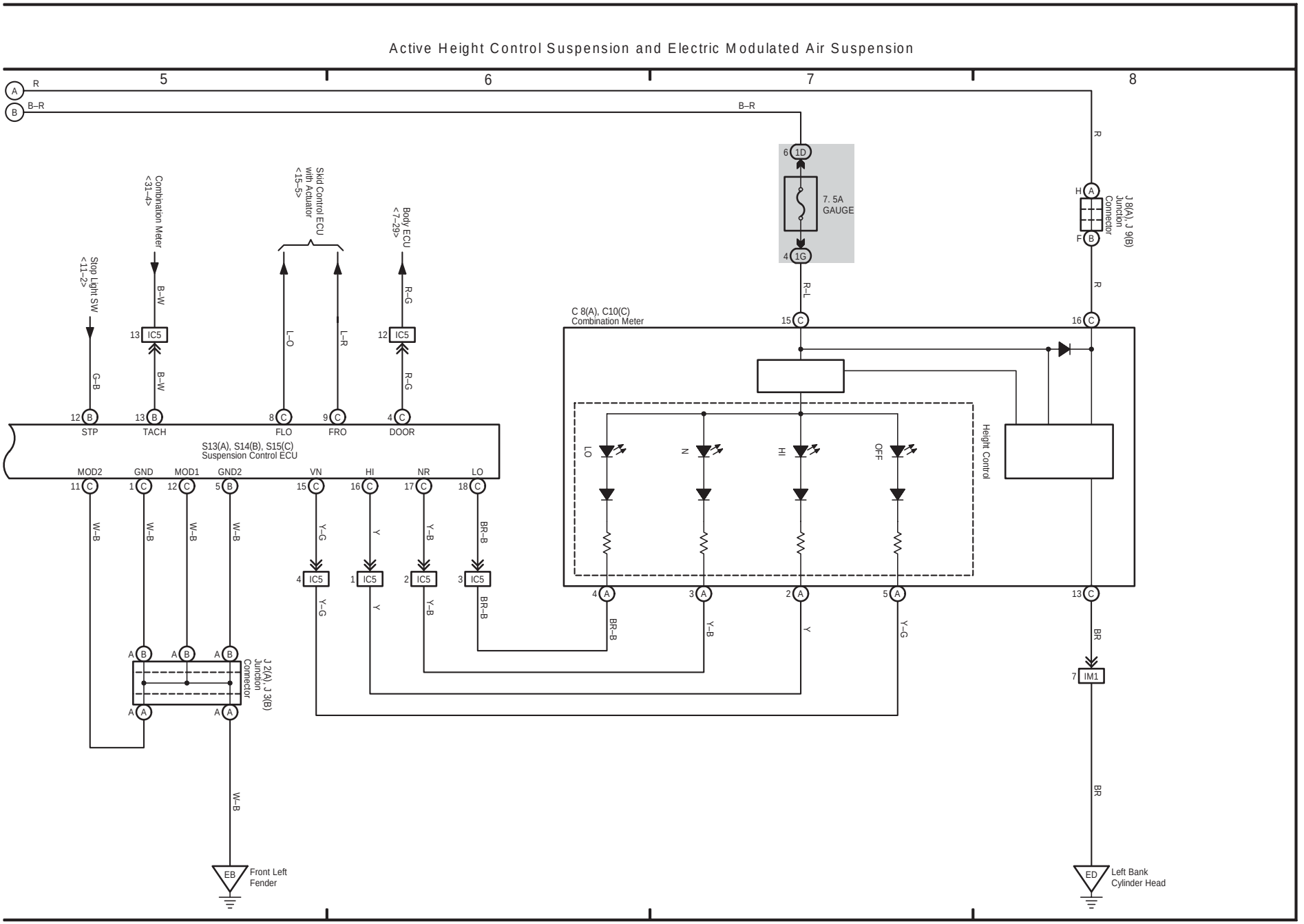
Active Height Control Suspension and Electric Modulated Air Suspension
5
6
7
8
R
B–R
B–R
6 1D
7. 5A GAUGE
4 1G
R–L
R
H A
F B
J 8(A), J 9(B) Junction Connector
C 8(A), C10(C) Combination Meter
15 C
16 C
Combination Meter <31–4>
Skid Control ECU with Actuator <15–5>
Body ECU <7–29>
Stop Light SW <11–2>
B–W
L–O
L–R
R–G
G–B
13 IC5
12 IC5
12 B
13 B
8 C
9 C
4 C
STP
TACH
FLO
FRO
DOOR
S13(A), S14(B), S15(C) Suspension Control ECU
MOD2
GND
MOD1
GND2
VN
HI
NR
LO
11 C
1 C
12 C
5 B
15 C
16 C
17 C
18 C
W–B
Y–G
Y
Y–B
BR–B
4 IC5
1 IC5
2 IC5
3 IC5
LO
N
HI
OFF
Height Control
4 A
3 A
2 A
5 A
13 C
BR
7 IM1
A B
A A
J 2(A), J 3(B) Junction Connector
EB
Front Left Fender
ED
Left Bank Cylinder Head

19 4RUNNER

(Cont. next page)

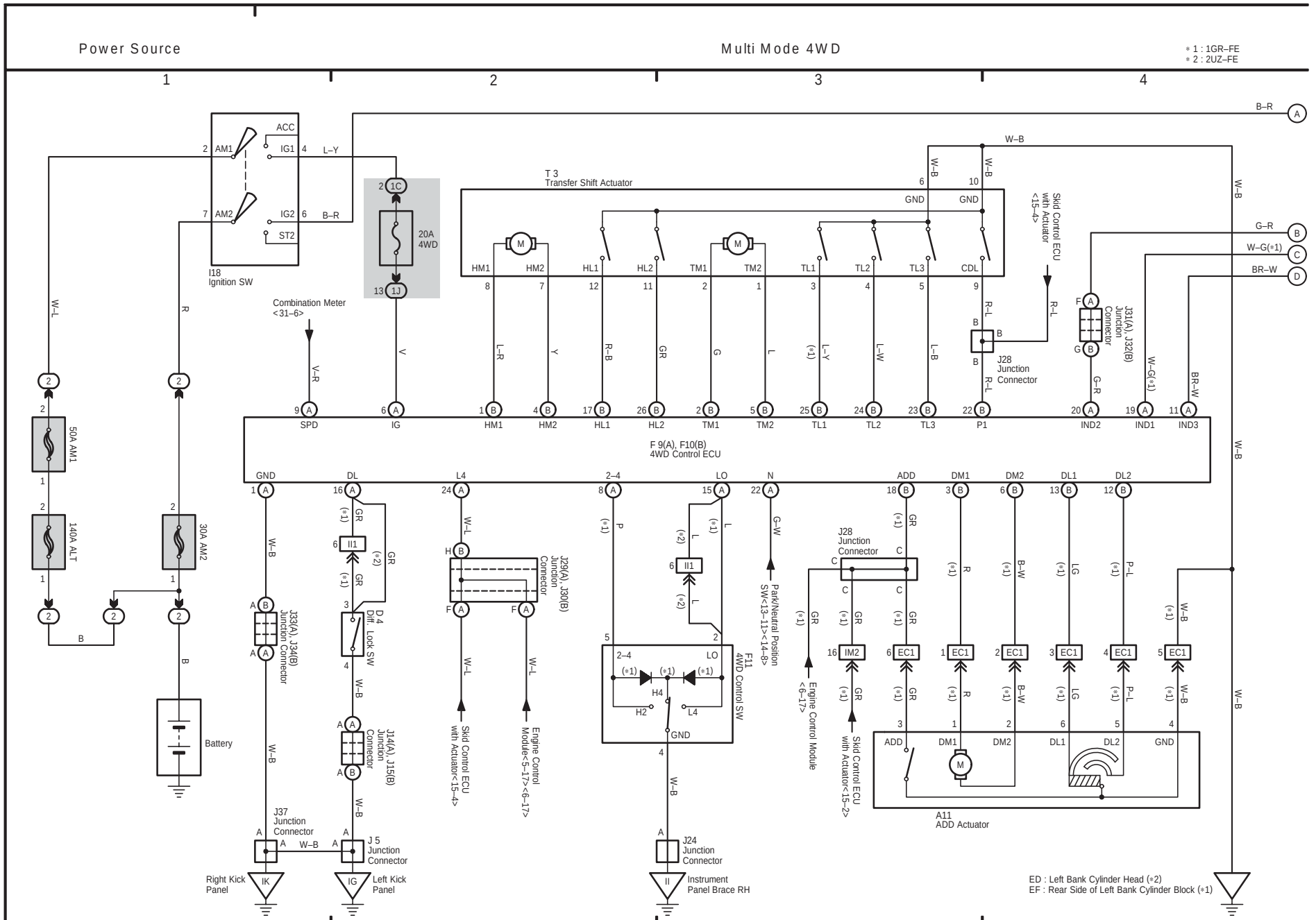

Multi Mode 4WD

* 1 : 1GR–FE

5 6 7 8

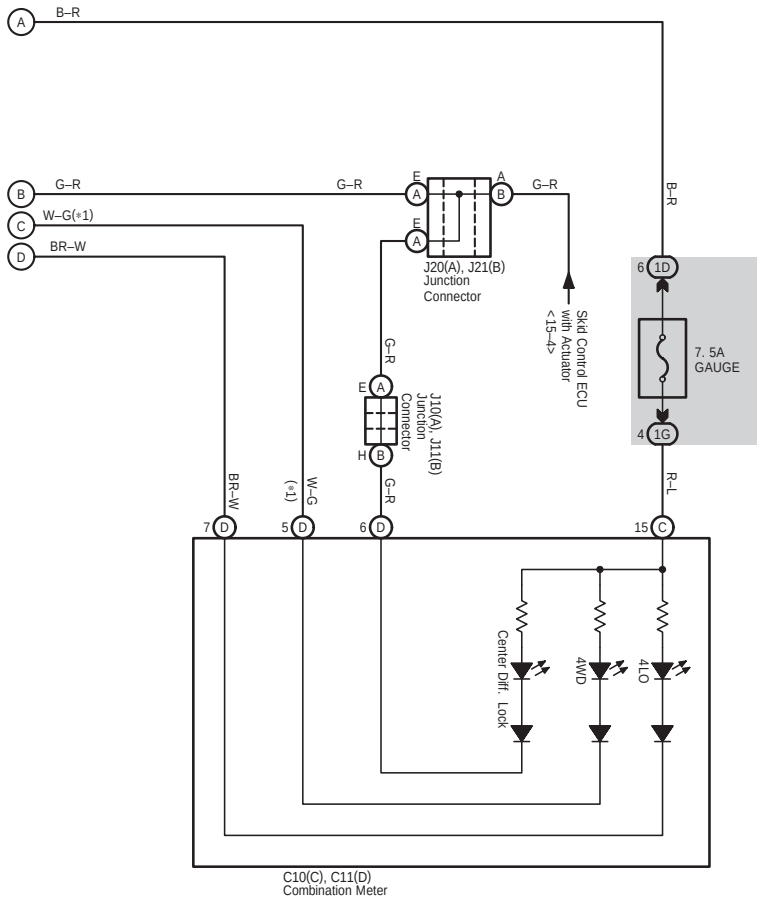

(Cont. next page)

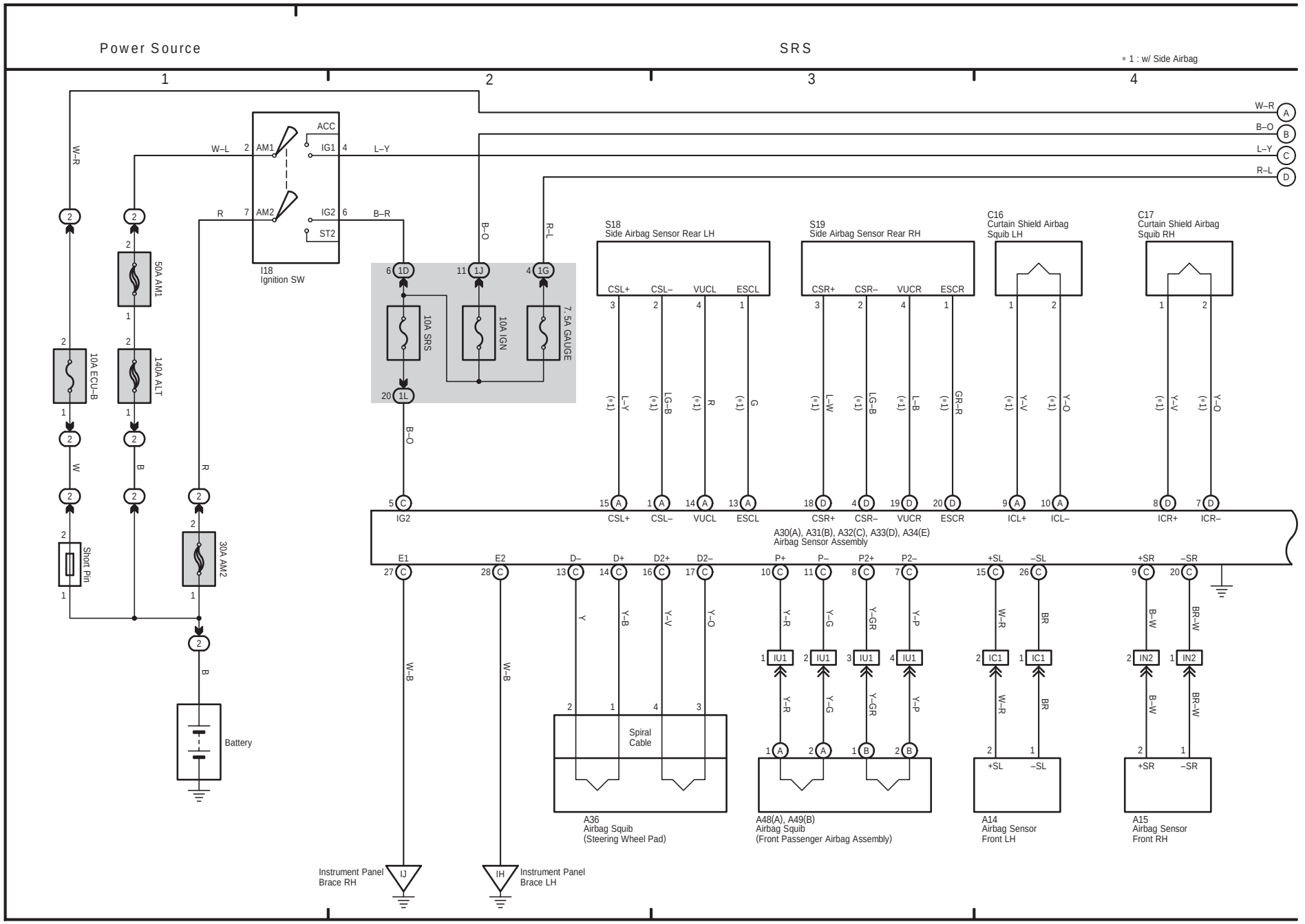

(Cont. next page)

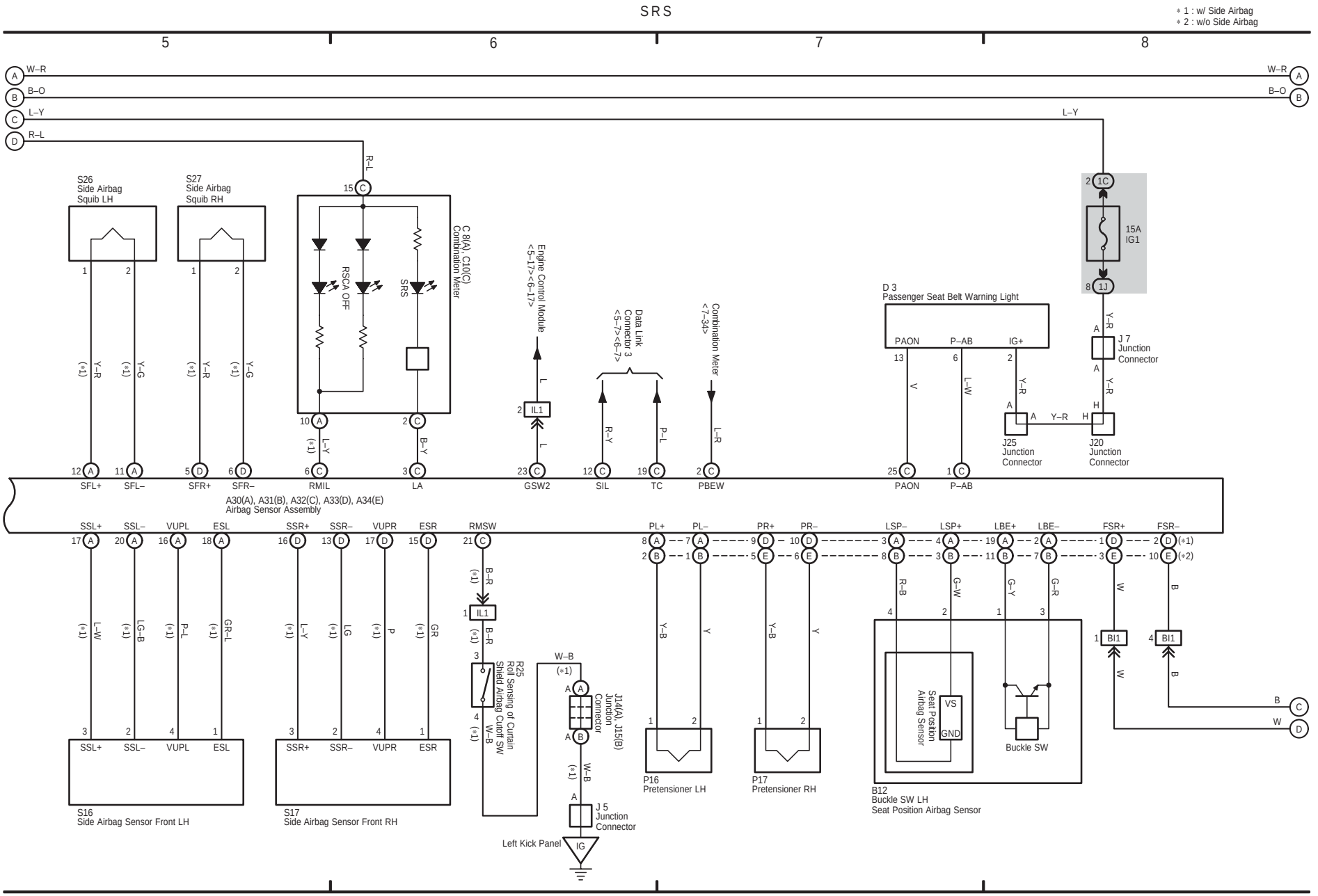

20 4RUNNER (Cont' d)

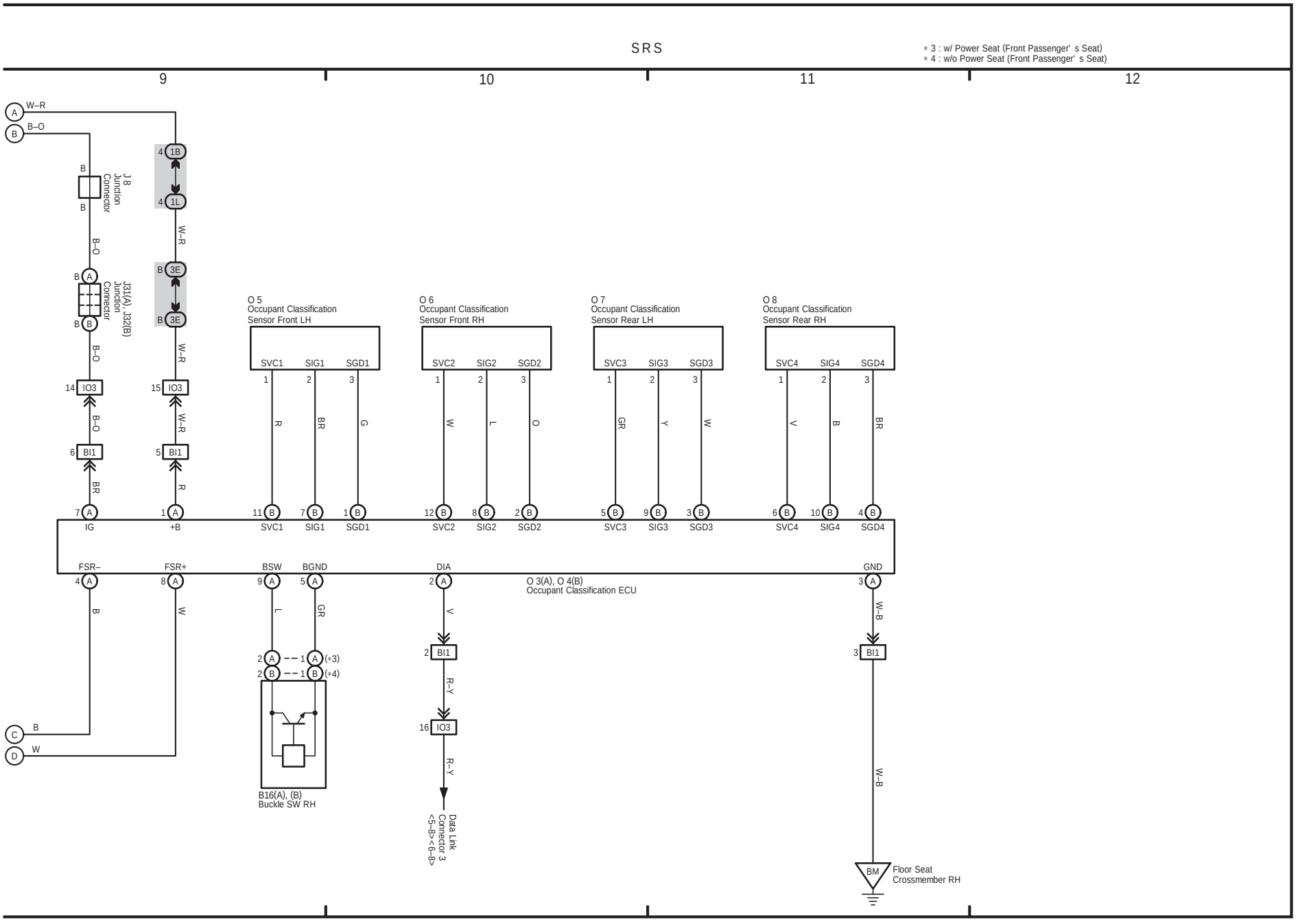

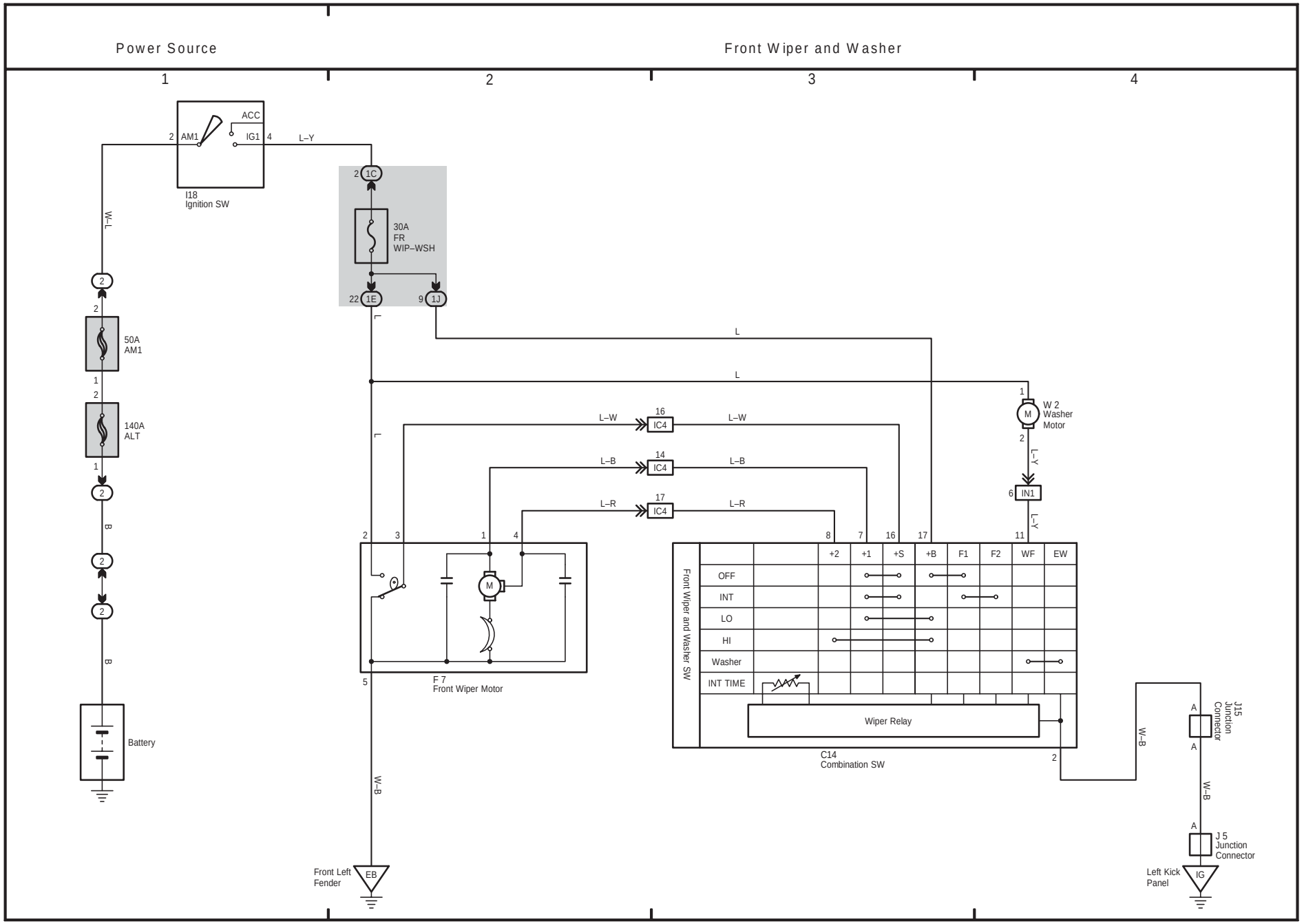
Power Source
Front Wiper and Washer
1
2
3
4
ACC
2 AM1
IG1 4
L–Y
I18
Ignition SW
2 1C
30A
FR
WIP–WSH
22 1E
9 1J
W–L
50A
AM1
140A
ALT
B
Battery
L
L–W
16
IC4
L–B
14
L–R
17
W 2
Washer
Motor
L–Y
6 IN1
F 7
Front Wiper Motor
Front Wiper and Washer SW
+2
+1
+S
+B
F1
F2
WF
EW
OFF
INT
LO
HI
Washer
INT TIME
Wiper Relay
C14
Combination SW
W–B
J15
Junction
Connector
J 5
Junction
Connector
Front Left
Fender
EB
Left Kick
Panel
IG

22 4RUNNER

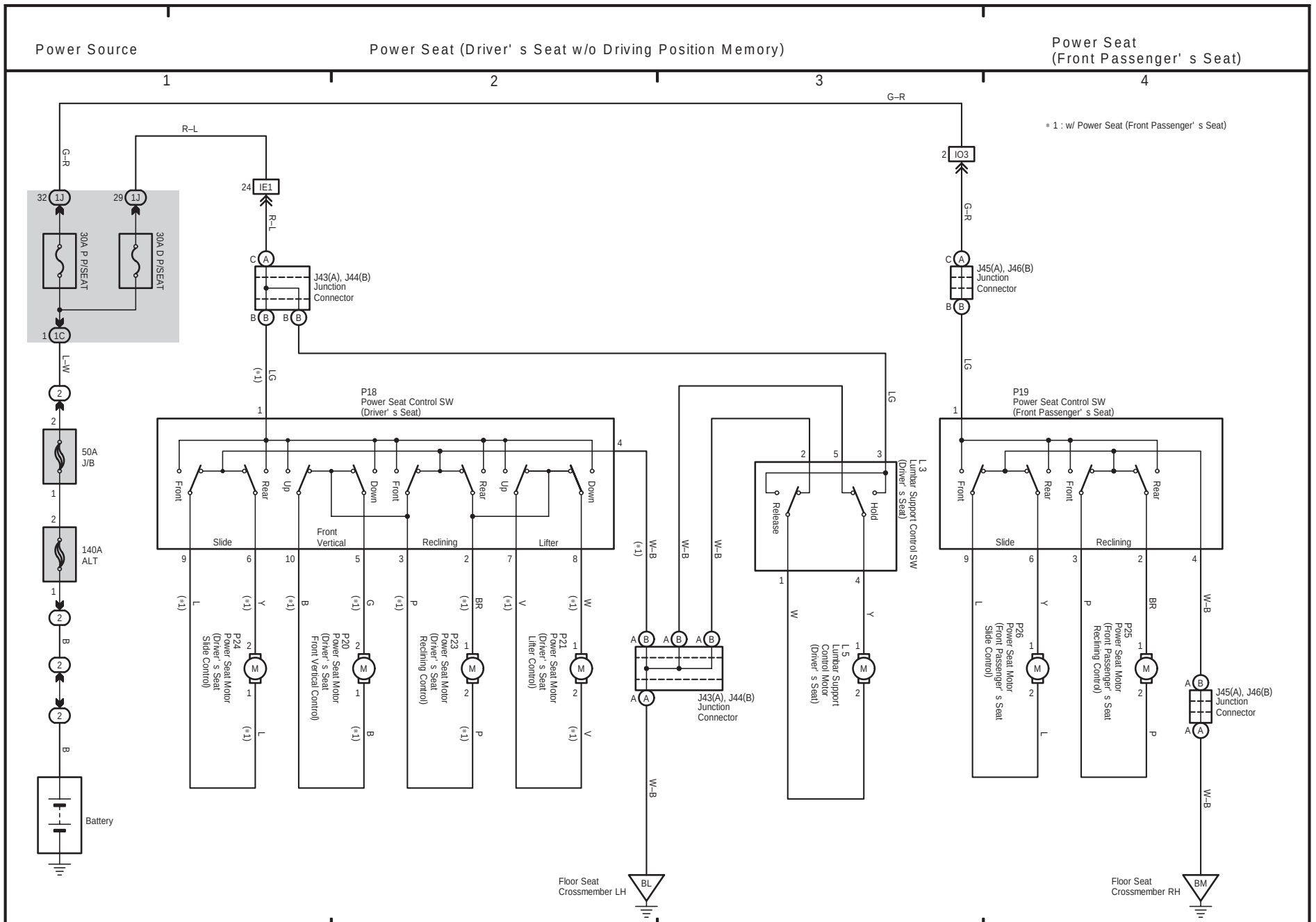
Power Source
Power Seat (Driver' s Seat w/o Driving Position Memory)
Power Seat (Front Passenger' s Seat)
1
2
3
4
* 1 : w/ Power Seat (Front Passenger' s Seat)
G–R
R–L
L–W
LG
W–B
B
32 1J
29 1J
30A P/SEAT
30A D/SEAT
1C
50A J/B
140A ALT
Battery
24 IE1
J43(A), J44(B) Junction Connector
2 IO3
J45(A), J46(B) Junction Connector
P18 Power Seat Control SW (Driver' s Seat)
P19 Power Seat Control SW (Front Passenger' s Seat)
Front
Rear
Up
Down
Slide
Front Vertical
Reclining
Lifter
L3 Lumbar Support Control SW (Driver' s Seat)
Release
Hold
L5 Lumbar Support Control Motor (Driver' s Seat)
P24 Power Seat Motor (Driver' s Seat Slide Control)
P20 Power Seat Motor (Driver' s Seat Front Vertical Control)
P23 Power Seat Motor (Driver' s Seat Reclining Control)
P21 Power Seat Motor (Driver' s Seat Lifter Control)
P26 Power Seat Motor (Front Passenger' s Seat Slide Control)
P25 Power Seat Motor (Front Passenger' s Seat Reclining Control)
Floor Seat Crossmember LH
Floor Seat Crossmember RH
BL
BM

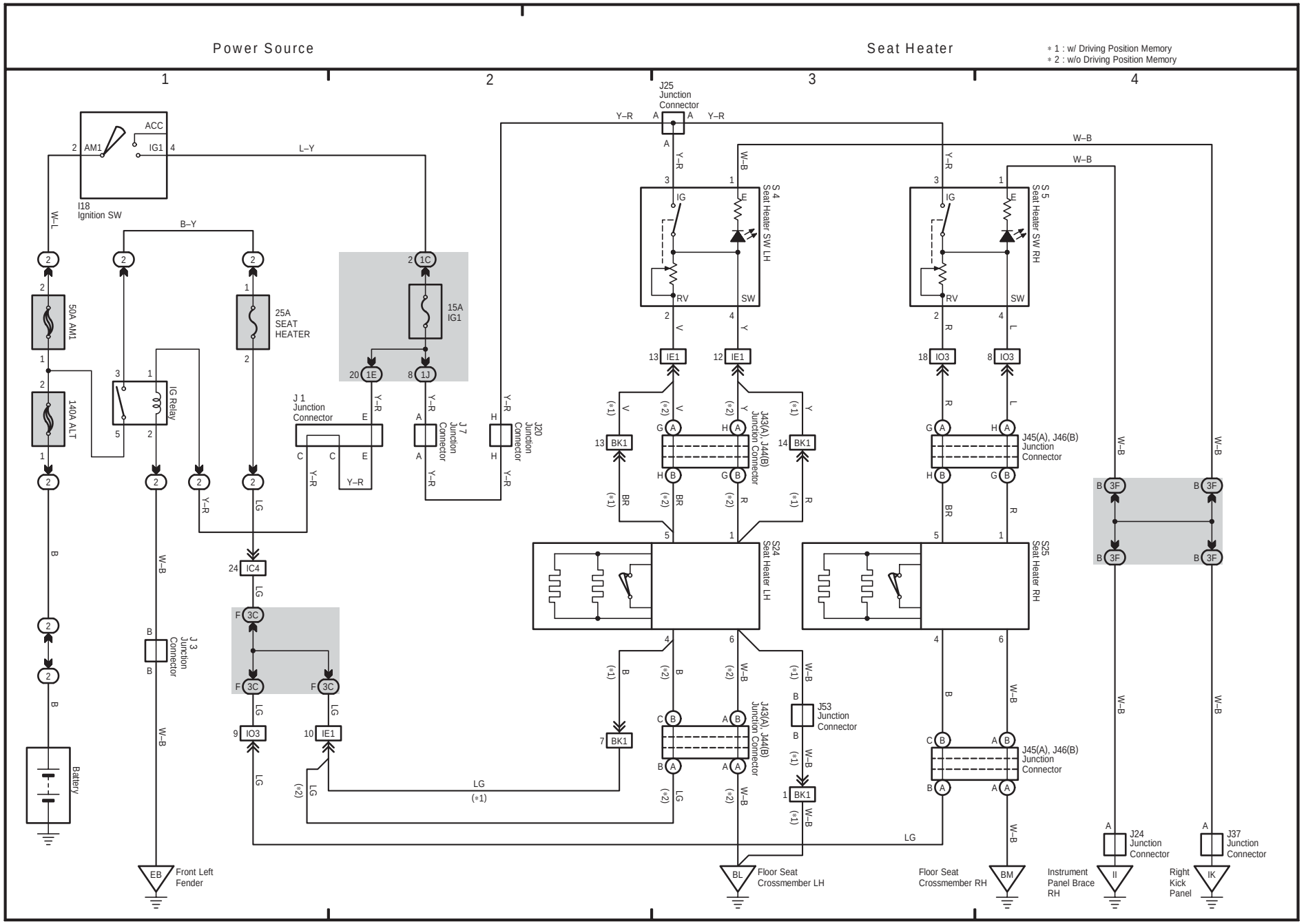
Power Source
Seat Heater
* 1 : w/ Driving Position Memory
* 2 : w/o Driving Position Memory
1
2
3
4
ACC
IG1
AM1
I18
Ignition SW
L–Y
W–L
B–Y
50A AM1
140A ALT
IG Relay
25A
SEAT
HEATER
15A
IG1
J 1
Junction
Connector
J 7
Junction
Connector
J20
Junction
Connector
J25
Junction
Connector
Y–R
W–B
S4
Seat Heater SW LH
S5
Seat Heater SW RH
IG
E
RV
SW
IE1
IO3
BK1
J43(A), J44(B)
Junction Connector
J45(A), J46(B)
Junction
Connector
J53
Junction
Connector
S24
Seat Heater LH
S25
Seat Heater RH
IC4
J 3
Junction
Connector
LG
B
BR
R
V
Y
L
3F
J24
Junction
Connector
J37
Junction
Connector
Battery
EB
Front Left
Fender
BL
Floor Seat
Crossmember LH
Floor Seat
Crossmember RH
BM
Instrument
Panel Brace
RH
II
Right
Kick
Panel
IK

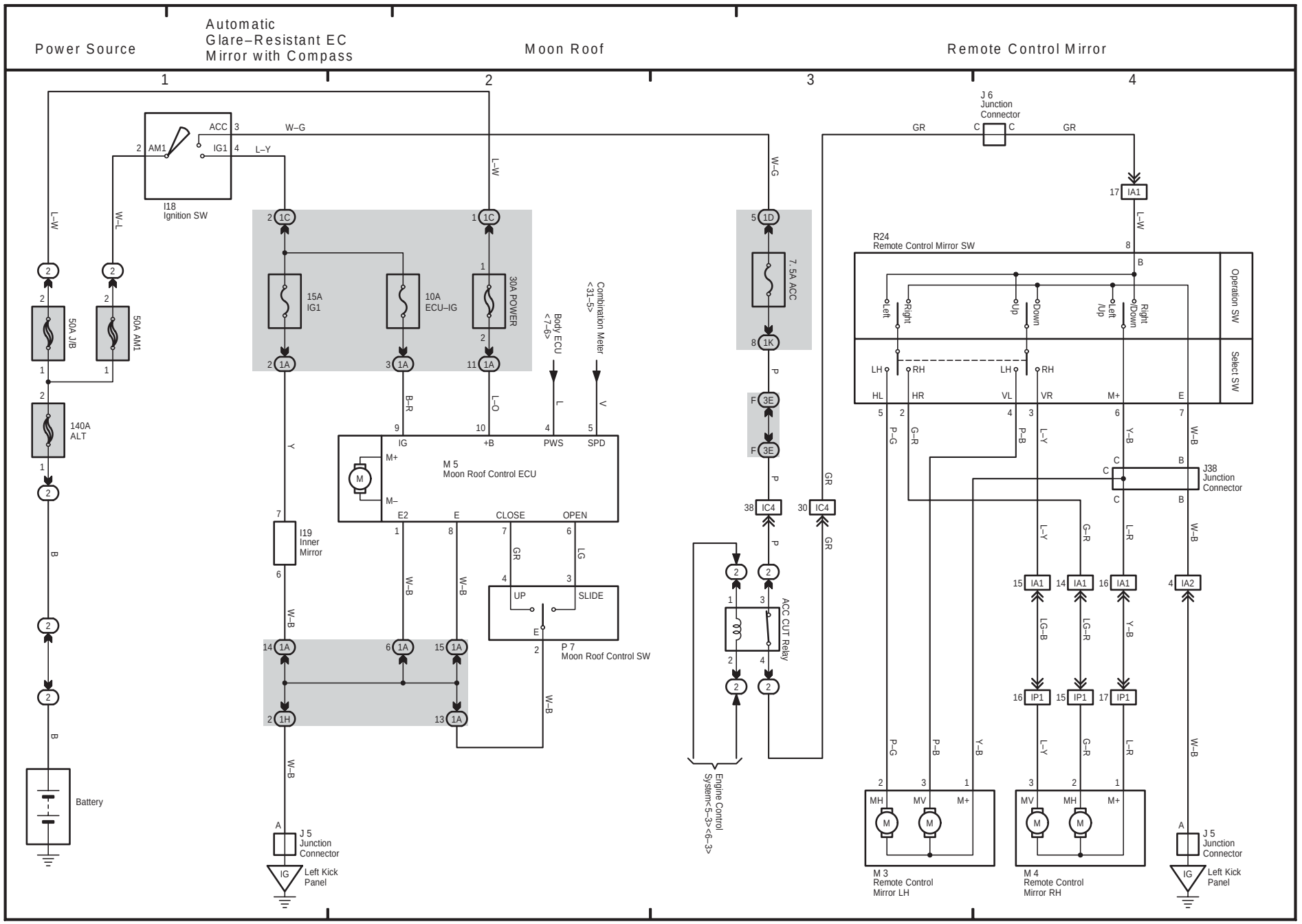
Power Source
Automatic Glare–Resistant EC Mirror with Compass
Moon Roof
Remote Control Mirror
1
2
3
4
I18 Ignition SW
ACC
AM1
IG1
W–G
L–Y
L–W
W–L
50A J/B
50A AM1
140A ALT
Battery
15A IG1
10A ECU–IG
30A POWER
Body ECU <7–6>
Combination Meter <31–5>
7.5A ACC
M 5 Moon Roof Control ECU
IG
+B
PWS
SPD
M+
M–
E2
E
CLOSE
OPEN
I19 Inner Mirror
P 7 Moon Roof Control SW
UP
SLIDE
ACC CUT Relay
Engine Control System<5–3><6–3>
J 5 Junction Connector
Left Kick Panel
J 6 Junction Connector
R24 Remote Control Mirror SW
Operation SW
Select SW
Left
Right
Up
Down
Left /Up
Right /Down
LH
RH
HL
HR
VL
VR
M+
E
J38 Junction Connector
M 3 Remote Control Mirror LH
M 4 Remote Control Mirror RH
MH
MV
M+

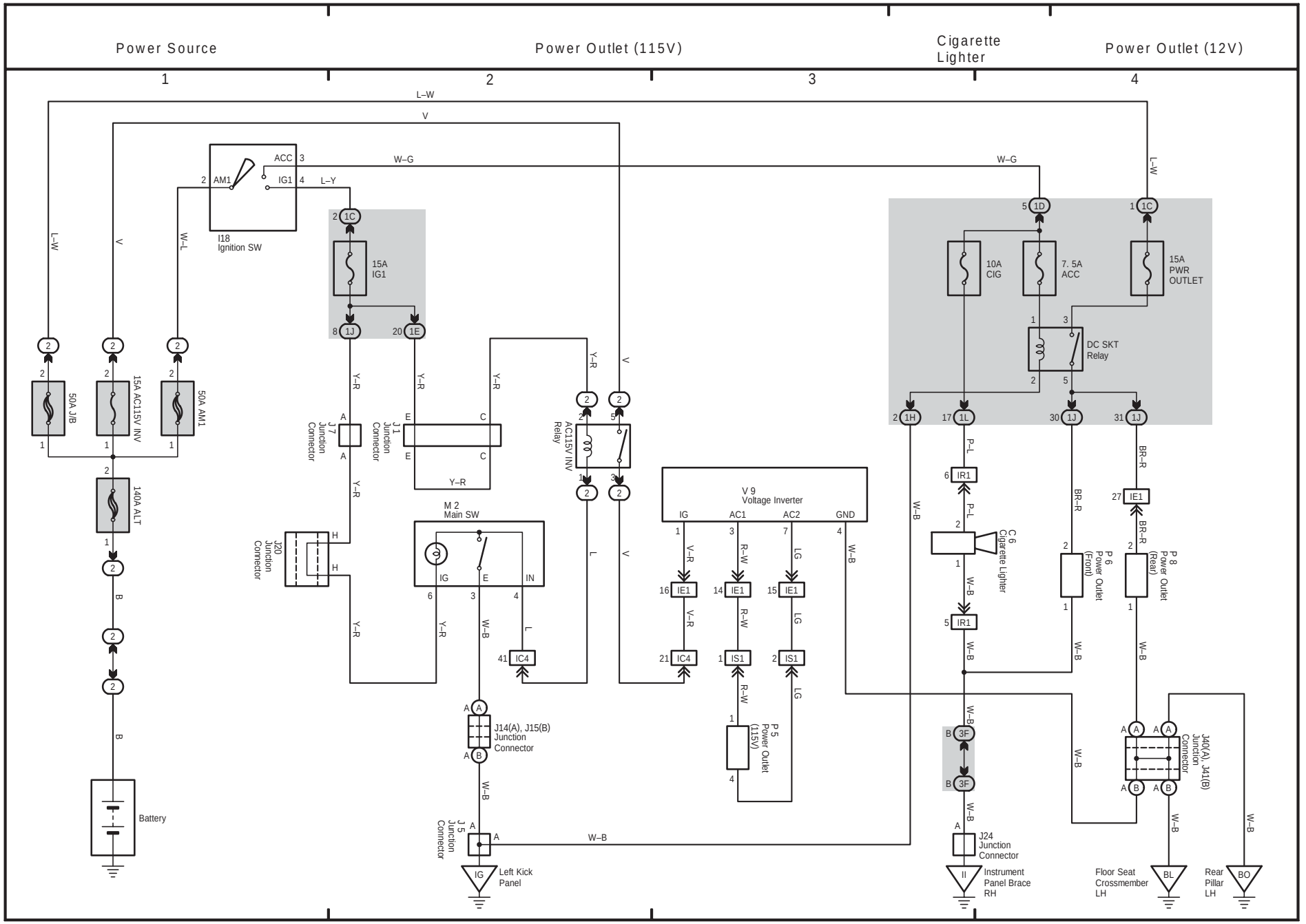
Power Source
Power Outlet (115V)
Cigarette Lighter
Power Outlet (12V)
1
2
3
4
L–W
V
W–G
L–Y
W–L
I18 Ignition SW
ACC
AM1
IG1
15A IG1
10A CIG
7. 5A ACC
15A PWR OUTLET
DC SKT Relay
50A J/B
15A AC115V INV
50A AM1
140A ALT
Battery
Y–R
J7 Junction Connector
J1 Junction Connector
AC115V INV Relay
M 2 Main SW
IG
E
IN
J20 Junction Connector
J14(A), J15(B) Junction Connector
J5 Junction Connector
Left Kick Panel
V 9 Voltage Inverter
IG
AC1
AC2
GND
V–R
R–W
LG
W–B
IC4
IS1
P 5 Power Outlet (115V)
C 6 Cigarette Lighter
P 6 Power Outlet (Front)
P 8 Power Outlet (Rear)
P–L
BR–R
IR1
IE1
J24 Junction Connector
Instrument Panel Brace RH
J40(A), J41(B) Junction Connector
Floor Seat Crossmember LH
Rear Pillar LH
BL
BO
II
IG

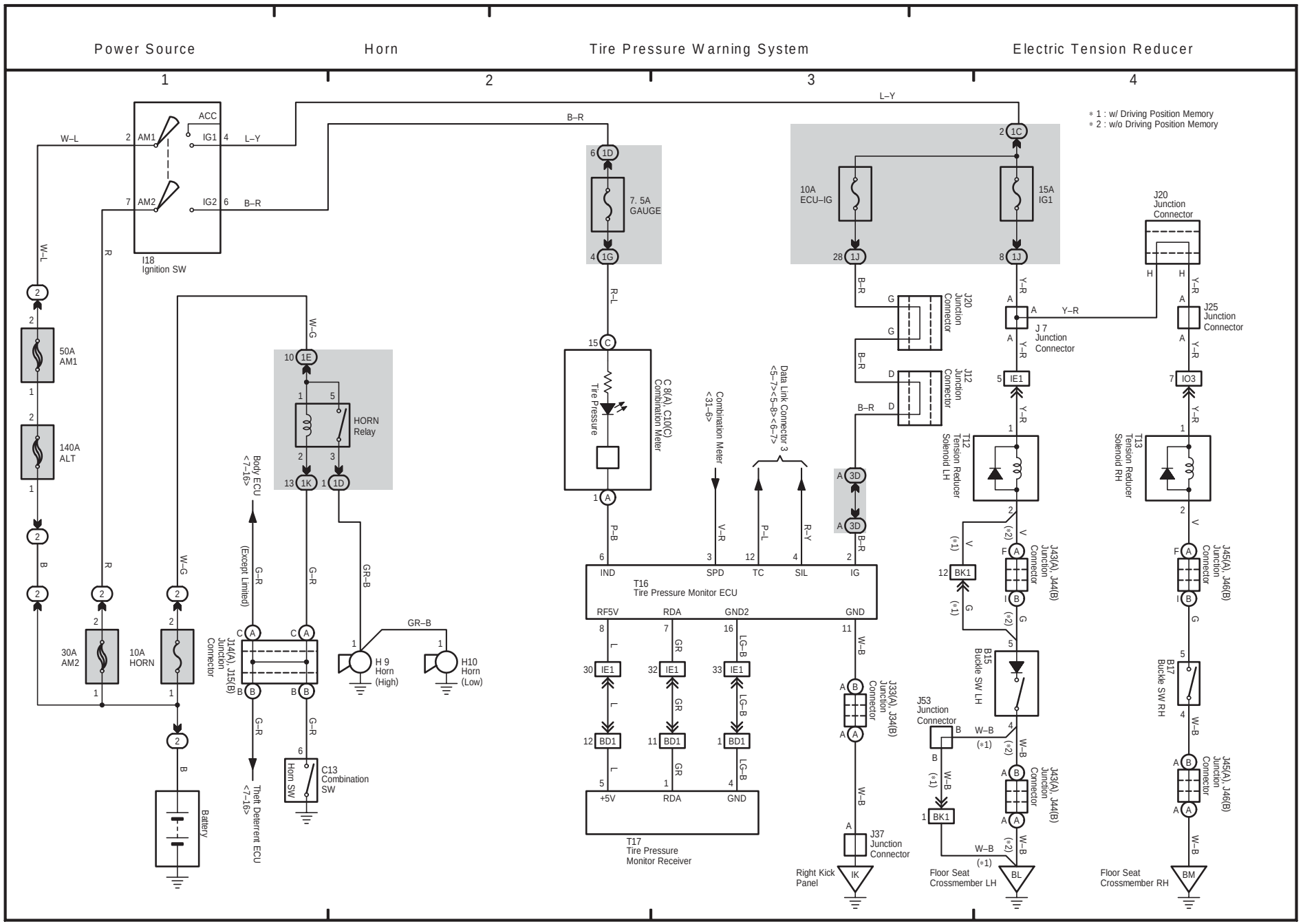
Power Source
Horn
Tire Pressure Warning System
Electric Tension Reducer
1
2
3
4
* 1 : w/ Driving Position Memory
* 2 : w/o Driving Position Memory
I18 Ignition SW
ACC
AM1
AM2
IG1
IG2
50A AM1
140A ALT
30A AM2
10A HORN
HORN Relay
Battery
Body ECU <7–16>
(Except Limited)
J14(A), J15(B) Junction Connector
H 9 Horn (High)
H10 Horn (Low)
Horn SW
C13 Combination SW
Theft Deterrent ECU <7–16>
7. 5A GAUGE
C 8(A), C10(C) Combination Meter
Tire Pressure
Combination Meter <31–6>
Data Link Connector 3 <5–7><5–8><6–7>
T16 Tire Pressure Monitor ECU
IND
SPD
TC
SIL
IG
RF5V
RDA
GND2
GND
T17 Tire Pressure Monitor Receiver
+5V
RDA
GND
J33(A), J34(B) Junction Connector
J37 Junction Connector
Right Kick Panel
10A ECU–IG
15A IG1
J20 Junction Connector
J12 Junction Connector
J 7 Junction Connector
J25 Junction Connector
T12 Tension Reducer Solenoid LH
T13 Tension Reducer Solenoid RH
J43(A), J44(B) Junction Connector
J45(A), J46(B) Junction Connector
J53 Junction Connector
B15 Buckle SW LH
B17 Buckle SW RH
Floor Seat Crossmember LH
Floor Seat Crossmember RH
W–L
L–Y
B–R
R
W–G
R–L
P–B
V–R
P–L
R–Y
G–R
GR–B
Y–R
V
G
W–B
GR
LG–B
L
B
(*1)
(*2)

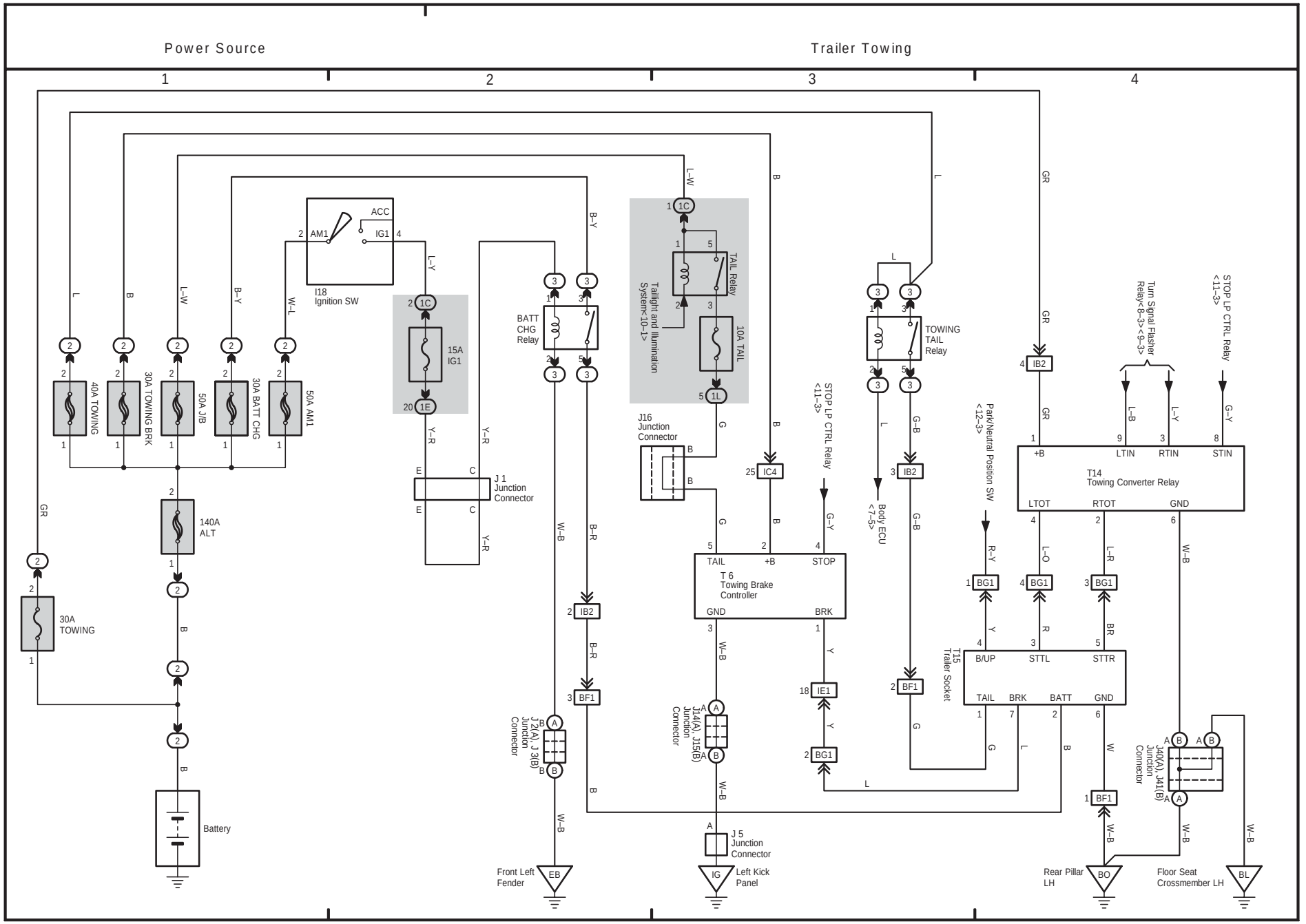
Power Source
Trailer Towing
1
2
3
4
Battery
30A TOWING
40A TOWING
30A TOWING BRK
50A J/B
30A BATT CHG
50A AM1
140A ALT
I18 Ignition SW
ACC
AM1
IG1
15A IG1
BATT CHG Relay
TAIL Relay
10A TAIL
Taillight and Illumination System<10-1>
TOWING TAIL Relay
J16 Junction Connector
J 1 Junction Connector
J2(A), J3(B) Junction Connector
J14(A), J15(B) Junction Connector
J 5 Junction Connector
J40(A), J41(B) Junction Connector
STOP LP CTRL Relay <11-3>
Turn Signal Flasher Relay<8-3><9-3>
Park/Neutral Position SW <12-3>
Body ECU <7-5>
T 6 Towing Brake Controller
T14 Towing Converter Relay
T15 Trailer Socket
Front Left Fender
Left Kick Panel
Rear Pillar LH
Floor Seat Crossmember LH

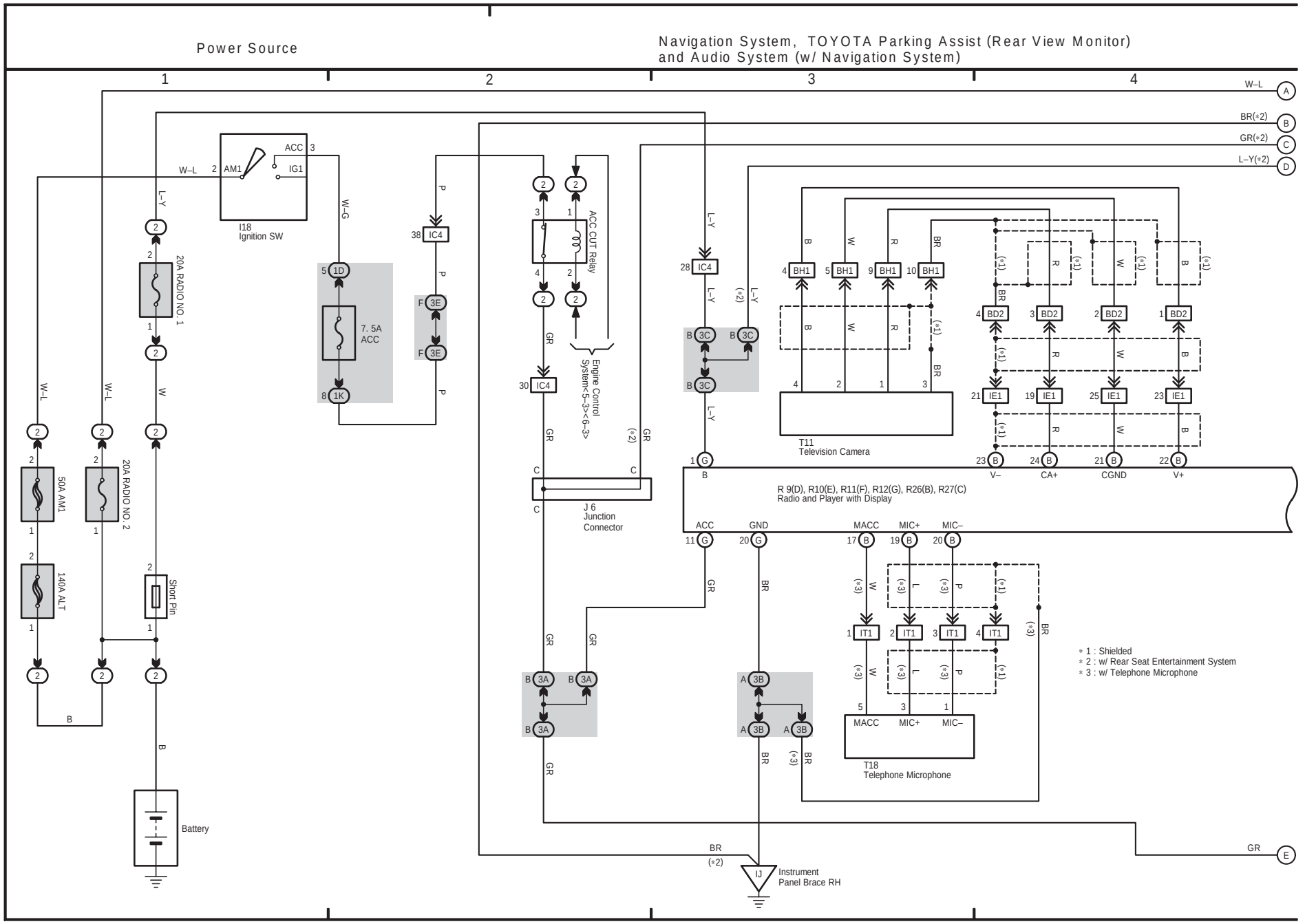
Power Source
Navigation System, TOYOTA Parking Assist (Rear View Monitor) and Audio System (w/ Navigation System)
1
2
3
4
W–L
BR(*2)
GR(*2)
L–Y(*2)
A
B
C
D
E
I18
Ignition SW
ACC
IG1
AM1
20A RADIO NO. 1
7. 5A ACC
ACC CUT Relay
Engine Control System<5–3><6–3>
J 6
Junction Connector
50A AM1
20A RADIO NO. 2
140A ALT
Short Pin
Battery
T11
Television Camera
V–
CA+
CGND
V+
R 9(D), R10(E), R11(F), R12(G), R26(B), R27(C)
Radio and Player with Display
ACC
GND
MACC
MIC+
MIC–
T18
Telephone Microphone
IJ
Instrument Panel Brace RH
* 1 : Shielded
* 2 : w/ Rear Seat Entertainment System
* 3 : w/ Telephone Microphone

(Cont. next page)

Navigation System, TOYOTA Parking Assist (Rear View Monitor) and Audio System (w/ Navigation System)

* 1 : Shielded
* 2 : w/ Rear Seat Entertainment System

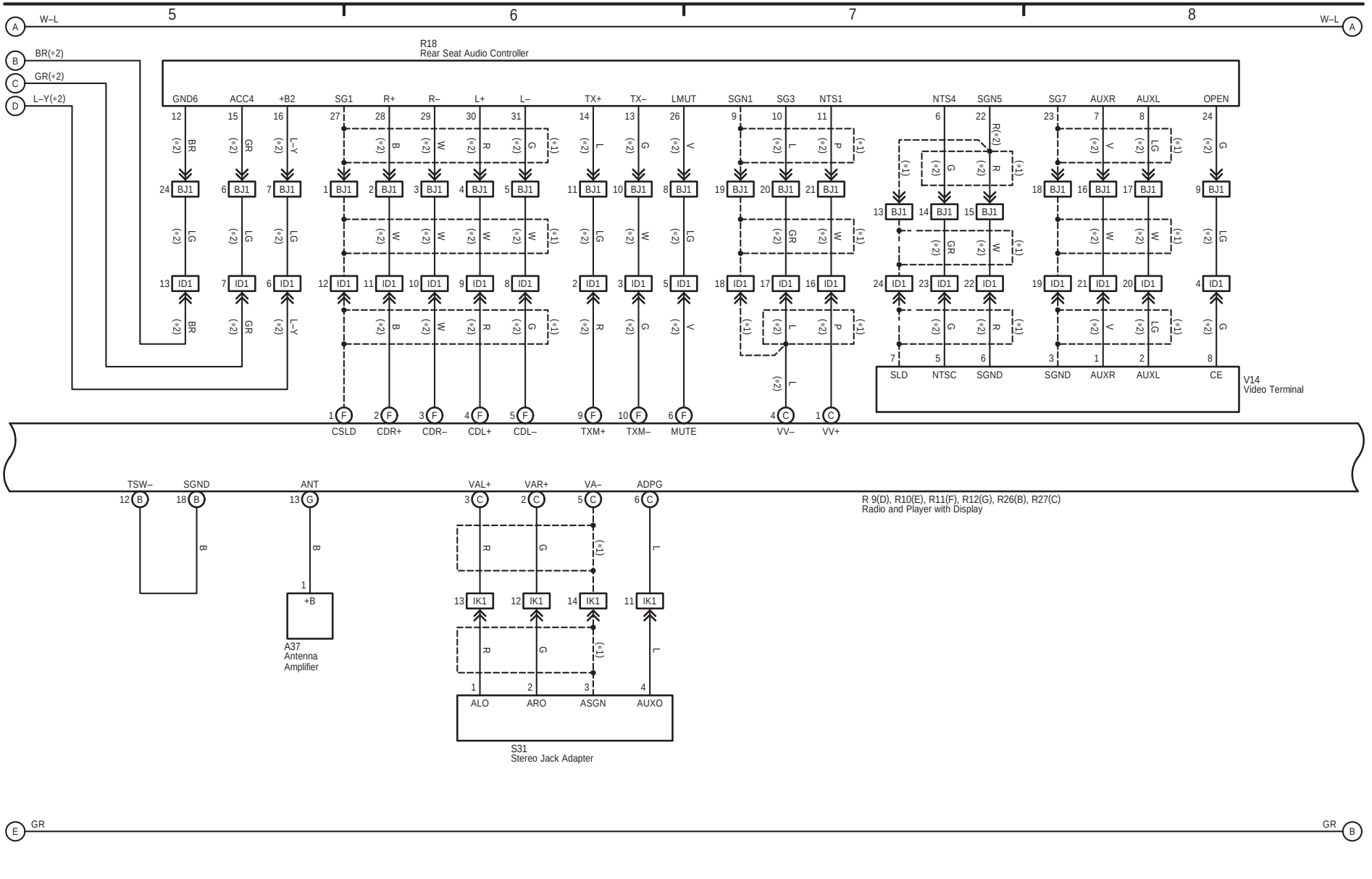

28 4RUNNER (Cont' d)

Navigation System, TOYOTA Parking Assist (Rear View Monitor) and Audio System (w/ Navigation System)

* 1 : Shielded

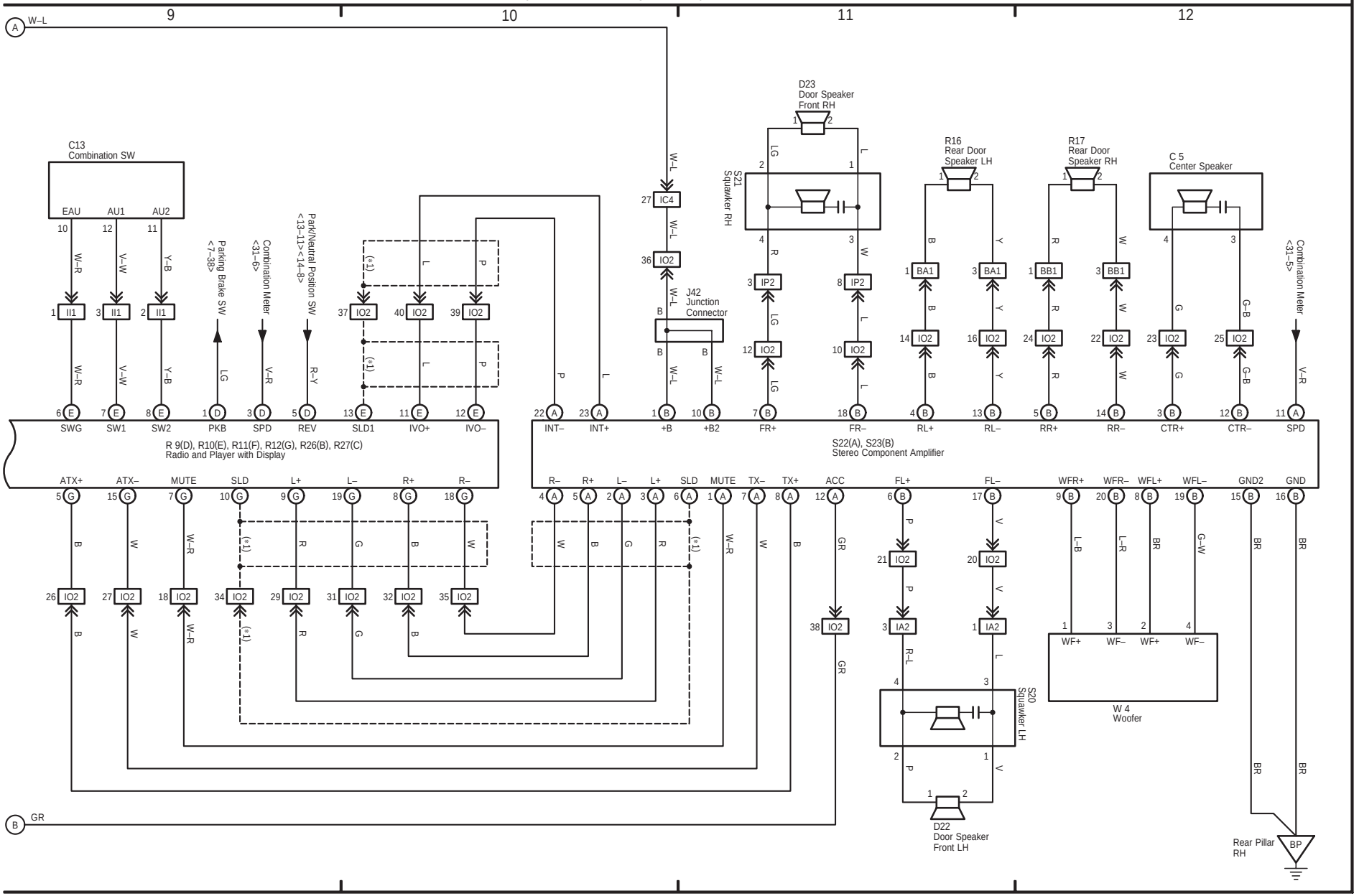

29 4RUNNER

(Cont. next page)

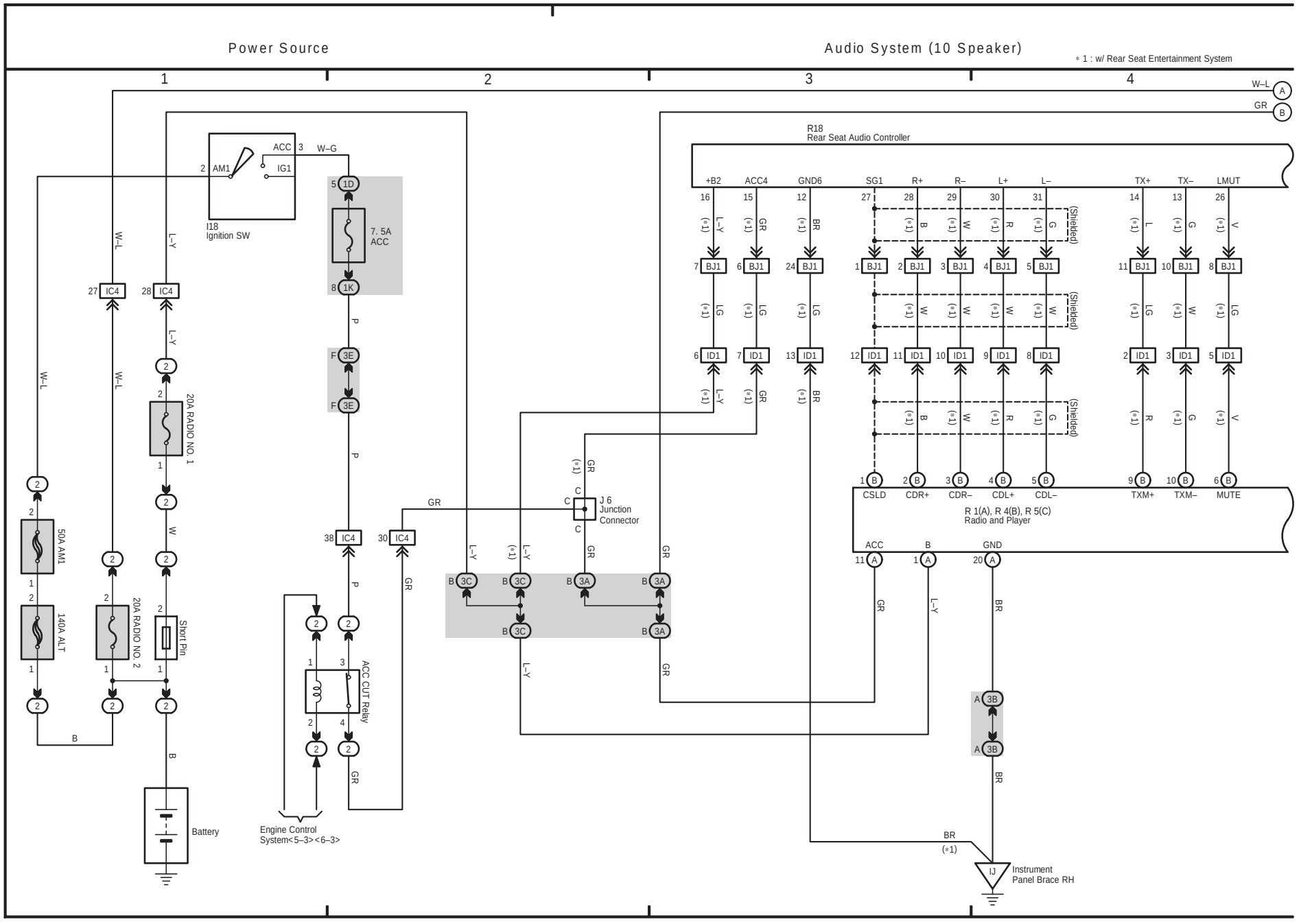

(Cont. next page)

Audio System (10 Speaker)

* 1 : w/ Rear Seat Entertainment System

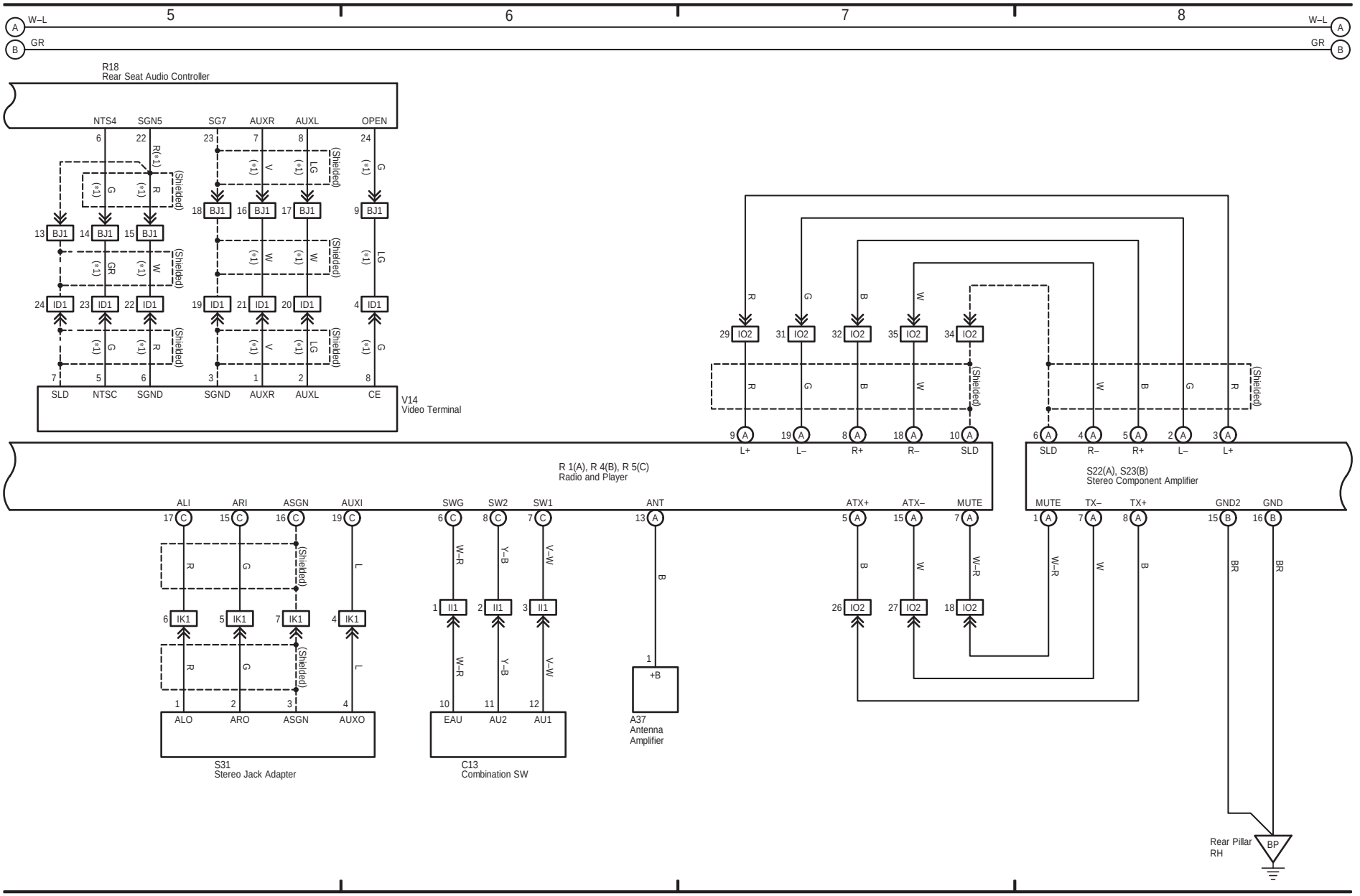

29 4RUNNER (Cont' d)

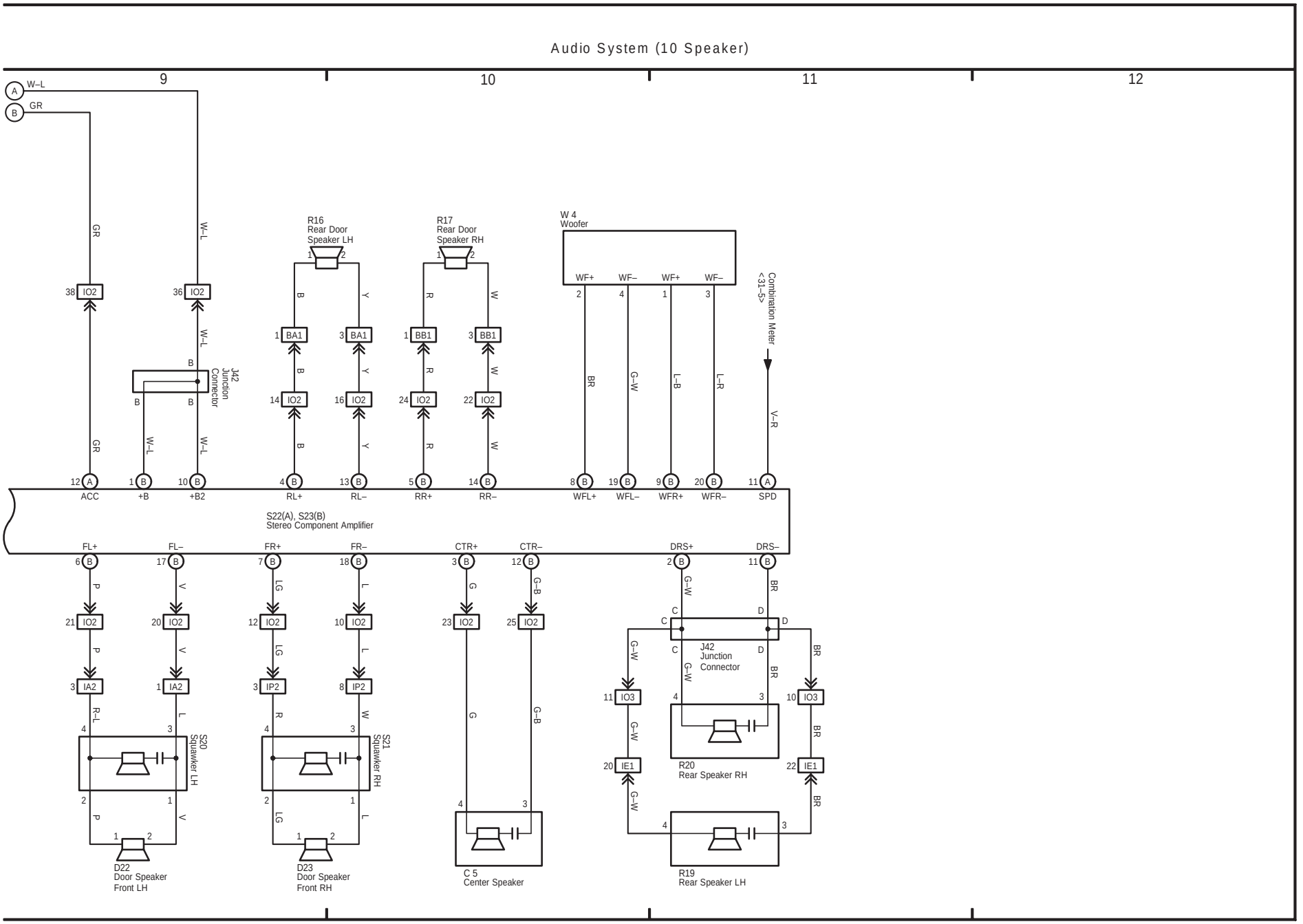

(Cont. next page)

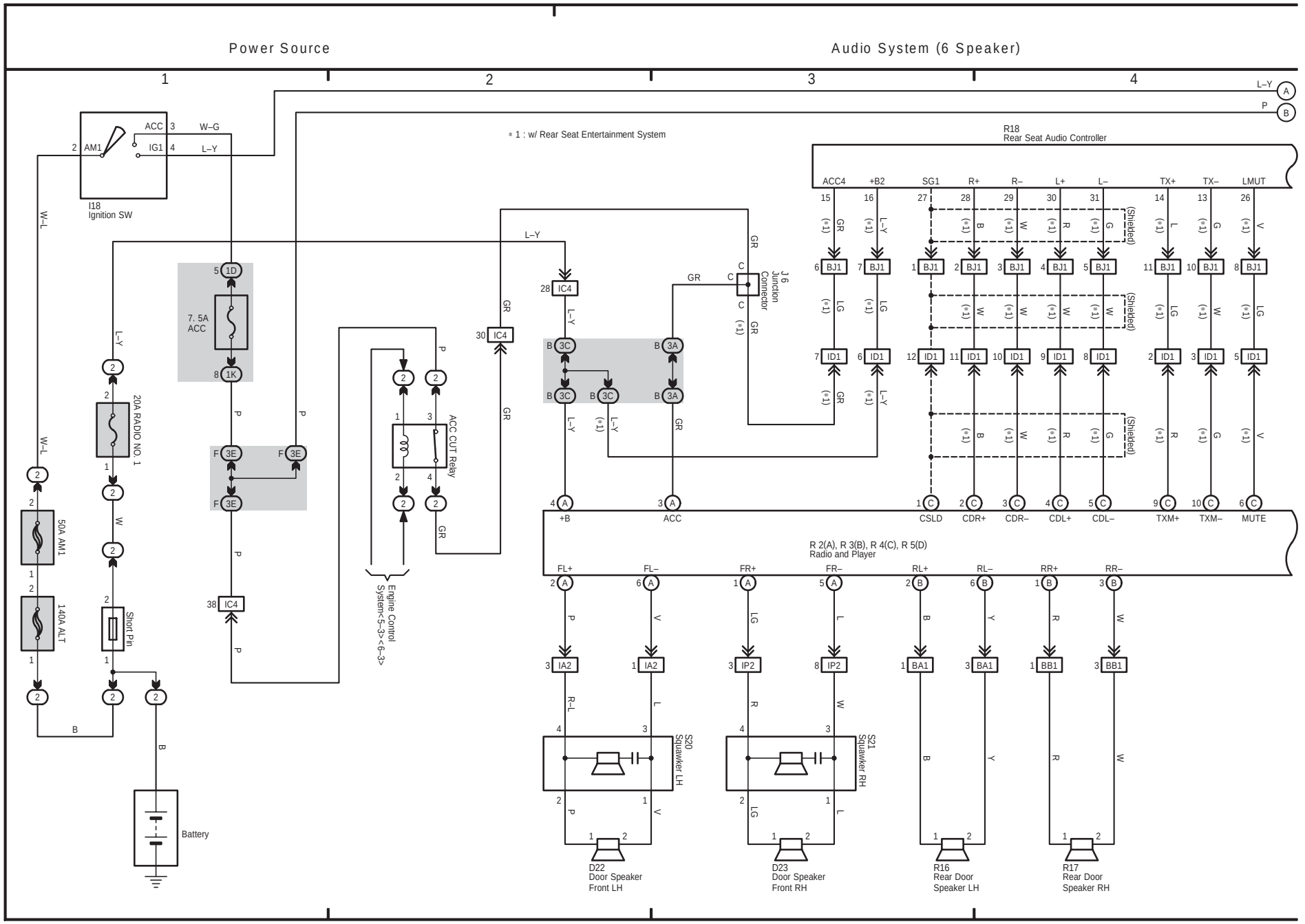

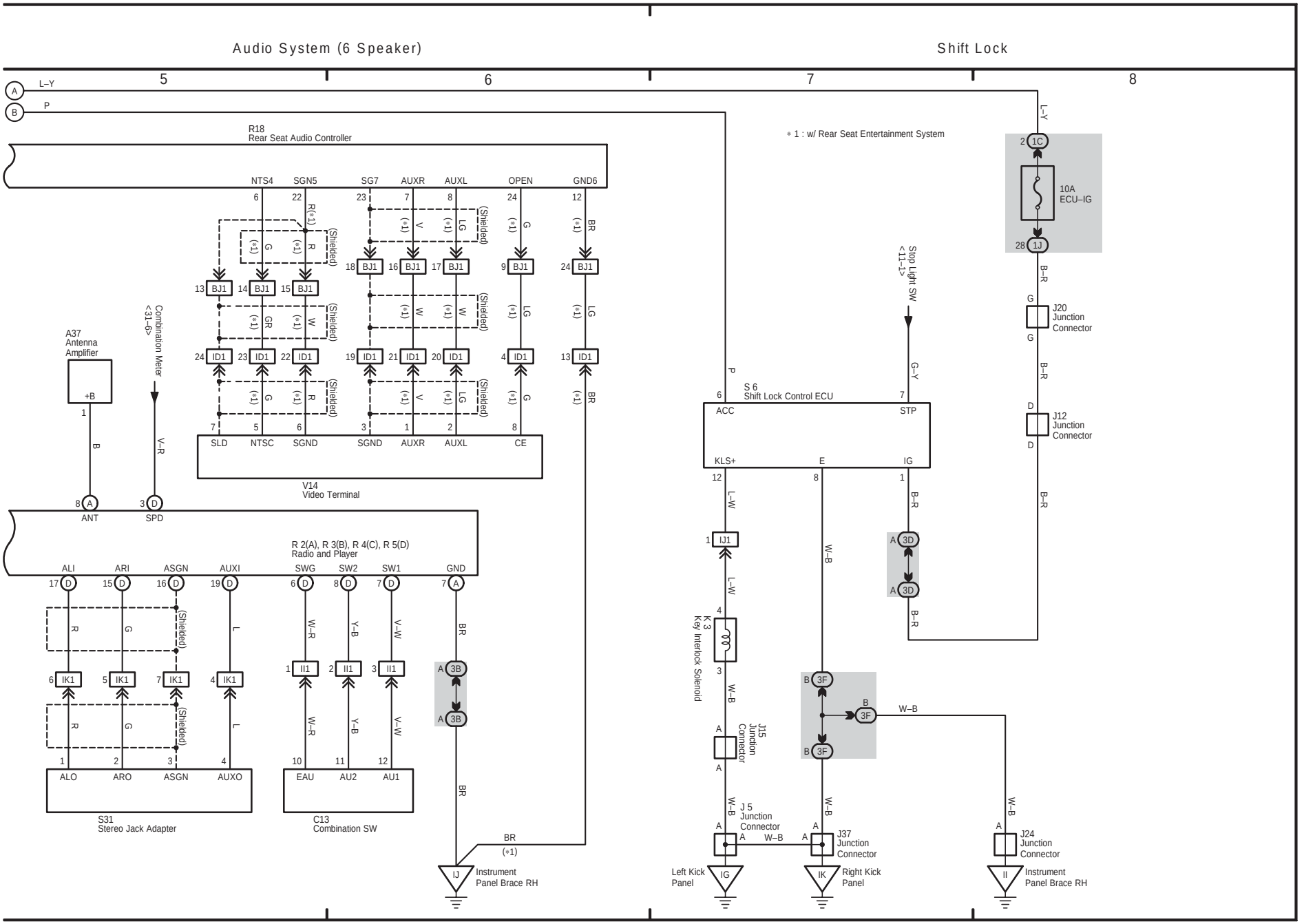
Audio System (6 Speaker)
Shift Lock
5
6
7
8
L–Y
P
R18
Rear Seat Audio Controller
NTS4
SGN5
SG7
AUXR
AUXL
OPEN
GND6
SLD
NTSC
SGND
SGND
AUXR
AUXL
CE
V14
Video Terminal
A37
Antenna
Amplifier
+B
ANT
SPD
Combination Meter
<31–6>
R 2(A), R 3(B), R 4(C), R 5(D)
Radio and Player
ALI
ARI
ASGN
AUXI
SWG
SW2
SW1
GND
ALO
ARO
ASGN
AUXO
EAU
AU2
AU1
S31
Stereo Jack Adapter
C13
Combination SW
BR
(*1)
IJ
Instrument
Panel Brace RH
* 1 : w/ Rear Seat Entertainment System
Stop Light SW
<11–1>
S 6
Shift Lock Control ECU
ACC
STP
KLS+
E
IG
K 3
Key Interlock Solenoid
J15
Junction
Connector
J 5
Junction
Connector
J37
Junction
Connector
J20
Junction
Connector
J12
Junction
Connector
J24
Junction
Connector
10A
ECU–IG
Left Kick
Panel
Right Kick
Panel
IG
IK
II
Instrument
Panel Brace RH

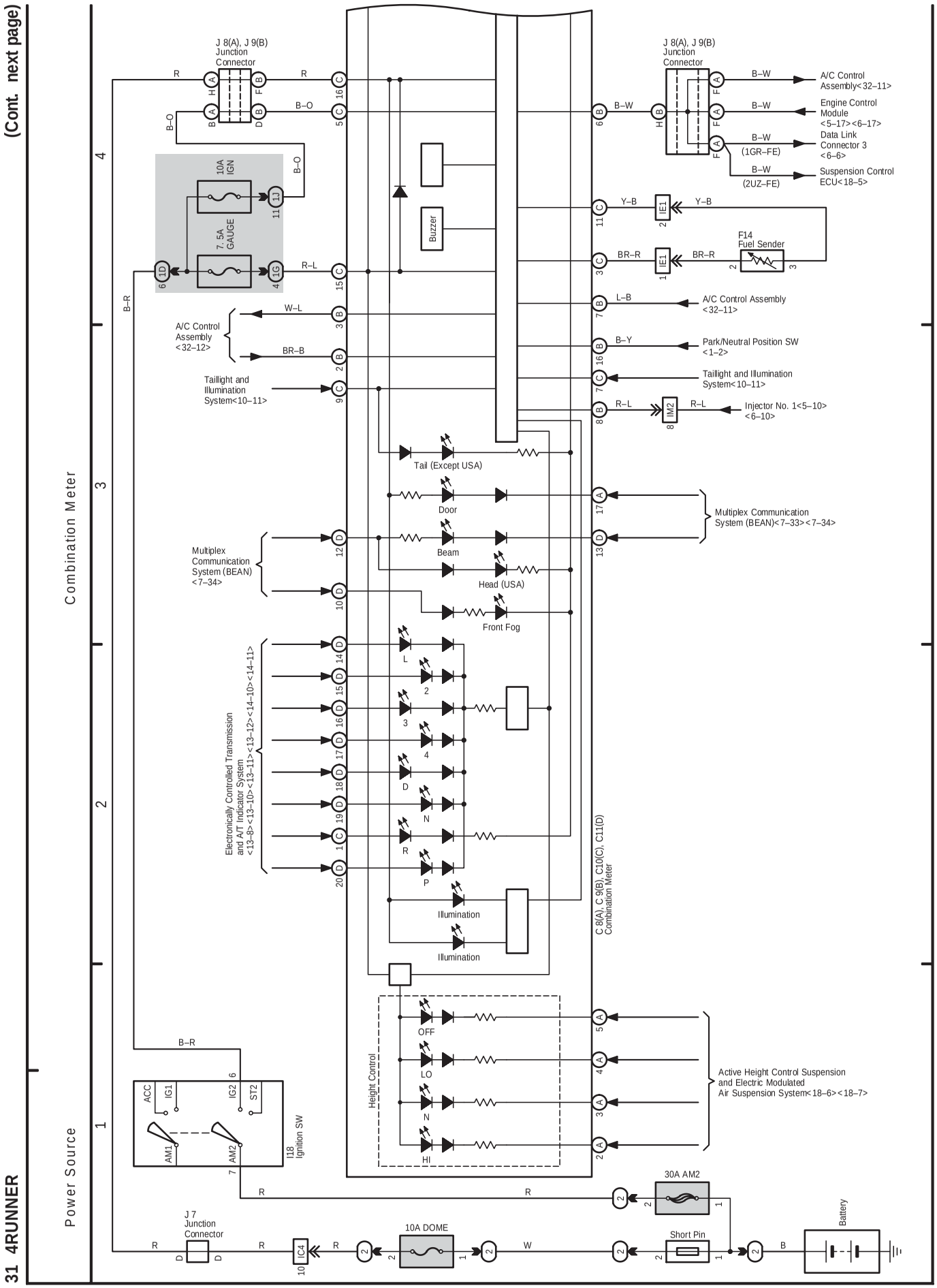
(Cont. next page)
Power Source
Combination Meter
31 4RUNNER
J 8(A), J 9(B) Junction Connector
J 7 Junction Connector
A/C Control Assembly <32–11>
Engine Control Module <5–17><6–17>
Data Link Connector 3 <6–6>
Suspension Control ECU<18–5>
(1GR–FE)
(2UZ–FE)
F14 Fuel Sender
Park/Neutral Position SW <1–2>
Taillight and Illumination System<10–11>
Injector No. 1<5–10> <6–10>
A/C Control Assembly <32–12>
Taillight and Illumination System<10–11>
Tail (Except USA)
Door
Beam
Head (USA)
Front Fog
Multiplex Communication System (BEAN)<7–33><7–34>
Multiplex Communication System (BEAN) <7–34>
Electronically Controlled Transmission and A/T Indicator System <13–8><13–10><13–11><13–12><14–10><14–11>
Illumination
C 8(A), C 9(B), C10(C), C11(D) Combination Meter
Height Control
OFF
LO
N
HI
Active Height Control Suspension and Electric Modulated Air Suspension System<18–6><18–7>
I18 Ignition SW
ACC
IG1
IG2
ST2
AM1
AM2
10A IGN
7.5A GAUGE
Buzzer
10A DOME
30A AM2
Short Pin
Battery

(Cont. next page)

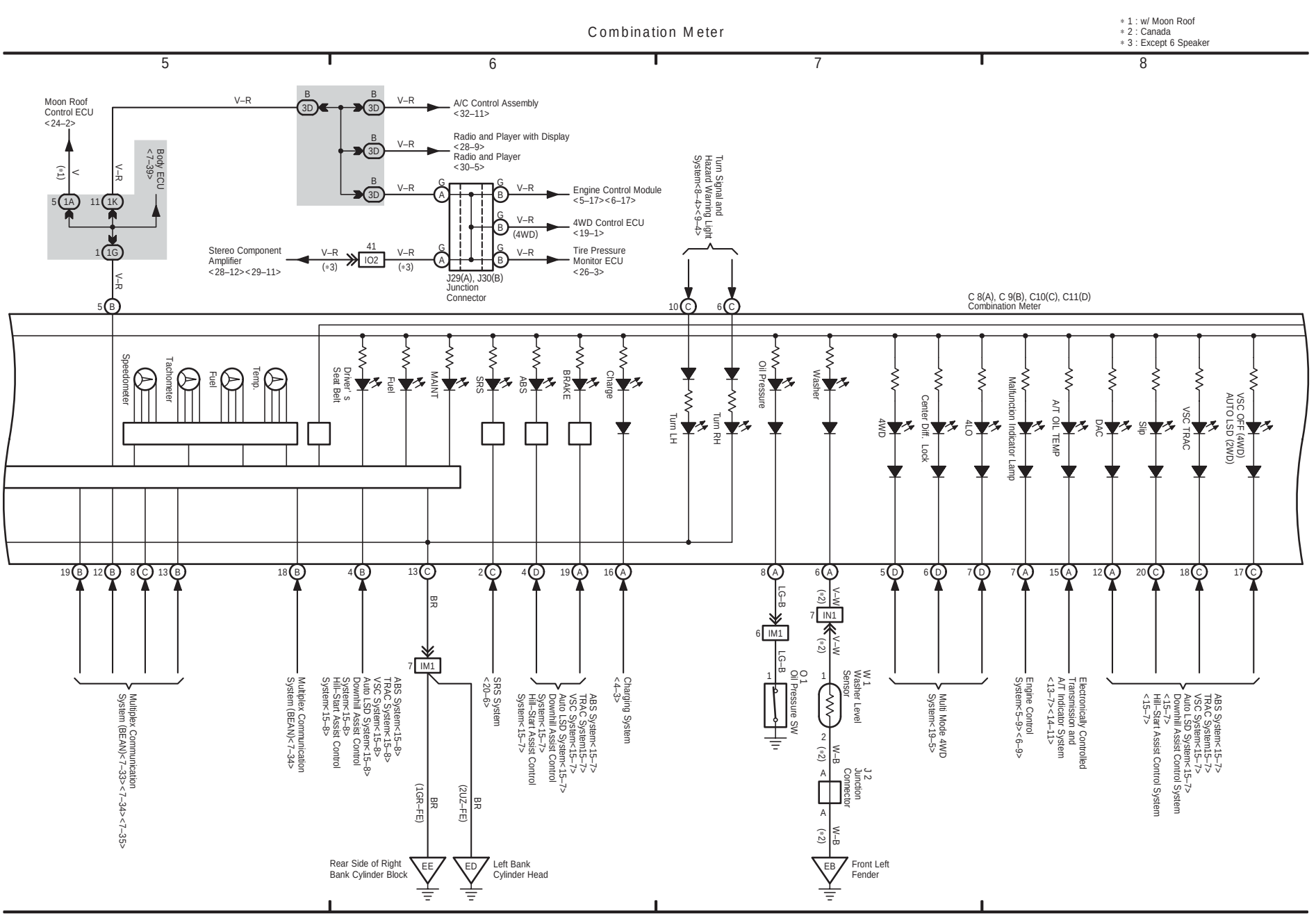

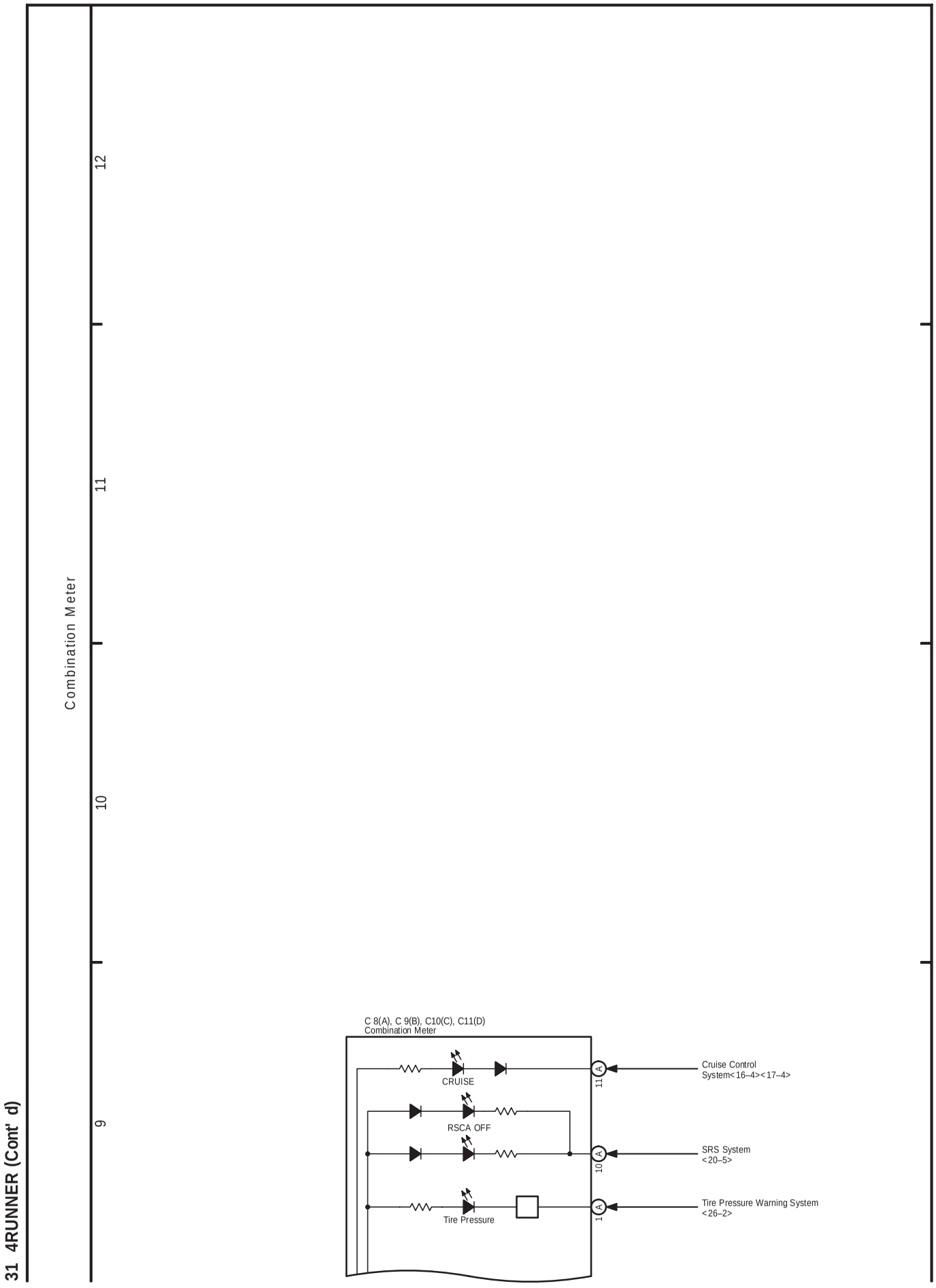
12
11
10
9
Combination Meter
31 4RUNNER (Cont' d)
C 8(A), C 9(B), C10(C), C11(D)
Combination Meter
CRUISE
RSCA OFF
Tire Pressure
11 A
10 A
1 A
Cruise Control
System<16–4><17–4>
SRS System
<20–5>
Tire Pressure Warning System
<26–2>

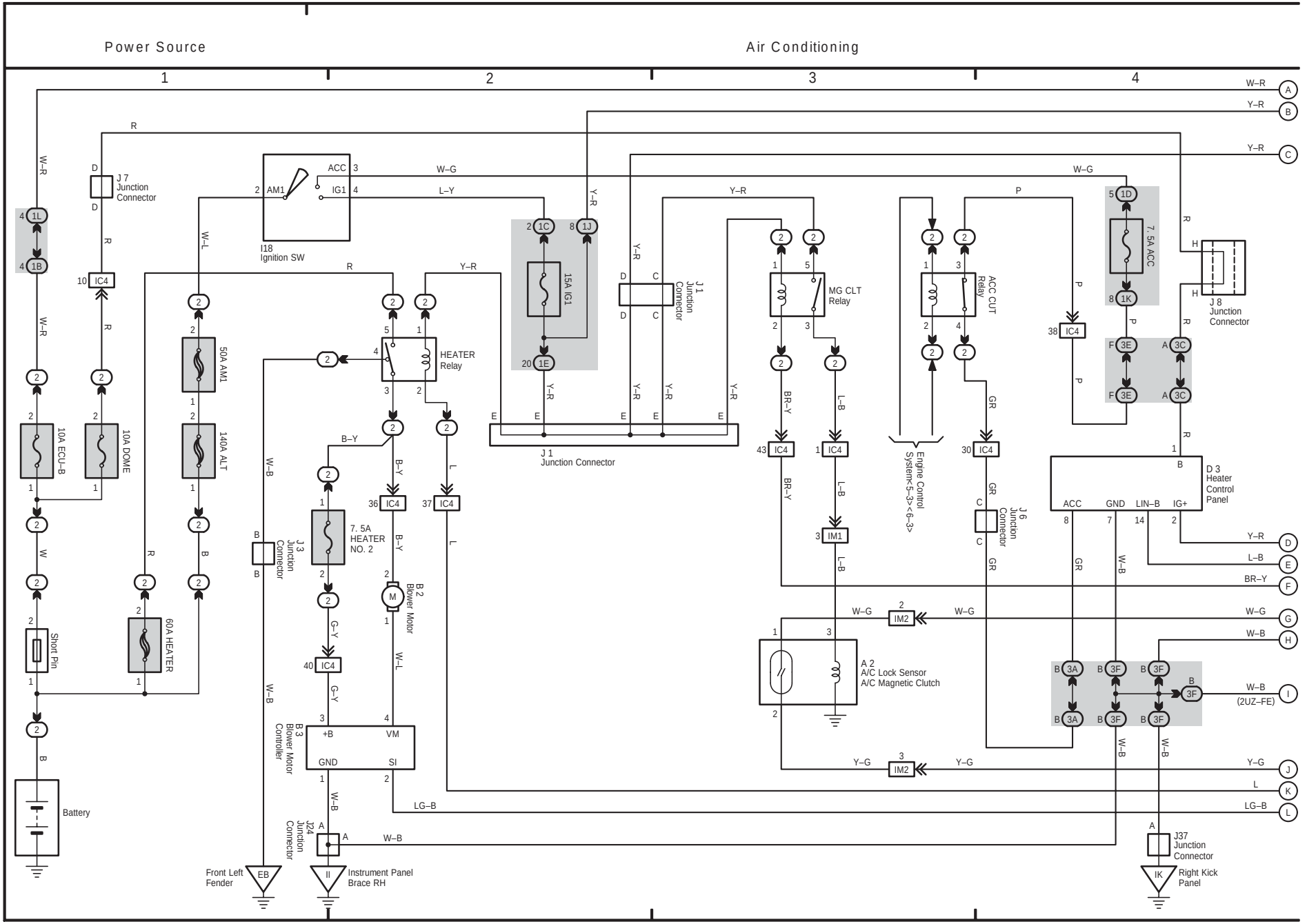
Power Source
Air Conditioning
1
2
3
4
W–R
Y–R
R
W–G
L–Y
W–L
Y–R
P
L–B
BR–Y
GR
B–Y
L
G–Y
W–B
LG–B
Y–G
W
B
J 7 Junction Connector
I18 Ignition SW
ACC
AM1
IG1
15A IG1
J 1 Junction Connector
MG CLT Relay
ACC CUT Relay
7. 5A ACC
J 8 Junction Connector
HEATER Relay
50A AM1
140A ALT
10A ECU–B
10A DOME
60A HEATER
Short Pin
Battery
7. 5A HEATER NO. 2
B 2 Blower Motor
B 3 Blower Motor Controller
J 3 Junction Connector
J 24 Junction Connector
A 2 A/C Lock Sensor A/C Magnetic Clutch
IM1
IM2
Engine Control System<5–3><6–3>
J 6 Junction Connector
D 3 Heater Control Panel
ACC
GND
LIN–B
IG+
J37 Junction Connector
Front Left Fender
Instrument Panel Brace RH
Right Kick Panel
(2UZ–FE)
(Cont. next page)

(Cont. next page)

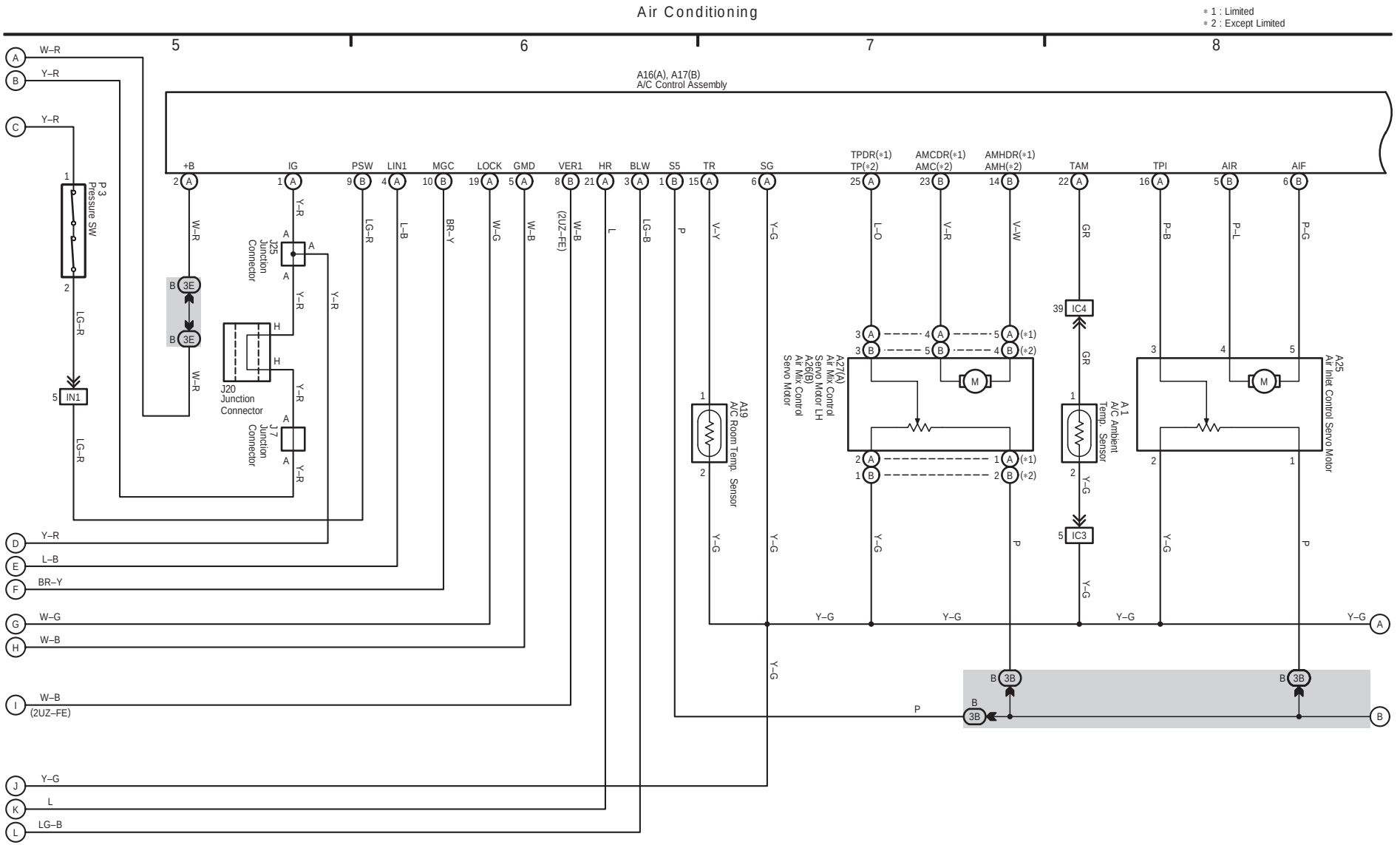

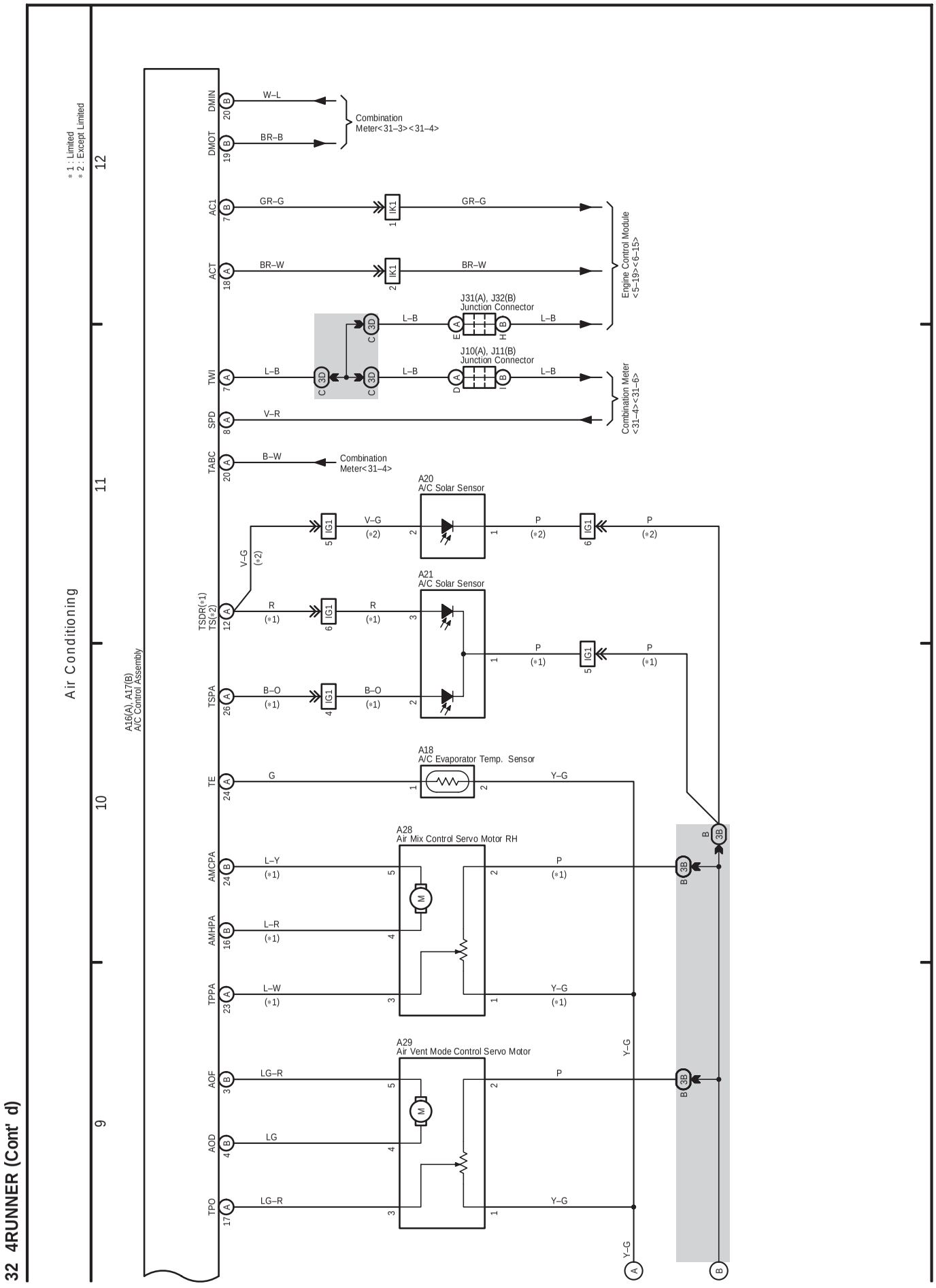
32 4RUNNER (Cont' d)
Air Conditioning
A16(A), A17(B)
A/C Control Assembly
* 1 : Limited
* 2 : Except Limited
DMIN
DMOT
AC1
ACT
TWI
SPD
TABC
TSDR(*1)
TS(*2)
TSPA
TE
AMCPA
AMHPA
TPPA
AOF
AOD
TPO
W–L
BR–B
Combination Meter<31–3><31–4>
GR–G
BR–W
L–B
V–R
B–W
Combination Meter<31–4>
Engine Control Module <5–19><6–15>
Combination Meter <31–4><31–6>
J31(A), J32(B) Junction Connector
J10(A), J11(B) Junction Connector
A20 A/C Solar Sensor
A21 A/C Solar Sensor
A18 A/C Evaporator Temp. Sensor
A28 Air Mix Control Servo Motor RH
A29 Air Vent Mode Control Servo Motor
V–G
P
R
B–O
G
Y–G
L–Y
L–R
L–W
LG–R
LG
(*1)
(*2)
IG1
IK1
3D
3B
9
10
11
12

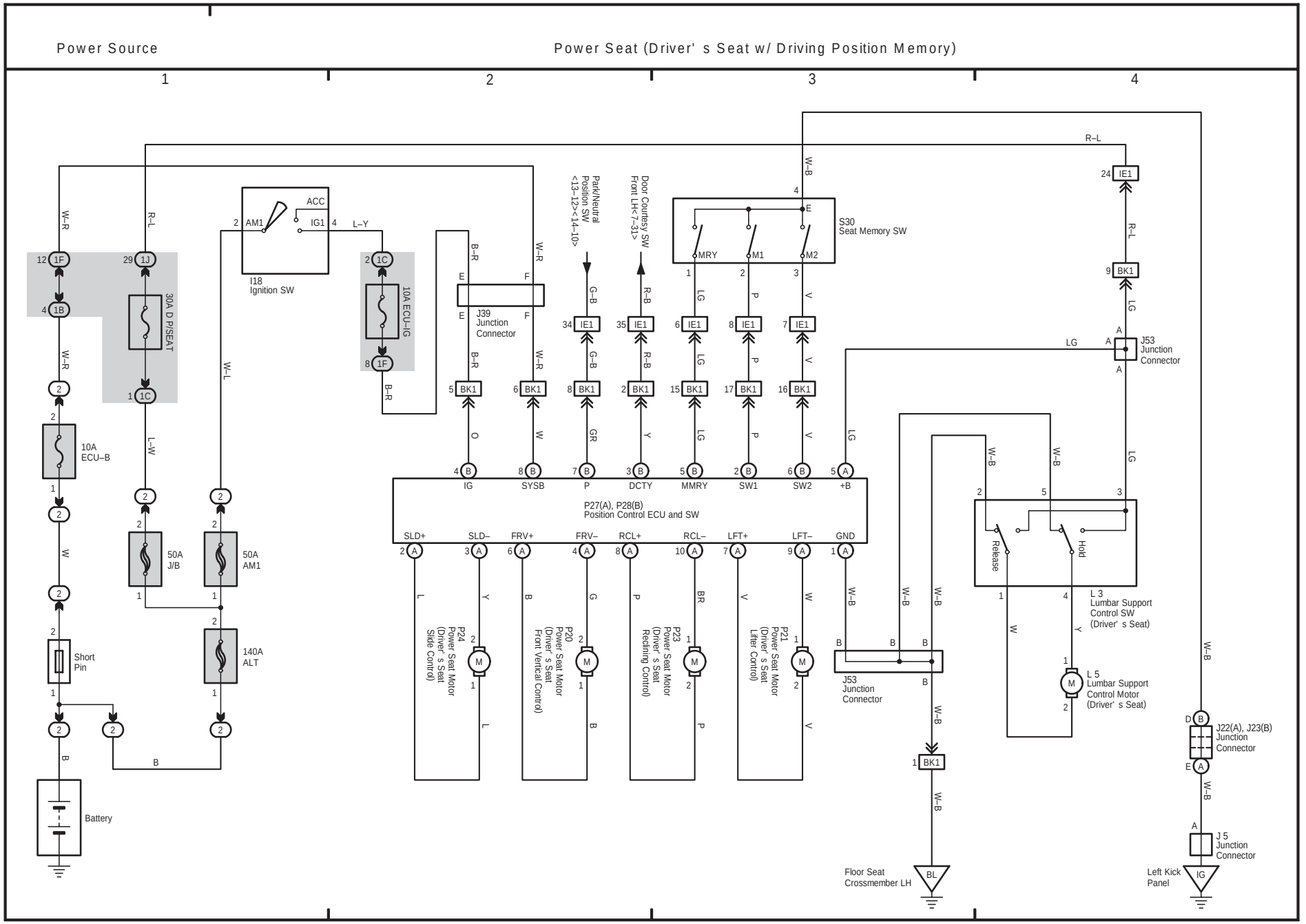
Power Source
Power Seat (Driver' s Seat w/ Driving Position Memory)
1
2
3
4
Battery
10A ECU–B
30A D P/SEAT
50A J/B
50A AM1
140A ALT
Short Pin
I18 Ignition SW
ACC
AM1
IG1
10A ECU–IG
J39 Junction Connector
Park/Neutral Position SW <13–12><14–10>
Door Courtesy SW Front LH<7–31>
S30 Seat Memory SW
MRY
M1
M2
P27(A), P28(B) Position Control ECU and SW
IG
SYSB
P
DCTY
MMRY
SW1
SW2
+B
SLD+
SLD–
FRV+
FRV–
RCL+
RCL–
LFT+
LFT–
GND
P24 Power Seat Motor (Driver' s Seat Slide Control)
P20 Power Seat Motor (Driver' s Seat Front Vertical Control)
P23 Power Seat Motor (Driver' s Seat Reclining Control)
P21 Power Seat Motor (Driver' s Seat Lifter Control)
J53 Junction Connector
L 3 Lumbar Support Control SW (Driver' s Seat)
Release
Hold
L 5 Lumbar Support Control Motor (Driver' s Seat)
J22(A), J23(B) Junction Connector
J 5 Junction Connector
Floor Seat Crossmember LH
Left Kick Panel
BL
IG

2006 4RUNNER ELECTRICAL WIRING DIAGRAM SYSTEM CIRCUITS

	Page
ABS	258
Active Height Control Suspension	268
Air Conditioning	358
Audio System (w/ Navigation System)	334
Audio System (10 Speaker)	342
Audio System (6 Speaker)	348
Auto LSD	258
Automatic Glare–Resistant EC Mirror with Compass	302
Automatic Light Control	140
Back–Up Light	174
Charging	68
Cigarette Lighter	296
Combination Meter	352
Cruise Control (1GR–FE)	252
Cruise Control (2UZ–FE)	246
Door Lock Control	202
Downhill Assist Control	258
Electric Modulated Air Suspension	268
Electric Tension Reducer	306
Electronically Controlled Transmission and A/T Indicator (1GR–FE)	238
Electronically Controlled Transmission and A/T Indicator (2UZ–FE)	230
Engine Control (1GR–FE)	84
Engine Control (2UZ–FE)	70
Engine Immobiliser System	98
Front Fog Light	136
Front Wiper and Washer	184
Garage Door Opener	182
Headlight	130
Hill–Start Assist Control	258
Horn	304
Ignition (1GR–FE)	64
Ignition (2UZ–FE)	60
Illumination	162
Interior Light	154
Key Reminder	176
Light Auto Turn Off System	142
Mirror Heater	330
Moon Roof	288
Multi Mode 4WD	274
Multiplex Communication System (BEAN)	104
Multiplex Communication System (BEAN Bus)	100
Multiplex Communication System (CAN Bus)	102
Navigation System	334
Power Outlet (115V)	300
Power Outlet (12V)	298
Power Seat (Driver's Seat w/ Driving Position Memory)	308
Power Seat (Driver's Seat w/o Driving Position Memory)	312

	Page
Power Seat (Front Passenger's Seat)	316
Power Source	54
Power Window	192
Rear Window Defogger	330
Rear Wiper and Washer	186
Remote Control Mirror	294
Seat Belt Warning	178
Seat Heater	318
Shift Lock	292
SRS	281
Starting	58
Stop Light	170
Taillight	162
Theft Deterrent	222
Tire Pressure Warning System	326
TOYOTA Parking Assist (Rear View Monitor)	334
TRAC	258
Trailer Towing	322
Turn Signal and Hazard Warning Light (w/ Daytime Running Light)	146
Turn Signal and Hazard Warning Light (w/o Daytime Running Light)	150
VSC	258
Wireless Door Lock Control	212

F RELAY LOCATIONS

[Engine Compartment]

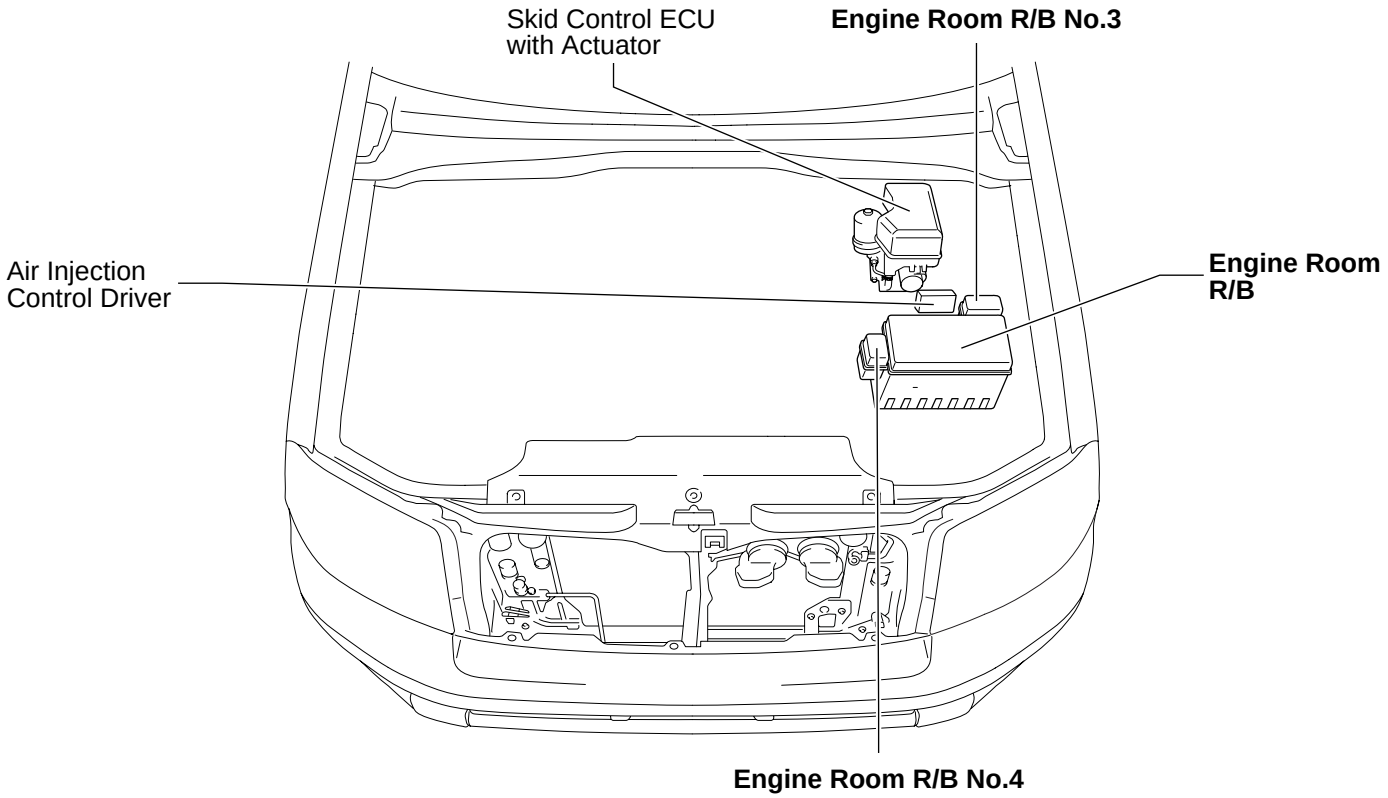

[Body]

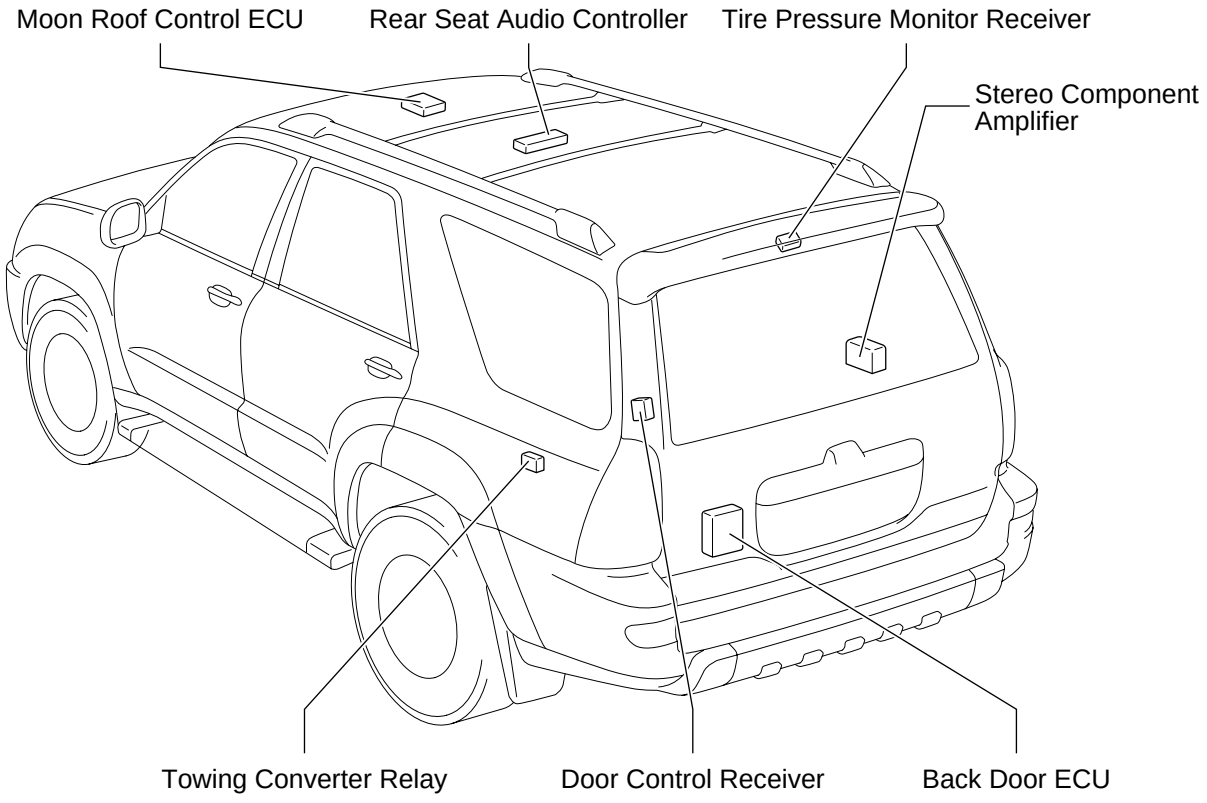

[Instrument Panel]

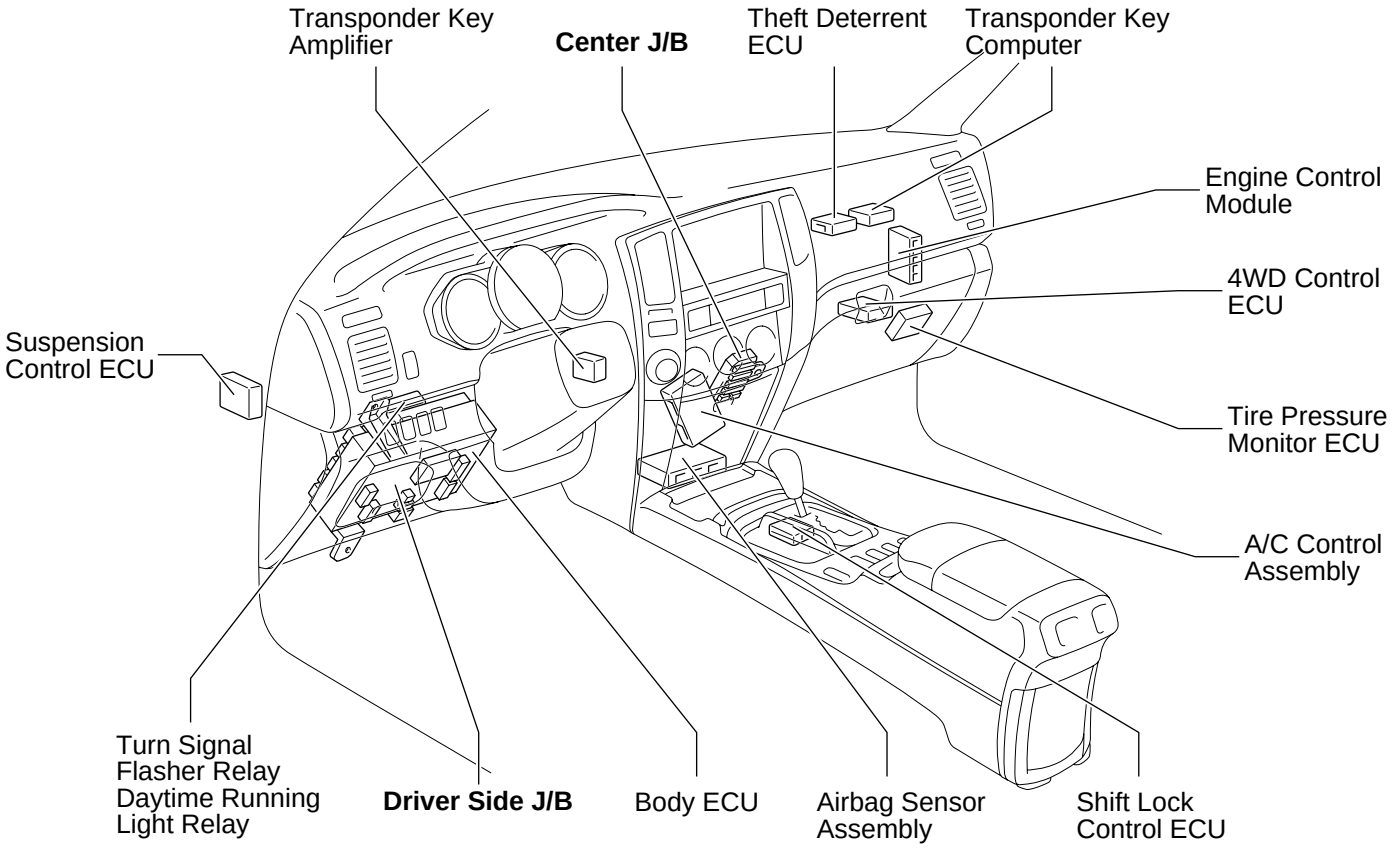

[Seat]

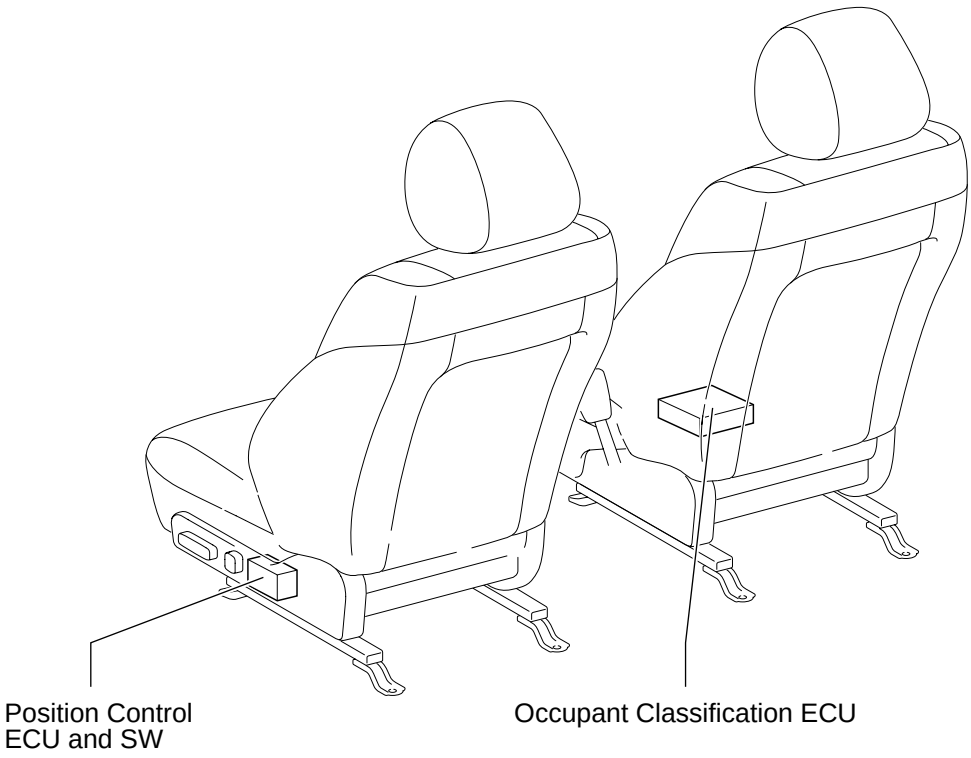

F RELAY LOCATIONS

② : Engine Room R/B	Engine Compartment Left (See Page 20)

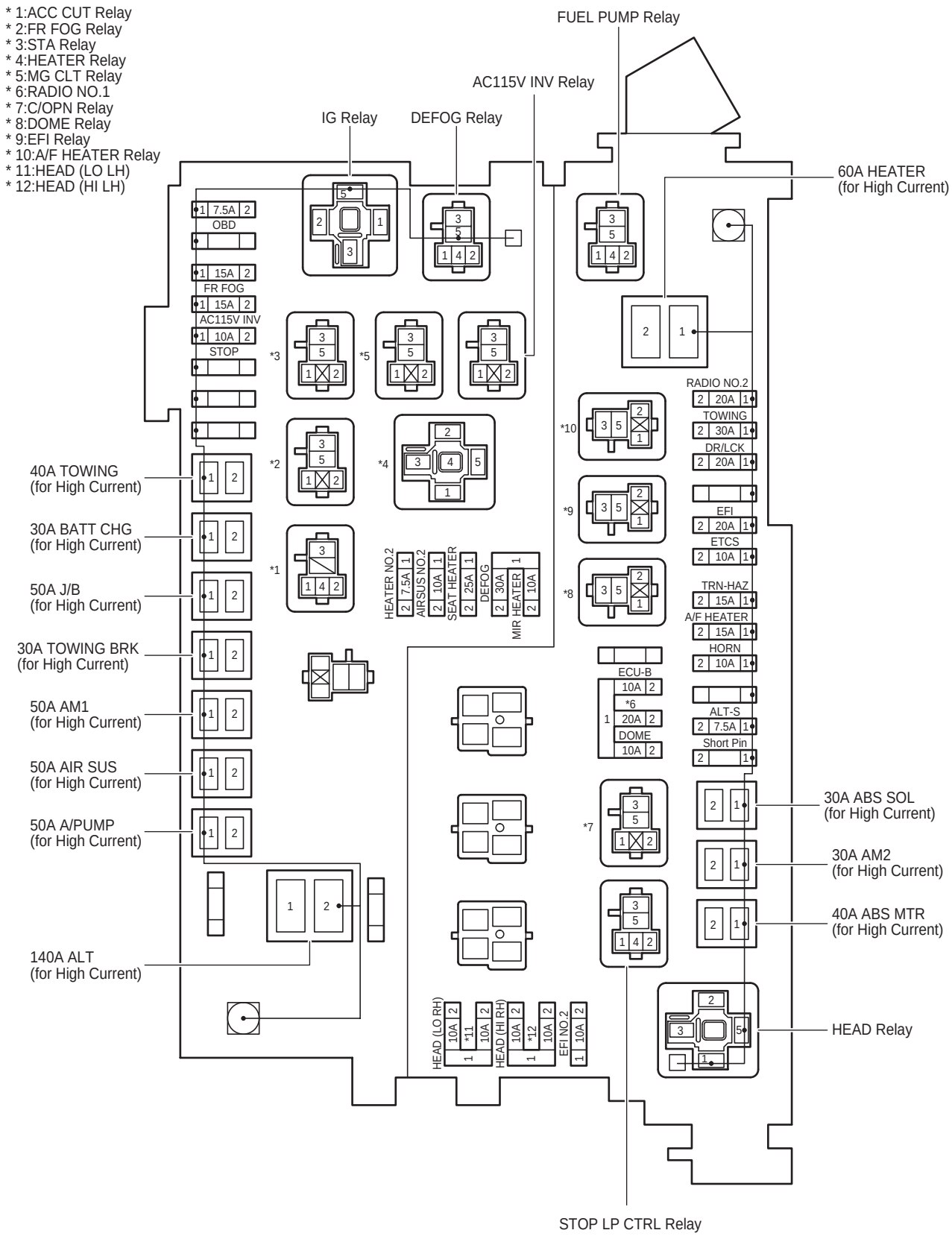

③ : Engine Room R/B No.3	Engine Compartment Left (See Page 20)

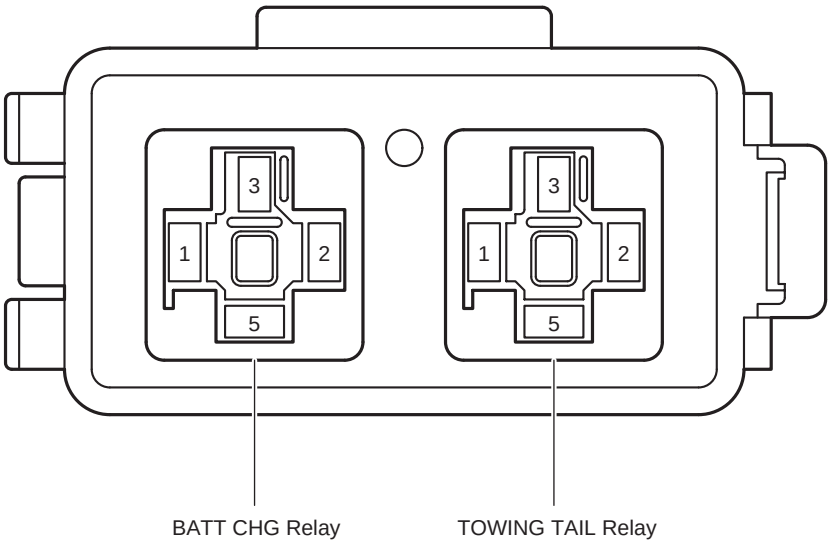

④ : Engine Room R/B No.4	Engine Compartment Left (See Page 20)

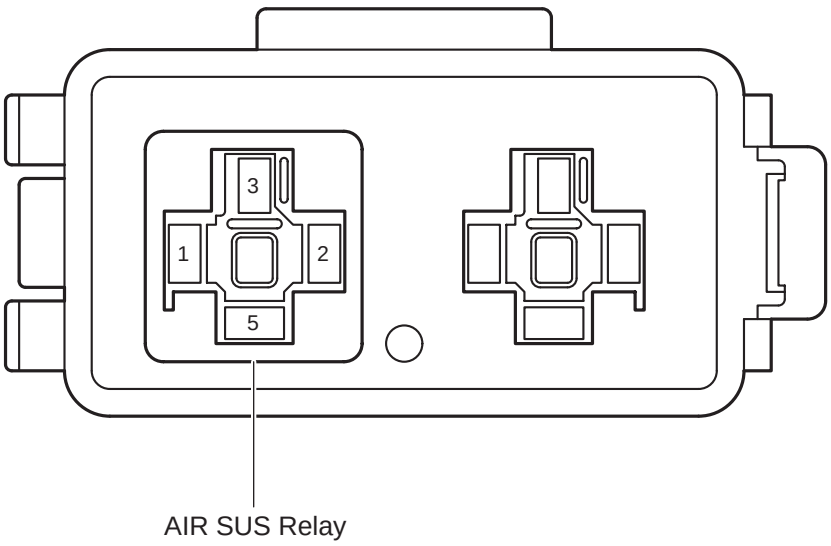

F RELAY LOCATIONS

: Driver Side J/B	Lower Finish Panel (See Page 21)

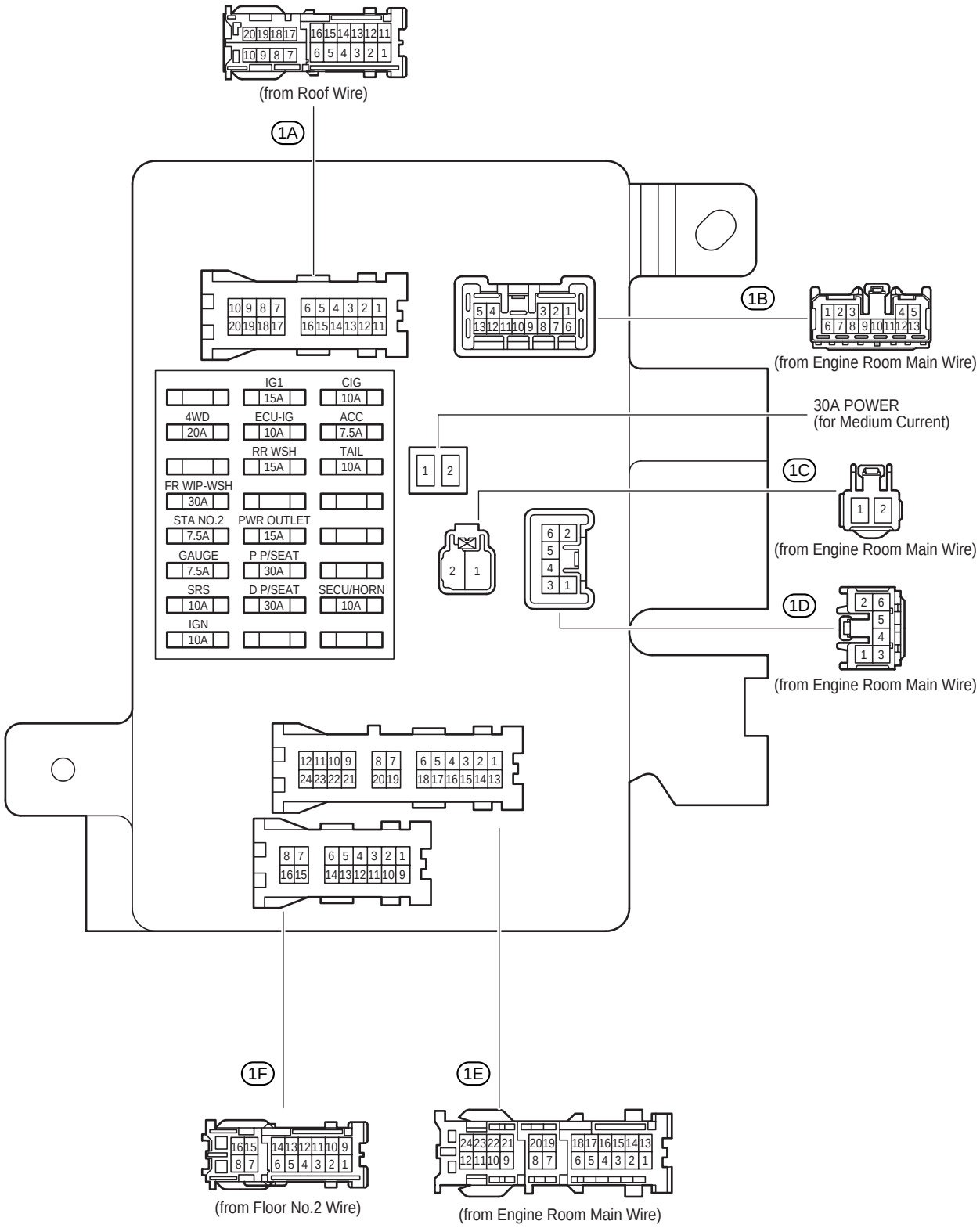

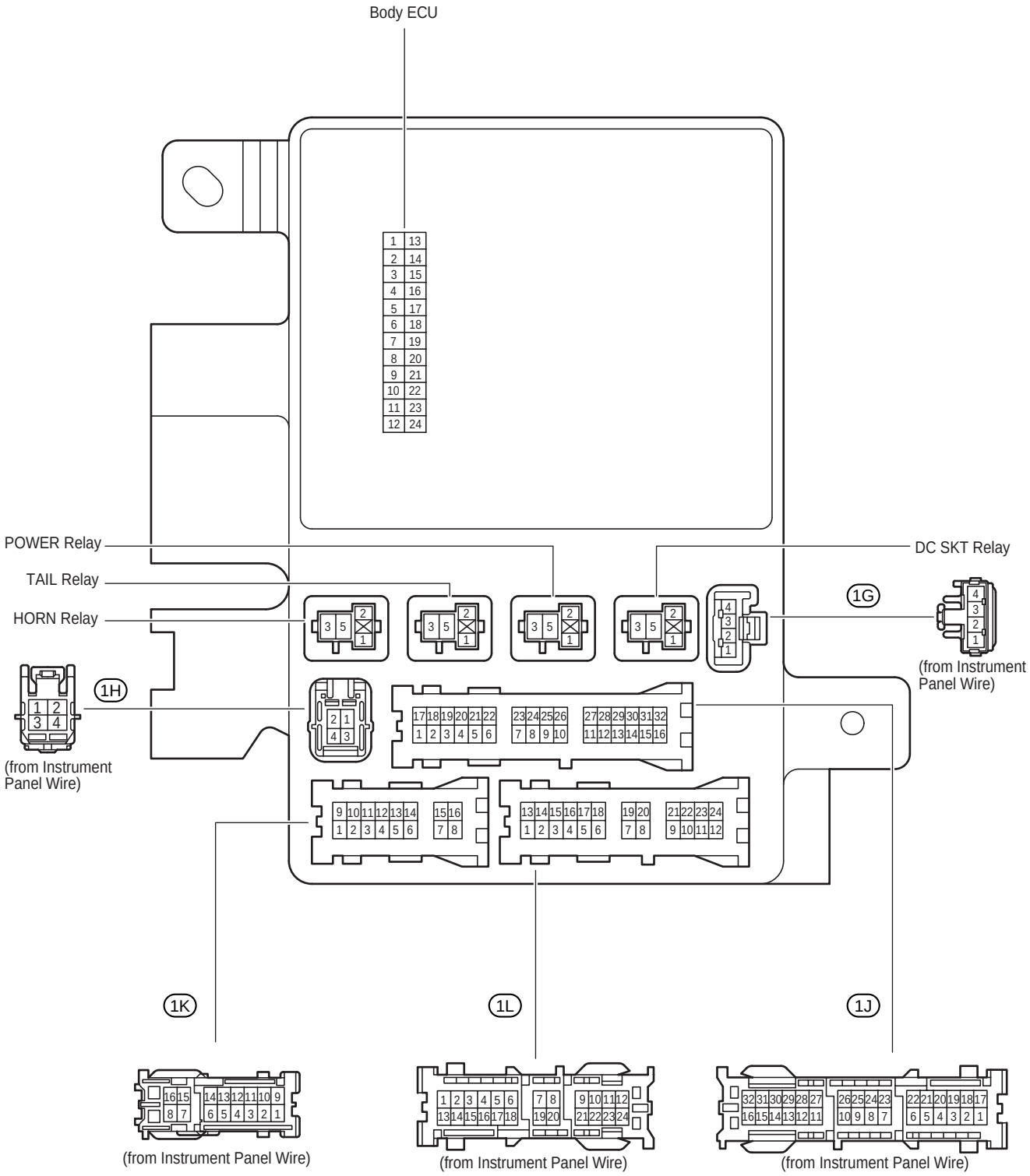
Body ECU
POWER Relay
TAIL Relay
HORN Relay
DC SKT Relay
1G
(from Instrument Panel Wire)
1H
(from Instrument Panel Wire)
1K
(from Instrument Panel Wire)
1L
(from Instrument Panel Wire)
1J
(from Instrument Panel Wire)

[Driver Side J/B Inner Circuit]

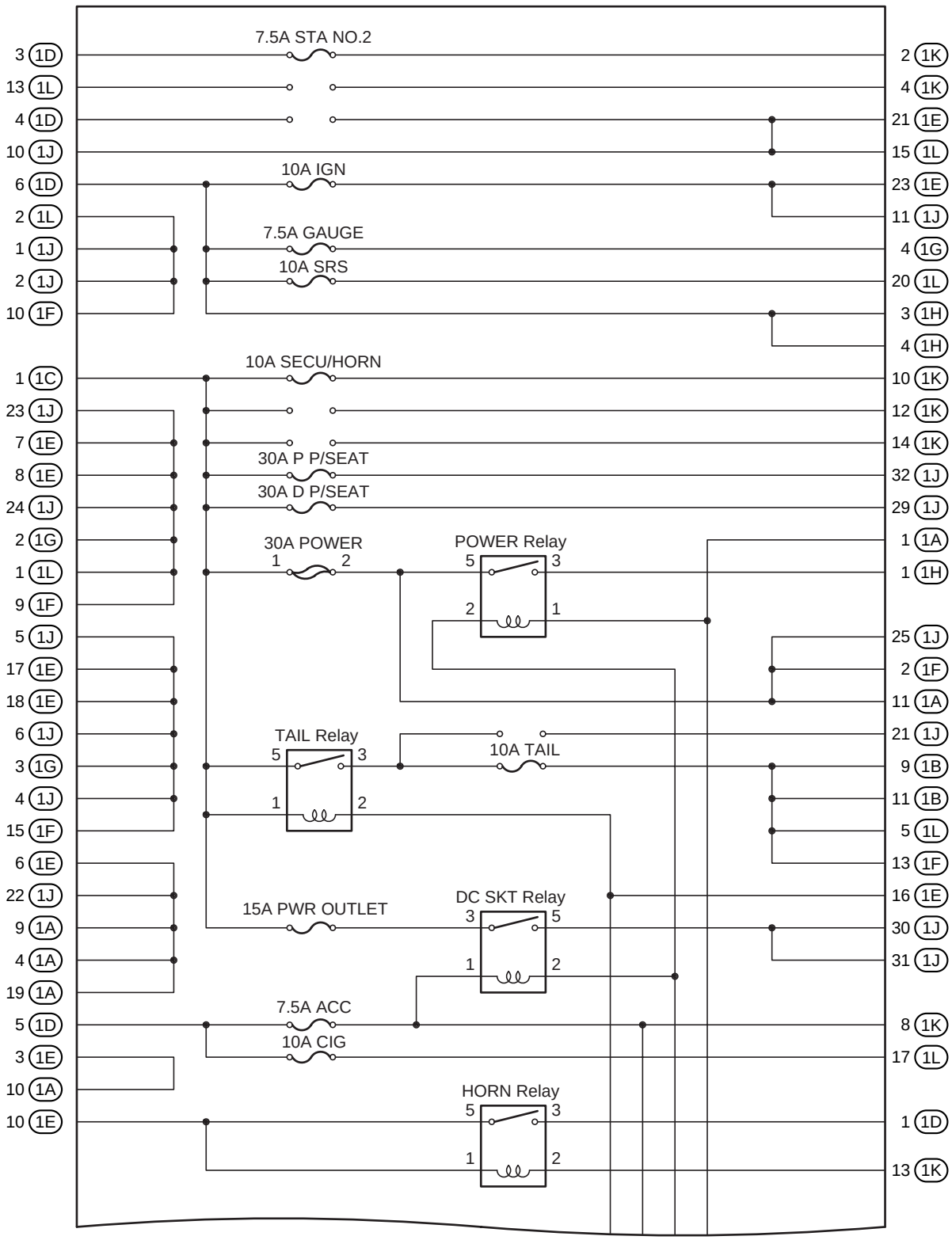

(Cont. Next Page)

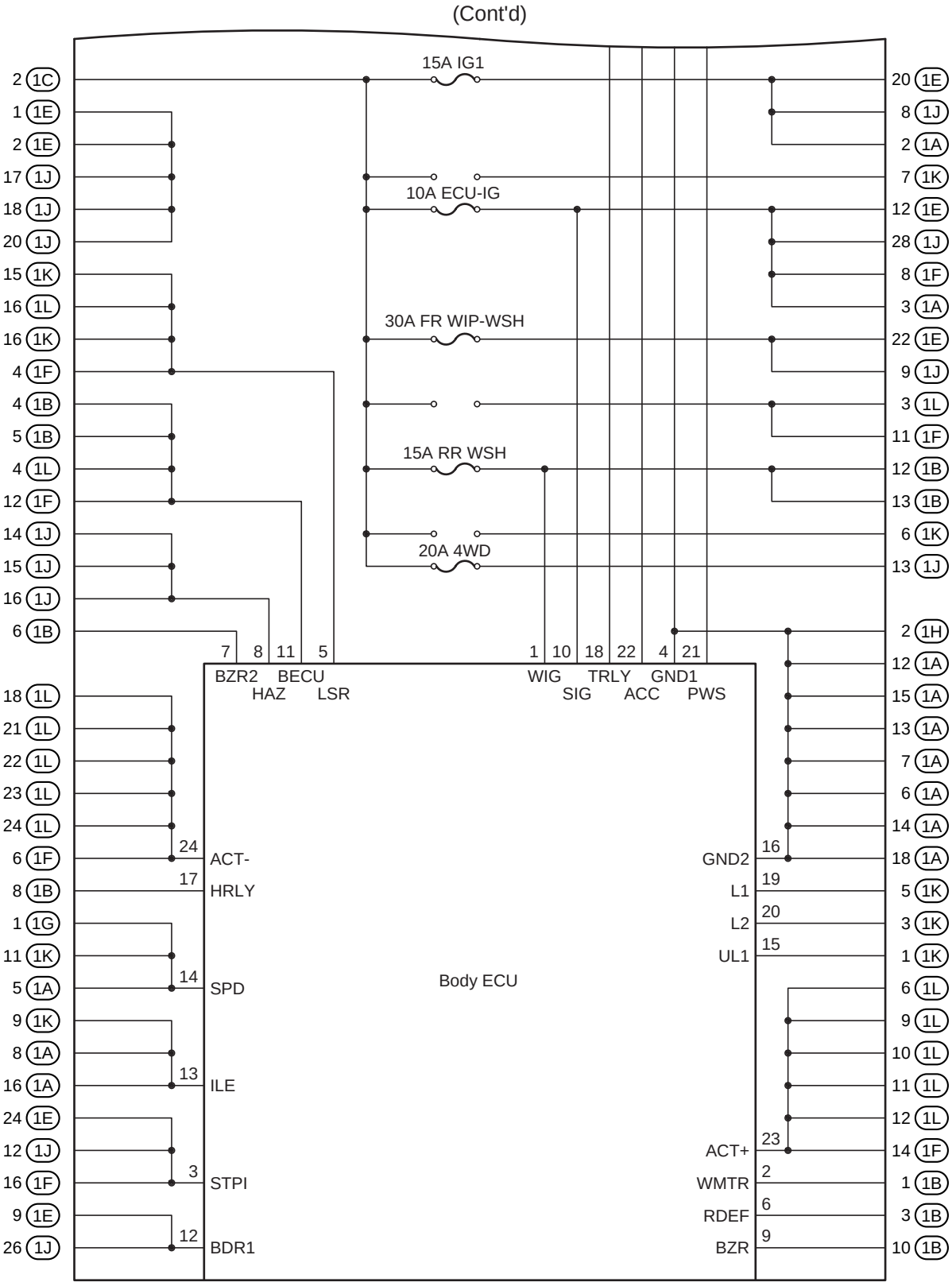
(Cont'd)
15A IG1
10A ECU-IG
30A FR WIP-WSH
15A RR WSH
20A 4WD
2 1C
1 1E
2 1E
17 1J
18 1J
20 1J
15 1K
16 1L
16 1K
4 1F
4 1B
5 1B
4 1L
12 1F
14 1J
15 1J
16 1J
6 1B
20 1E
8 1J
2 1A
7 1K
12 1E
28 1J
8 1F
3 1A
22 1E
9 1J
3 1L
11 1F
12 1B
13 1B
6 1K
13 1J
2 1H
12 1A
15 1A
13 1A
7 1A
6 1A
14 1A
18 1A
5 1K
3 1K
1 1K
6 1L
9 1L
10 1L
11 1L
12 1L
14 1F
1 1B
3 1B
10 1B
7 BZR2
8 BECU
HAZ
11
5 LSR
1 WIG
10 SIG
18 TRLY
22 ACC
4 GND1
21 PWS
18 1L
21 1L
22 1L
23 1L
24 1L
6 1F
8 1B
1 1G
11 1K
5 1A
9 1K
8 1A
16 1A
24 1E
12 1J
16 1F
9 1E
26 1J
24 ACT-
17 HRLY
14 SPD
13 ILE
3 STPI
12 BDR1
Body ECU
16 GND2
19 L1
20 L2
15 UL1
23 ACT+
2 WMTR
6 RDEF
9 BZR

F RELAY LOCATIONS

: Center J/B	Instrument Panel Brace RH (See Page 21)

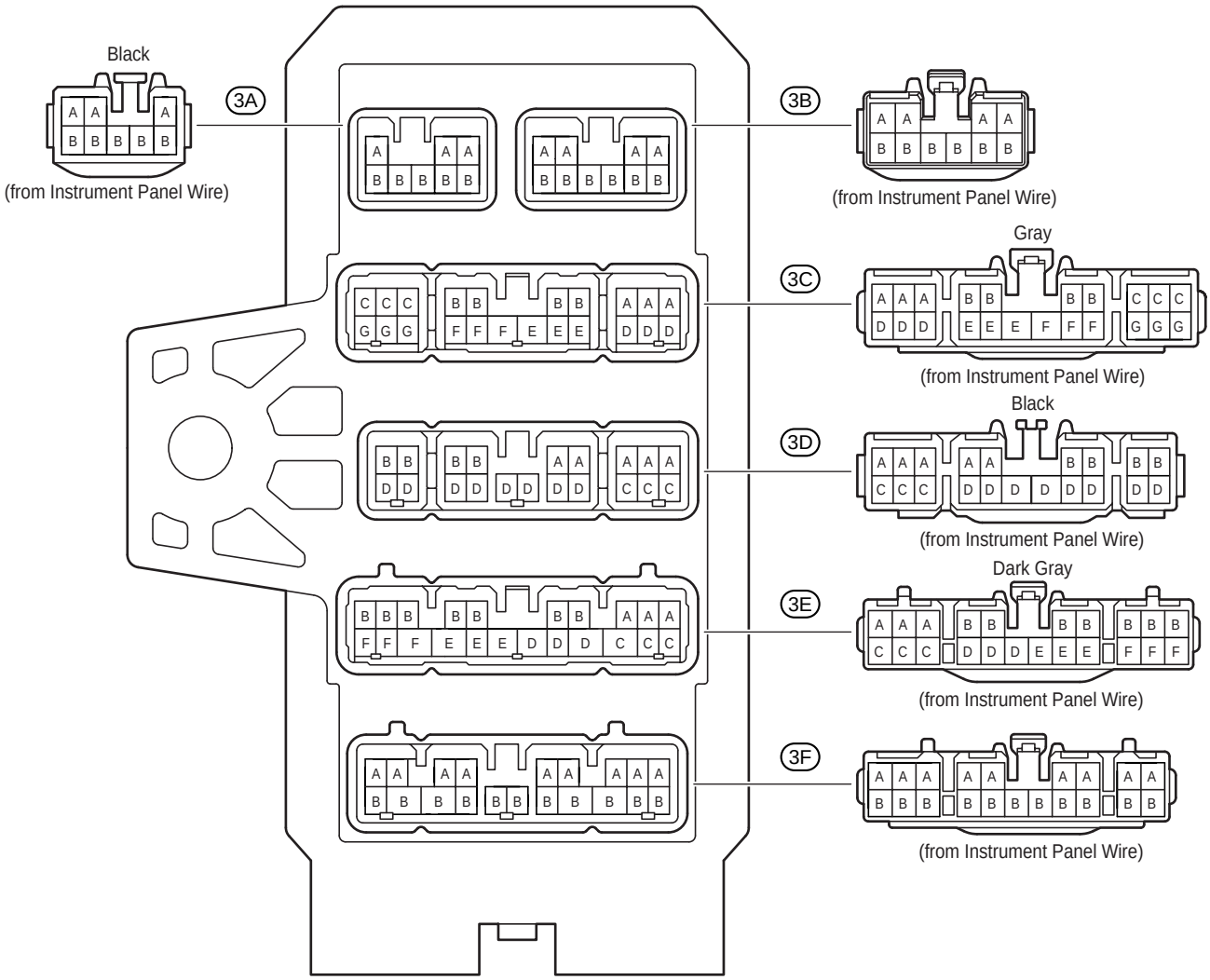

[Center J/B Inner Circuit]

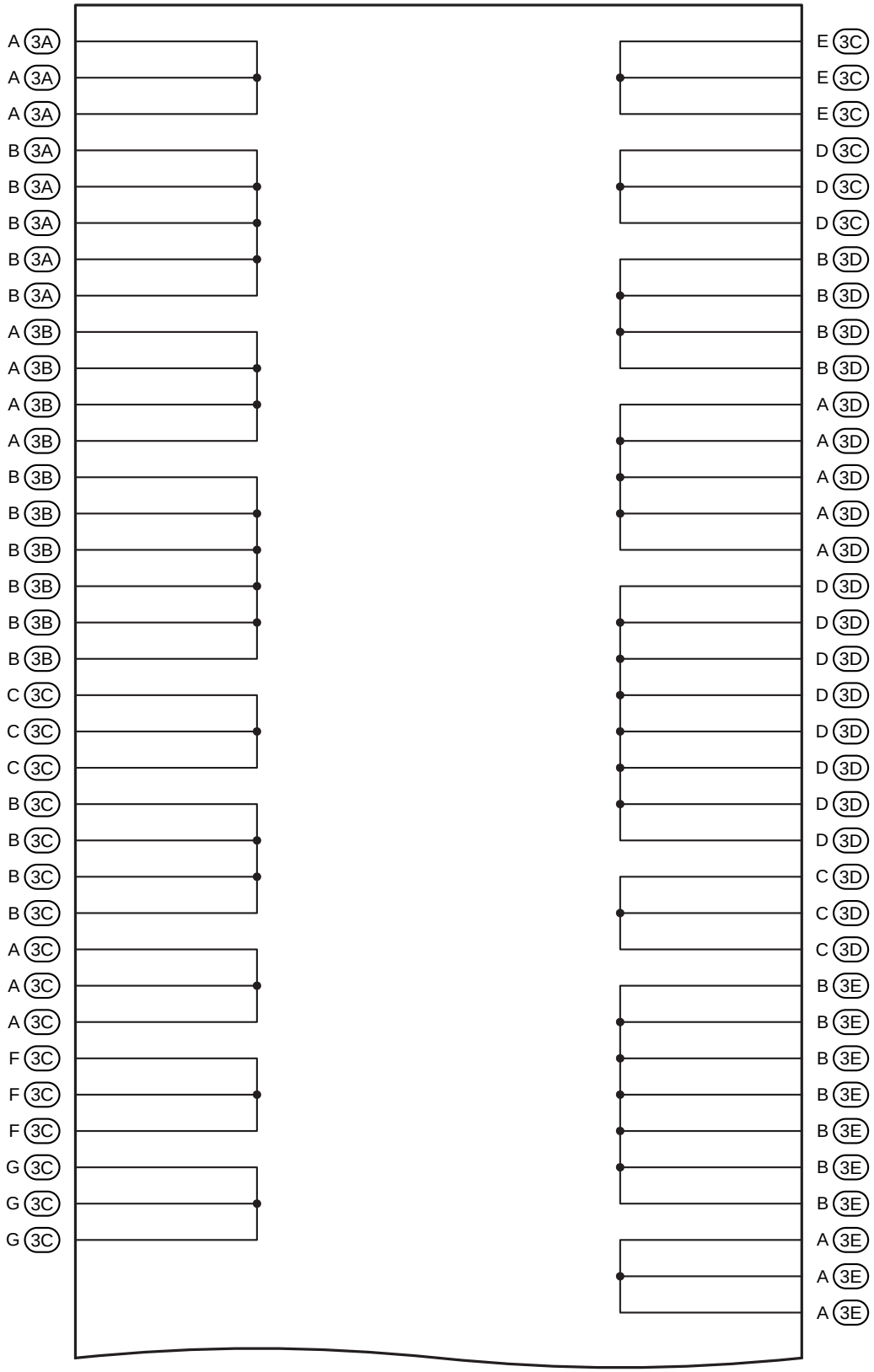

(Cont. Next Page)

(Cont'd)

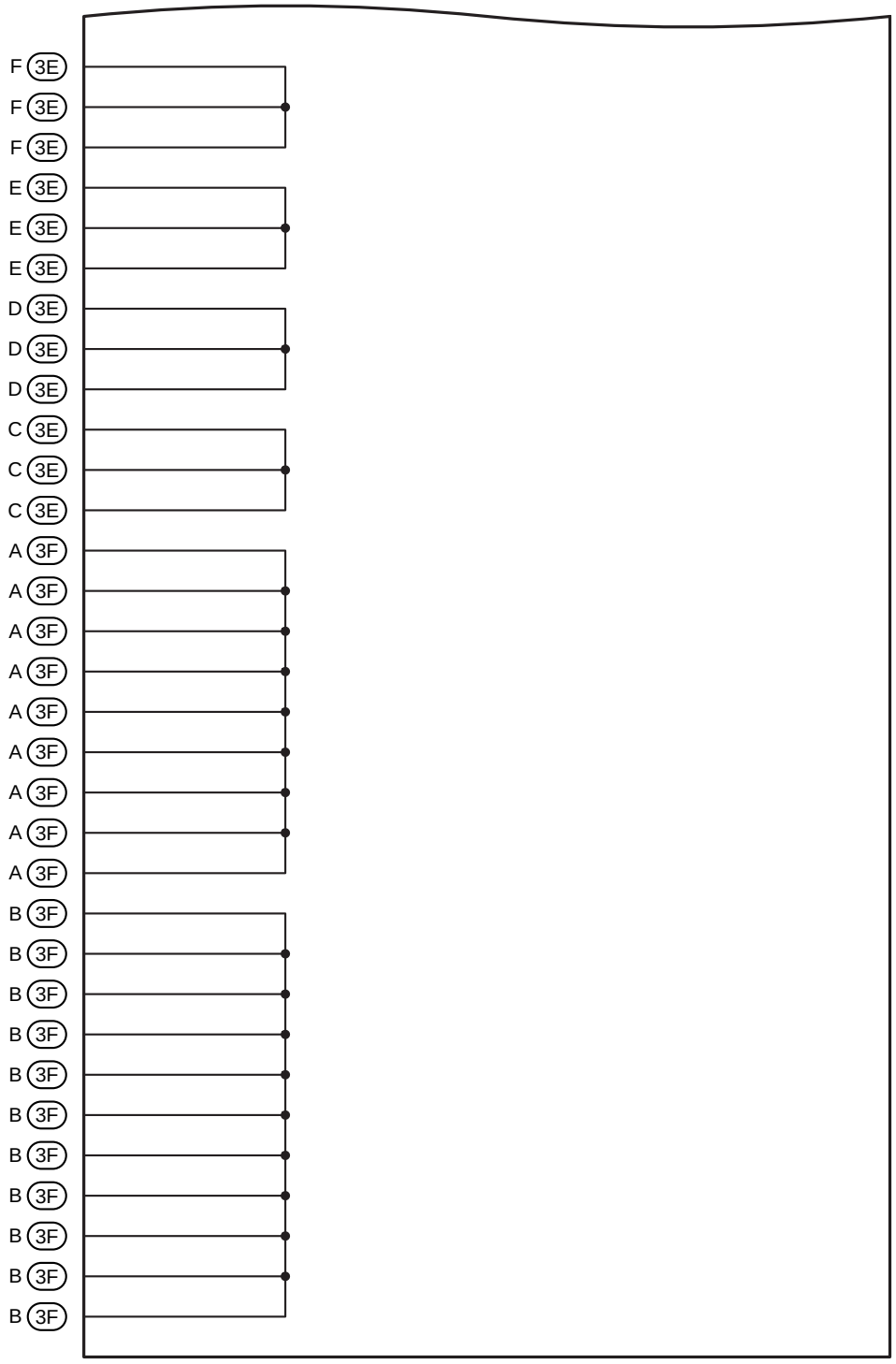
F 3E
F 3E
F 3E
E 3E
E 3E
E 3E
D 3E
D 3E
D 3E
C 3E
C 3E
C 3E
A 3F
A 3F
A 3F
A 3F
A 3F
A 3F
A 3F
A 3F
A 3F
B 3F
B 3F
B 3F
B 3F
B 3F
B 3F
B 3F
B 3F
B 3F
B 3F

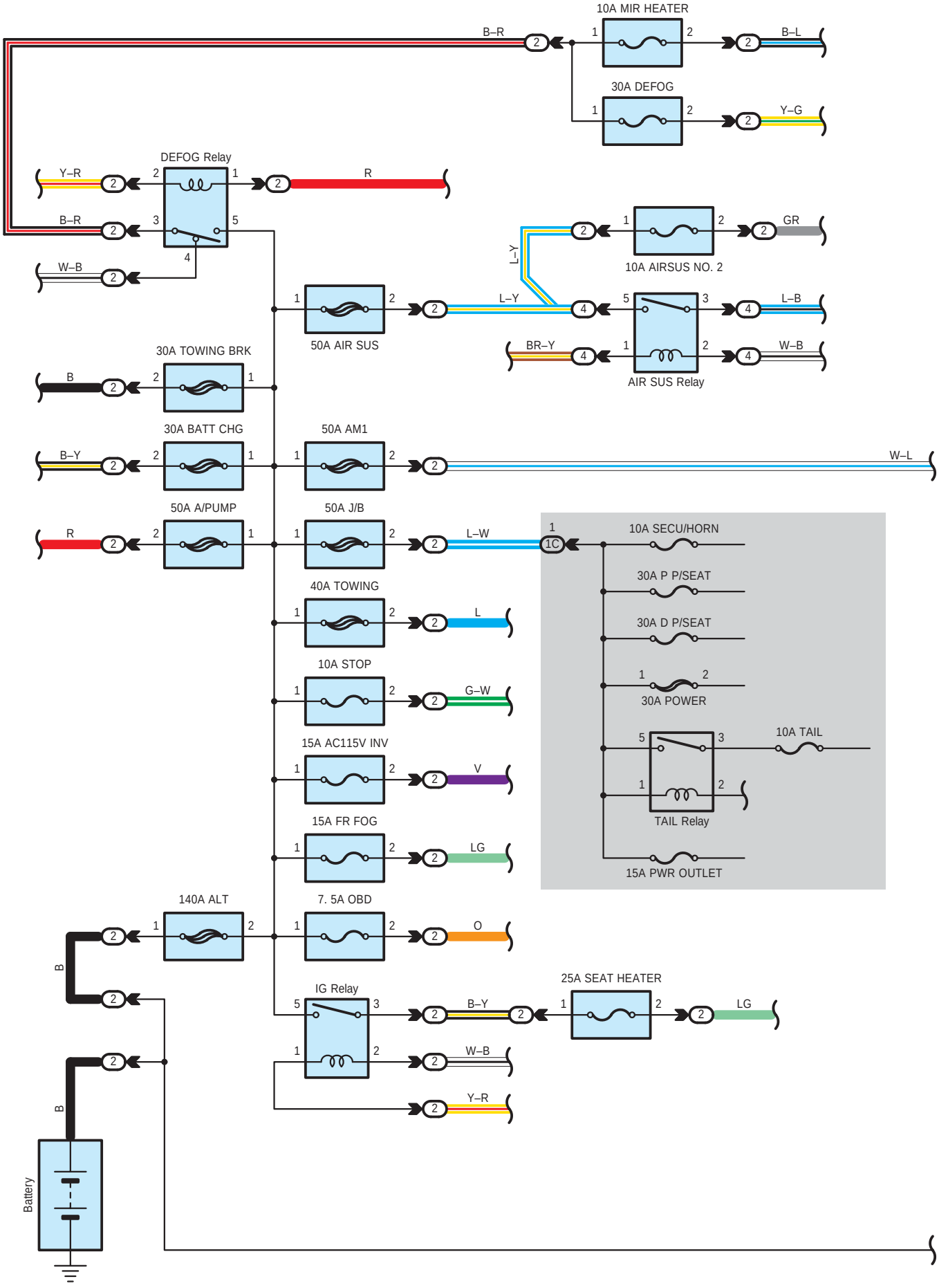
10A MIR HEATER
B–R
B–L
30A DEFOG
Y–G
DEFOG Relay
Y–R
R
B–R
W–B
10A AIRSUS NO. 2
GR
L–Y
50A AIR SUS
L–Y
L–B
BR–Y
W–B
AIR SUS Relay
30A TOWING BRK
B
30A BATT CHG
B–Y
50A AM1
W–L
50A A/PUMP
R
50A J/B
L–W
10A SECU/HORN
30A P P/SEAT
30A D P/SEAT
30A POWER
10A TAIL
TAIL Relay
15A PWR OUTLET
40A TOWING
L
10A STOP
G–W
15A AC115V INV
V
15A FR FOG
LG
140A ALT
7. 5A OBD
O
IG Relay
25A SEAT HEATER
B–Y
LG
W–B
Y–R
B
B
Battery

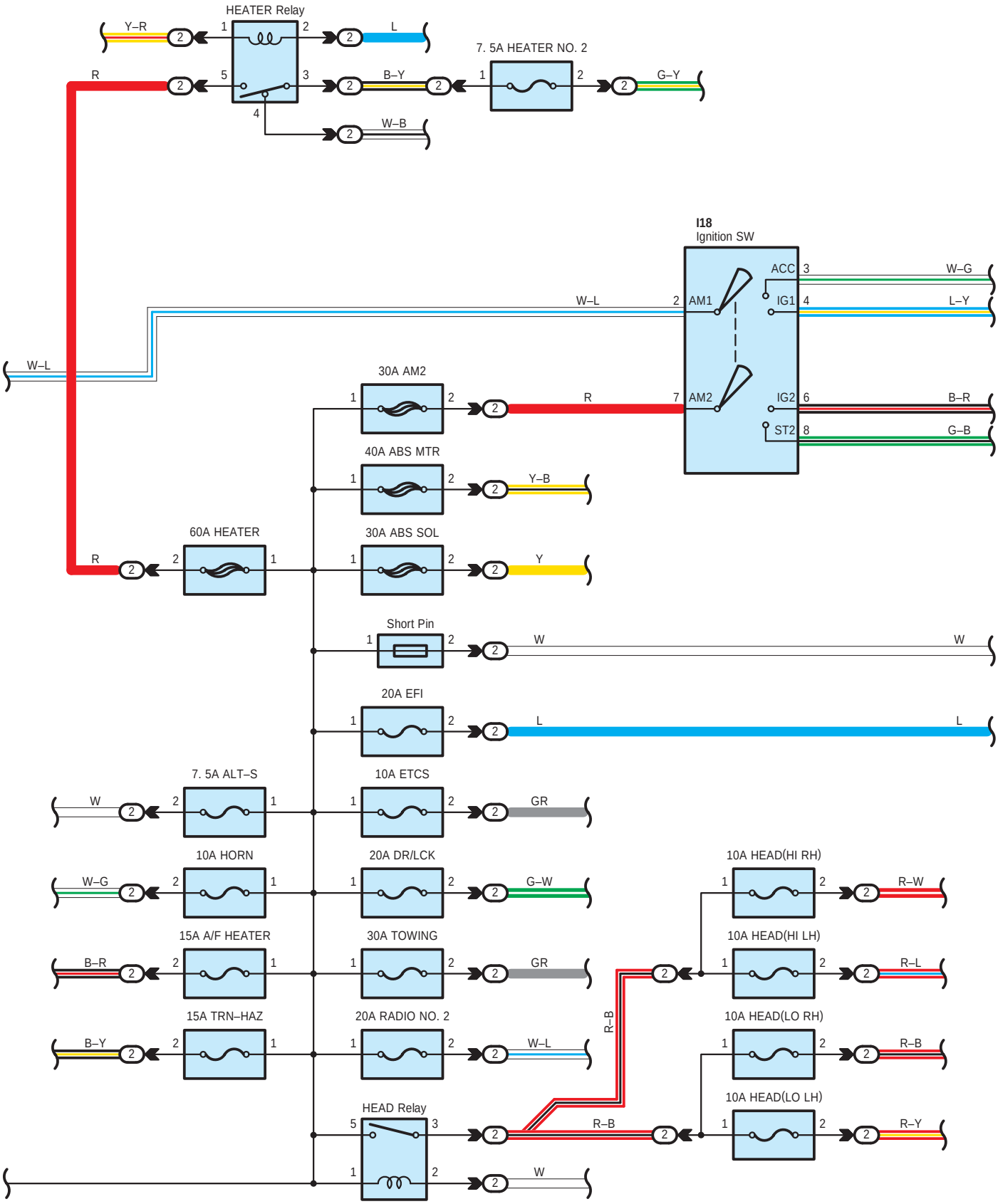
HEATER Relay
Y–R
L
R
B–Y
W–B
7. 5A HEATER NO. 2
G–Y
I18
Ignition SW
ACC
IG1
IG2
ST2
AM1
AM2
W–G
L–Y
B–R
G–B
W–L
30A AM2
40A ABS MTR
Y–B
60A HEATER
30A ABS SOL
Y
Short Pin
W
20A EFI
L
7. 5A ALT–S
10A ETCS
GR
10A HORN
20A DR/LCK
G–W
15A A/F HEATER
30A TOWING
15A TRN–HAZ
20A RADIO NO. 2
HEAD Relay
R–B
10A HEAD(HI RH)
R–W
10A HEAD(HI LH)
R–L
10A HEAD(LO RH)
10A HEAD(LO LH)
R–Y

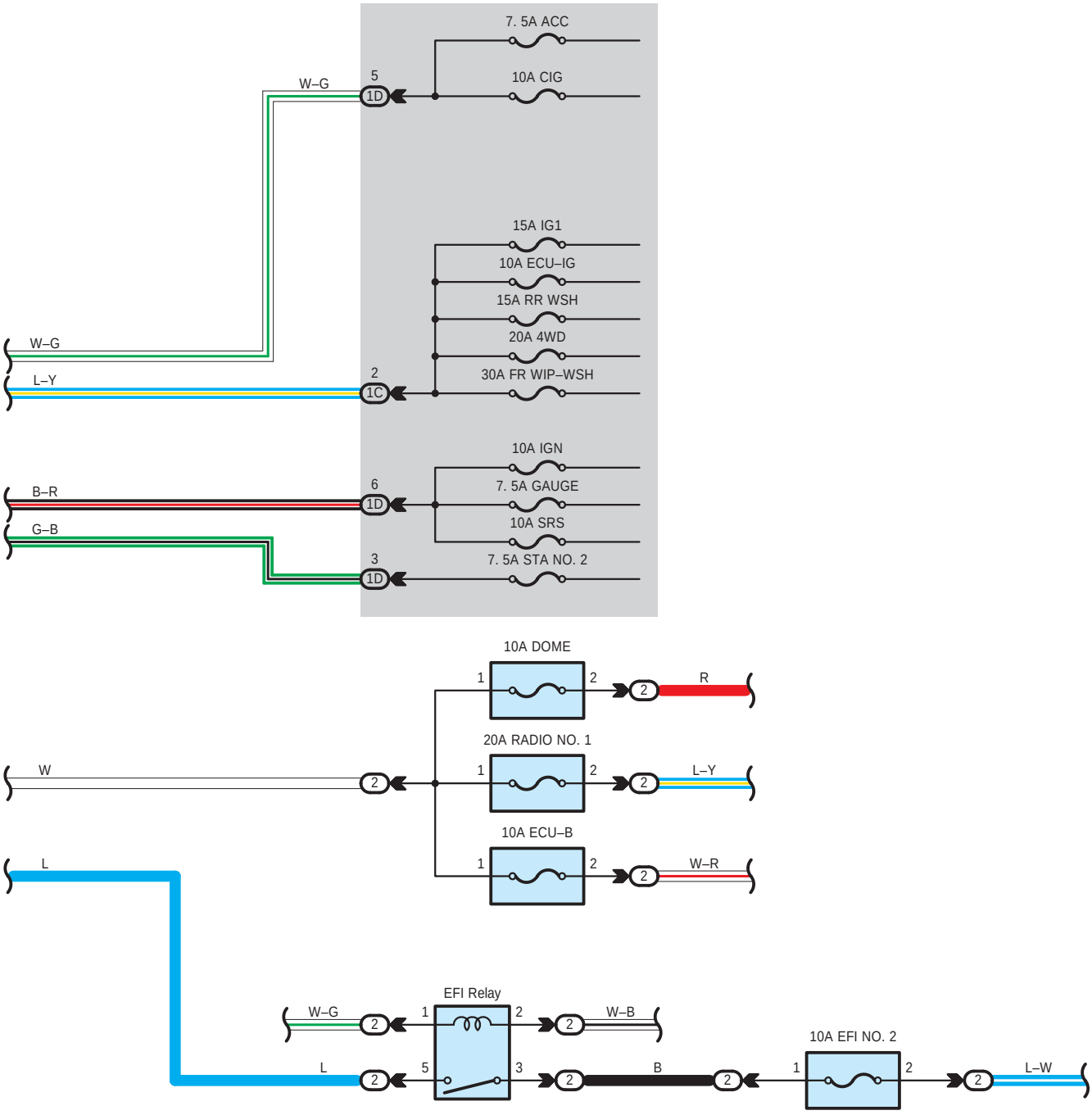
7. 5A ACC
10A CIG
W–G
5
1D
15A IG1
10A ECU–IG
15A RR WSH
20A 4WD
30A FR WIP–WSH
W–G
L–Y
2
1C
10A IGN
7. 5A GAUGE
10A SRS
7. 5A STA NO. 2
B–R
G–B
6
3
1D
10A DOME
20A RADIO NO. 1
10A ECU–B
R
L–Y
W–R
W
L
EFI Relay
W–G
W–B
L
B
10A EFI NO. 2
L–W

○ : Parts Location

Code	See Page	Code	See Page	Code	See Page
I18	37				

⬭ : Relay Blocks

Code	See Page	Relay Blocks (Relay Block Location)
2	22	Engine Room R/B (Engine Compartment Left)
4	23	Engine Room R/B No.4 (Engine Compartment Left)

⬭ : Junction Block and Wire Harness Connector

Code	See Page	Junction Block and Wire Harness (Connector Location)
1C	24	Engine Room Main Wire and Driver Side J/B (Lower Finish Panel)
1D		

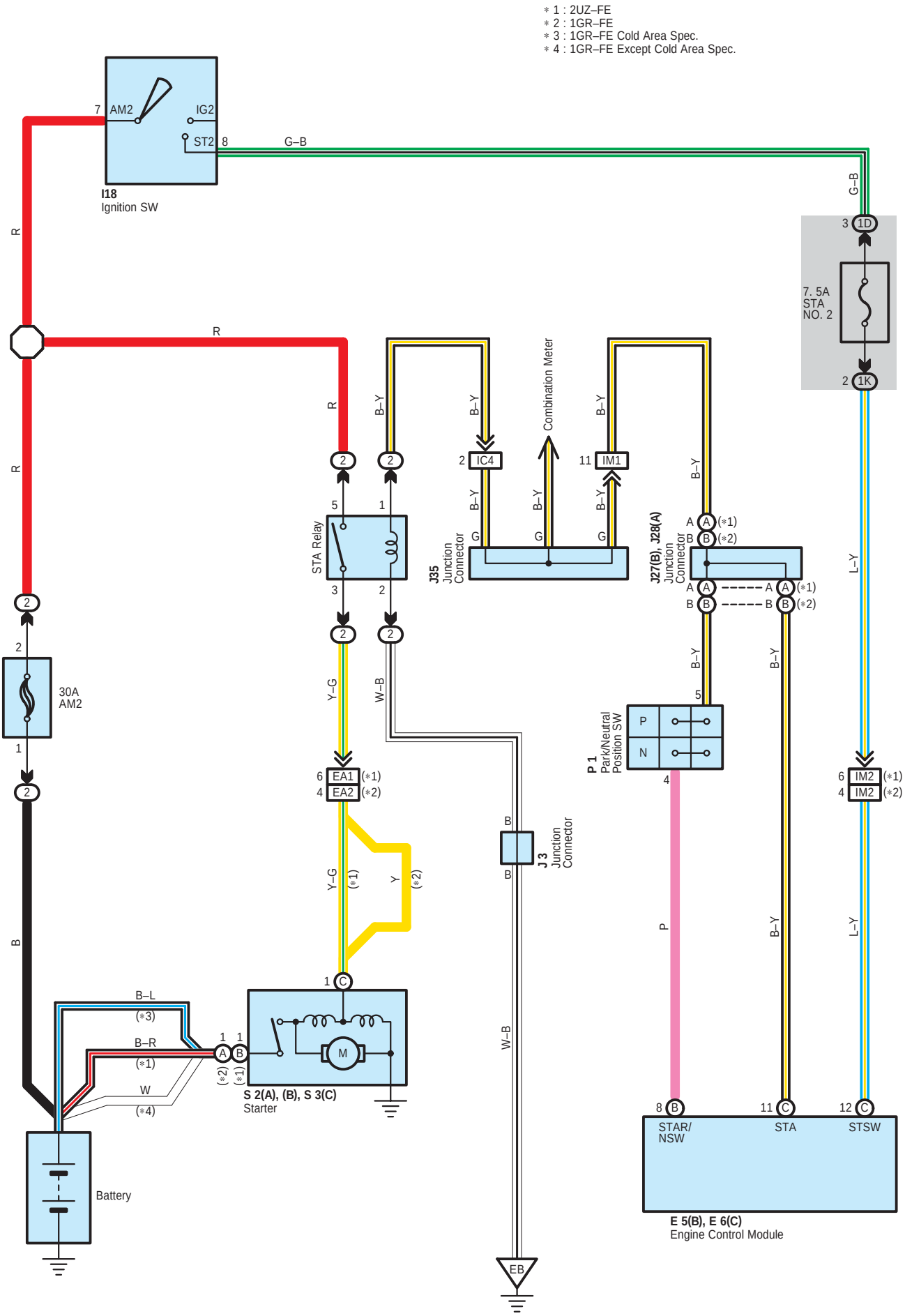
* 1 : 2UZ–FE
* 2 : 1GR–FE
* 3 : 1GR–FE Cold Area Spec.
* 4 : 1GR–FE Except Cold Area Spec.
I18
Ignition SW
7 AM2
IG2
ST2 8
G–B
R
3 1D
7. 5A
STA
NO. 2
2 1K
30A
AM2
STA Relay
J35
Junction
Connector
2 IC4
Combination Meter
11 IM1
J27(B), J28(A)
Junction
Connector
P 1
Park/Neutral
Position SW
P
N
6 EA1 (*1)
4 EA2 (*2)
Y–G
W–B
B–Y
L–Y
P
B
B–L
(*3)
B–R
(*1)
W
(*4)
S 2(A), (B), S 3(C)
Starter
M
J3
Junction
Connector
Battery
EB
6 IM2 (*1)
4 IM2 (*2)
8 B STAR/ NSW
11 C STA
12 C STSW
E 5(B), E 6(C)
Engine Control Module

: Parts Location

Code		See Page	Code		See Page	Code		See Page
E5	B	37	J27	B	38	S2	A	35 (1GR–FE)
E6	C	37	J28	A	38		B	33 (2UZ–FE)
I18		37	J35		38	S3	C	33 (2UZ–FE)
J3		33 (2UZ–FE)	P1		33 (2UZ–FE)			35 (1GR–FE)
		35 (1GR–FE)			35 (1GR–FE)			

: Relay Blocks

Code	See Page	Relay Blocks (Relay Block Location)
2	22	Engine Room R/B (Engine Compartment Left)

: Junction Block and Wire Harness Connector

Code	See Page	Junction Block and Wire Harness (Connector Location)
1D	24	Engine Room Main Wire and Driver Side J/B (Lower Finish Panel)
1K	25	Instrument Panel Wire and Driver Side J/B (Lower Finish Panel)

: Connector Joining Wire Harness and Wire Harness

Code	See Page	Joining Wire Harness and Wire Harness (Connector Location)
EA1	44 (2UZ–FE)	Engine No.2 Wire and Engine Room Main Wire (Under the Engine Room R/B)
EA2	45 (1GR–FE)	
IC4	46	Instrument Panel Wire and Engine Room Main Wire (Left Kick Panel)
IM1	47	Engine Wire and Instrument Panel Wire (Right Side of Blower Unit)
IM2		

: Ground Points

Code	See Page	Ground Points Location
EB	44 (2UZ–FE)	Front Left Fender
	45 (1GR–FE)	

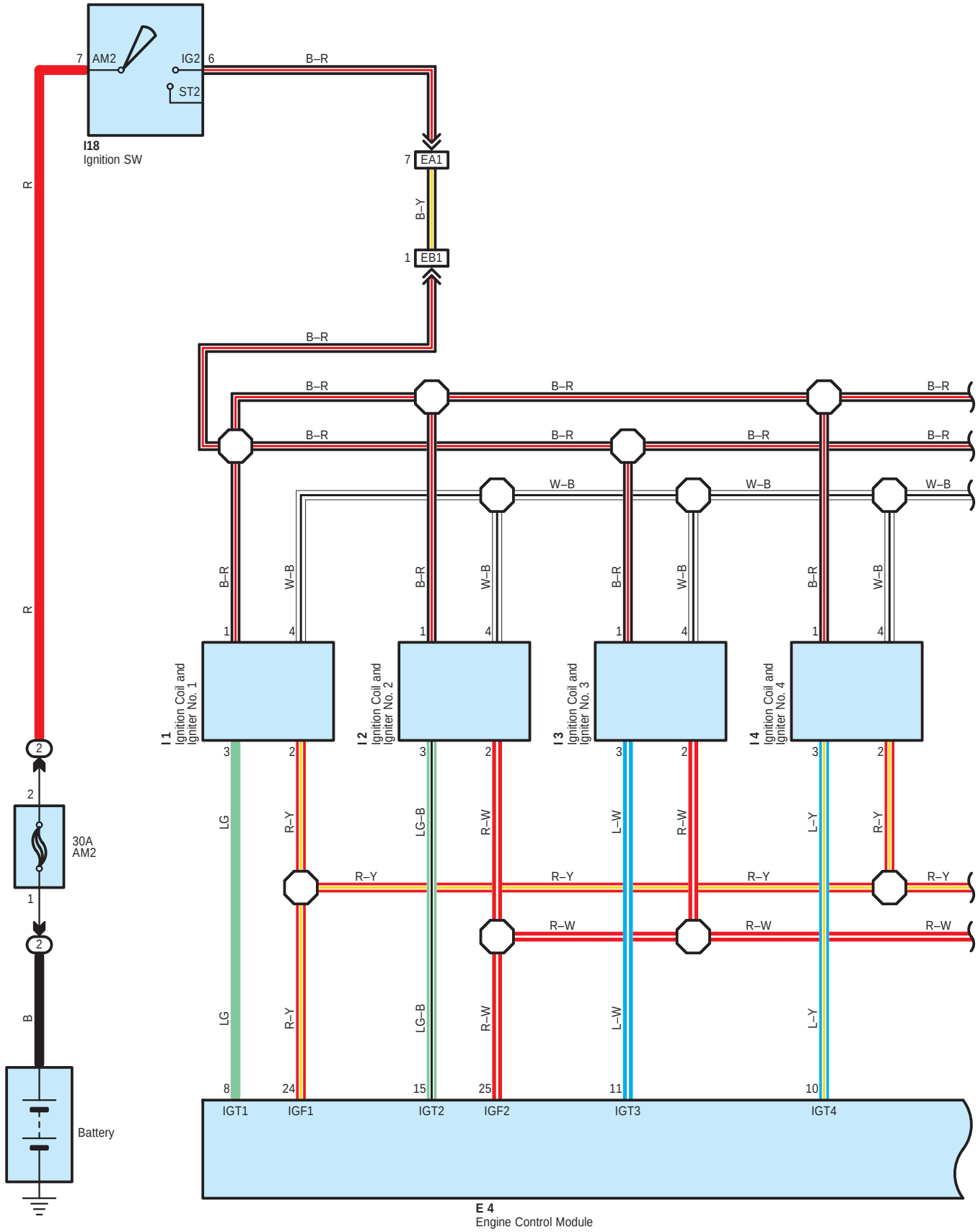
7 AM2
IG2 6
ST2
I18
Ignition SW
B–R
7 EA1
B–Y
1 EB1
R
2
30A
AM2
1
B
Battery
W–B
B–R
I 1
Ignition Coil and
Igniter No. 1
I 2
Ignition Coil and
Igniter No. 2
I 3
Ignition Coil and
Igniter No. 3
I 4
Ignition Coil and
Igniter No. 4
LG
R–Y
LG–B
R–W
L–W
L–Y
IGT1
IGF1
IGT2
IGF2
IGT3
IGT4
E 4
Engine Control Module

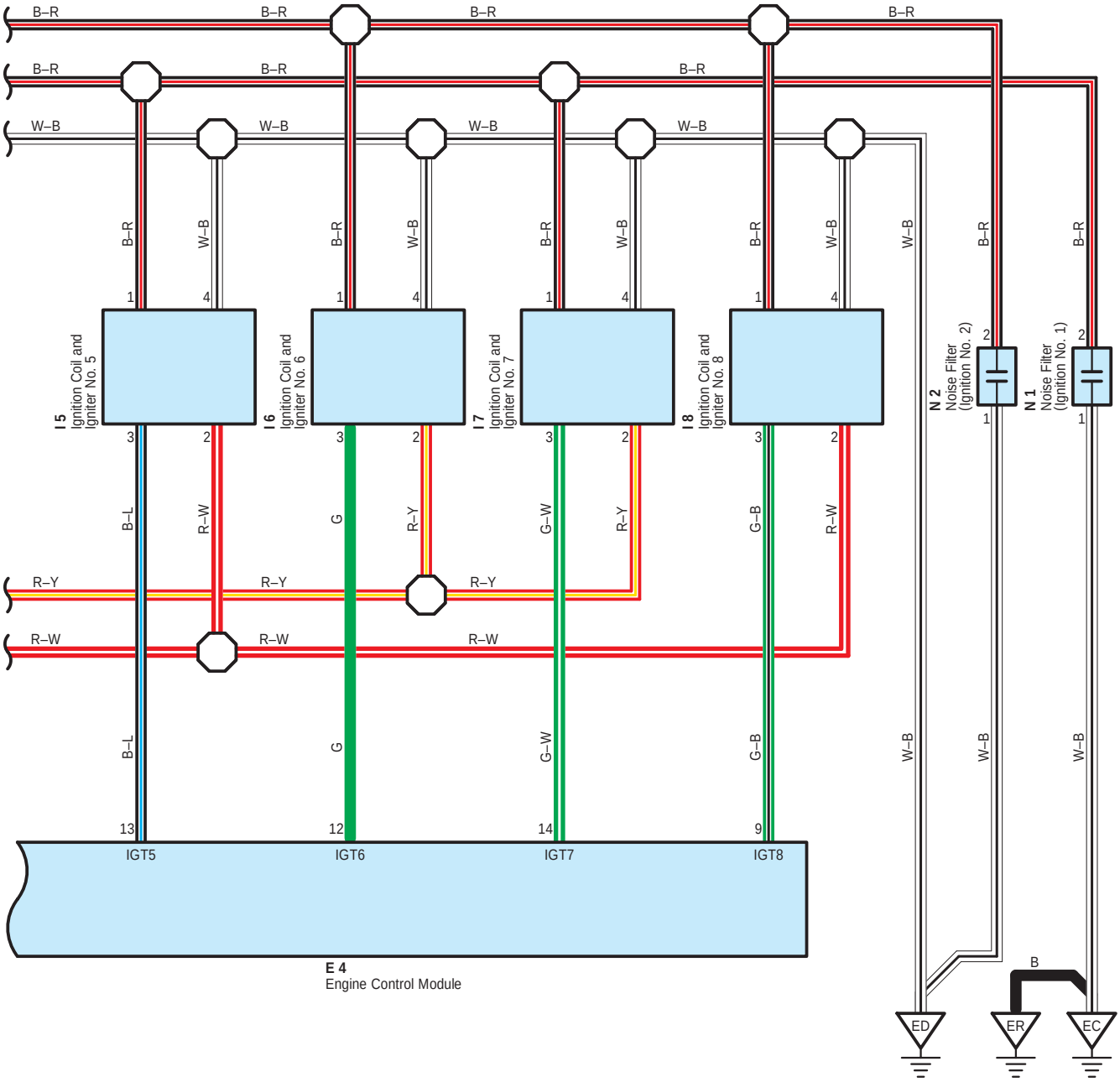
B–R
W–B
R–Y
R–W
B–L
G
G–W
G–B
I 5
Ignition Coil and Igniter No. 5
I 6
Ignition Coil and Igniter No. 6
I 7
Ignition Coil and Igniter No. 7
I 8
Ignition Coil and Igniter No. 8
N 2
Noise Filter (Ignition No. 2)
N 1
Noise Filter (Ignition No. 1)
IGT5
IGT6
IGT7
IGT8
E 4
Engine Control Module
B
ED
ER
EC

Ignition for 2UZ–FE

: Parts Location

Code	See Page	Code	See Page	Code	See Page
E4	37	I4	33 (2UZ–FE)	I8	33 (2UZ–FE)
I1	33 (2UZ–FE)	I5	33 (2UZ–FE)	I18	37
I2	33 (2UZ–FE)	I6	33 (2UZ–FE)	N1	33 (2UZ–FE)
I3	33 (2UZ–FE)	I7	33 (2UZ–FE)	N2	33 (2UZ–FE)

: Relay Blocks

Code	See Page	Relay Blocks (Relay Block Location)
2	22	Engine Room R/B (Engine Compartment Left)

: Connector Joining Wire Harness and Wire Harness

Code	See Page	Joining Wire Harness and Wire Harness (Connector Location)
EA1	44 (2UZ–FE)	Engine No.2 Wire and Engine Room Main Wire (Under the Engine Room R/B)
EB1	44 (2UZ–FE)	Engine No.2 Wire and Engine Wire (Near the Starter)

: Ground Points

Code	See Page	Ground Points Location
EC	44 (2UZ–FE)	Right Bank Cylinder Head
ED	44 (2UZ–FE)	Left Bank Cylinder Head
ER	44 (2UZ–FE)	Rear Side of Front Right Fender

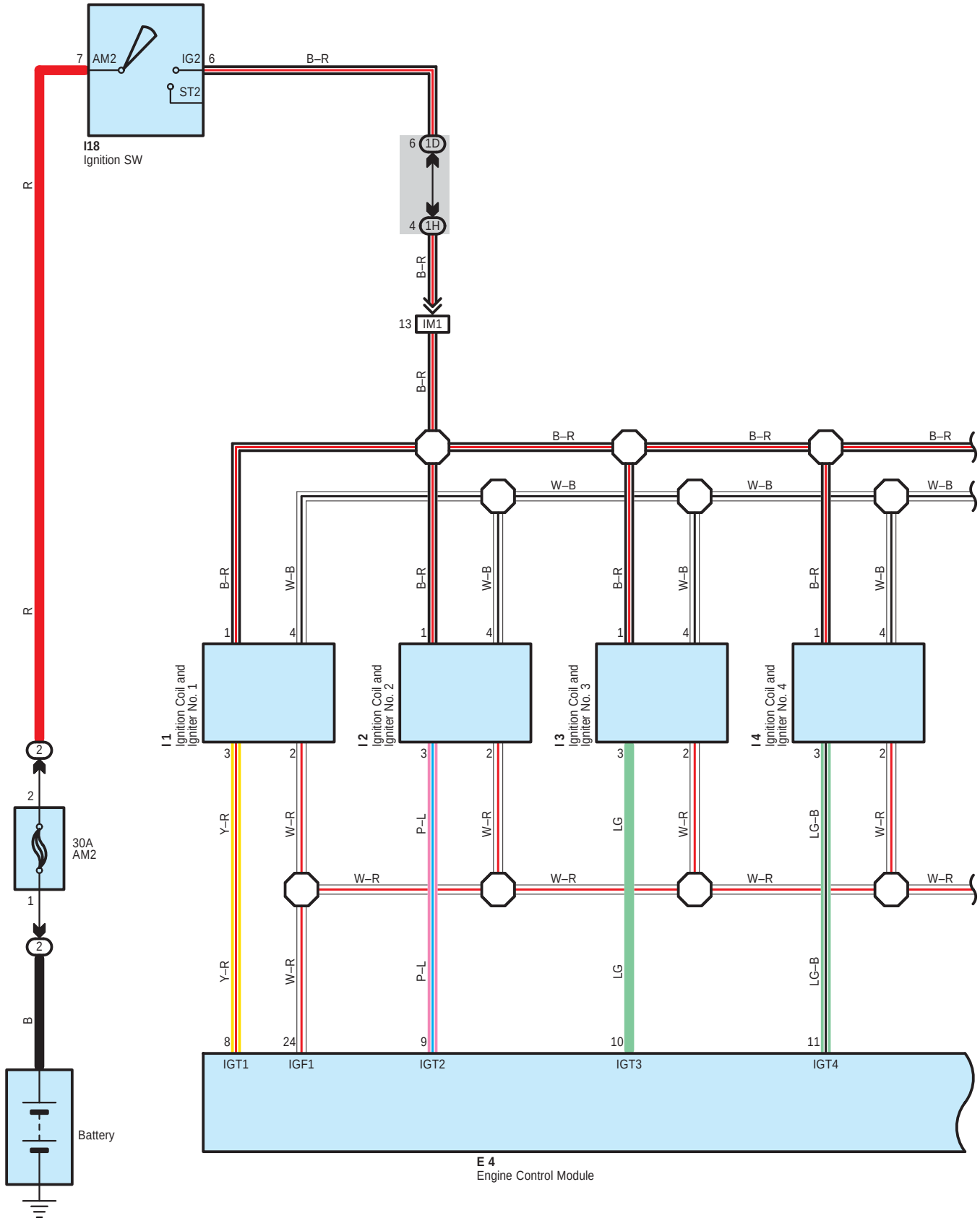
7 AM2
IG2 6
ST2
I18
Ignition SW
B–R
6 1D
4 1H
13 IM1
R
R
2
2
30A
AM2
1
2
B
Battery
I 1
Ignition Coil and
Igniter No. 1
I 2
Ignition Coil and
Igniter No. 2
I 3
Ignition Coil and
Igniter No. 3
I 4
Ignition Coil and
Igniter No. 4
W–B
W–R
Y–R
P–L
LG
LG–B
IGT1
IGF1
IGT2
IGT3
IGT4
E 4
Engine Control Module

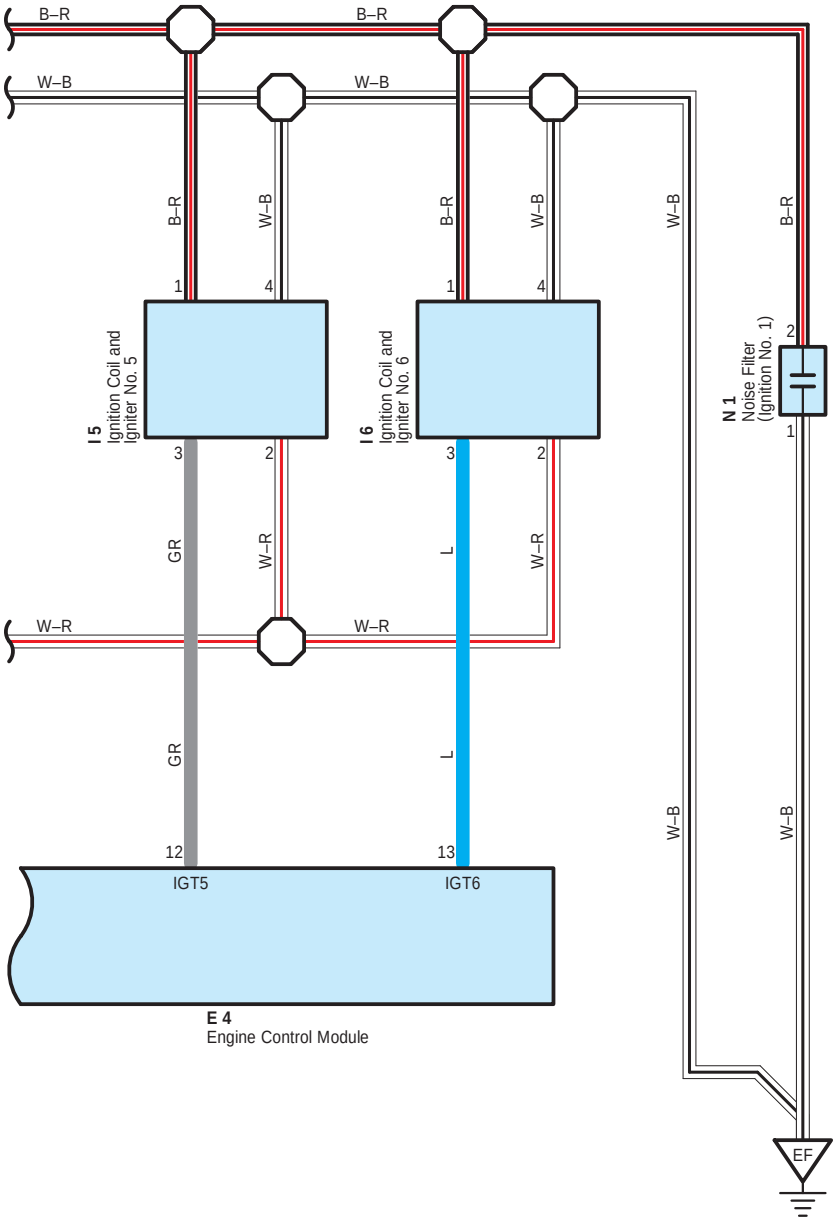
B–R
B–R
W–B
W–B
B–R
W–B
1
4
I 5
Ignition Coil and
Igniter No. 5
3
2
GR
W–R
W–R
W–R
GR
12
IGT5
E 4
Engine Control Module
B–R
W–B
1
4
I 6
Ignition Coil and
Igniter No. 6
3
2
L
W–R
L
13
IGT6
W–B
W–B
B–R
2
N 1
Noise Filter
(Ignition No. 1)
1
W–B
EF

Ignition for 1GR–FE

: Parts Location

Code	See Page	Code	See Page	Code	See Page
E4	37	I3	35 (1GR–FE)	I6	35 (1GR–FE)
I1	35 (1GR–FE)	I4	35 (1GR–FE)	I18	37
I2	35 (1GR–FE)	I5	35 (1GR–FE)	N1	35 (1GR–FE)

: Relay Blocks

Code	See Page	Relay Blocks (Relay Block Location)
2	22	Engine Room R/B (Engine Compartment Left)

: Junction Block and Wire Harness Connector

Code	See Page	Junction Block and Wire Harness (Connector Location)
1D	24	Engine Room Main Wire and Driver Side J/B (Lower Finish Panel)
1H	25	Instrument Panel Wire and Driver Side J/B (Lower Finish Panel)

: Connector Joining Wire Harness and Wire Harness

Code	See Page	Joining Wire Harness and Wire Harness (Connector Location)
IM1	47	Engine Wire and Instrument Panel Wire (Right Side of Blower Unit)

: Ground Points

Code	See Page	Ground Points Location
EF	45 (1GR–FE)	Rear Side of Left Bank Cylinder Block

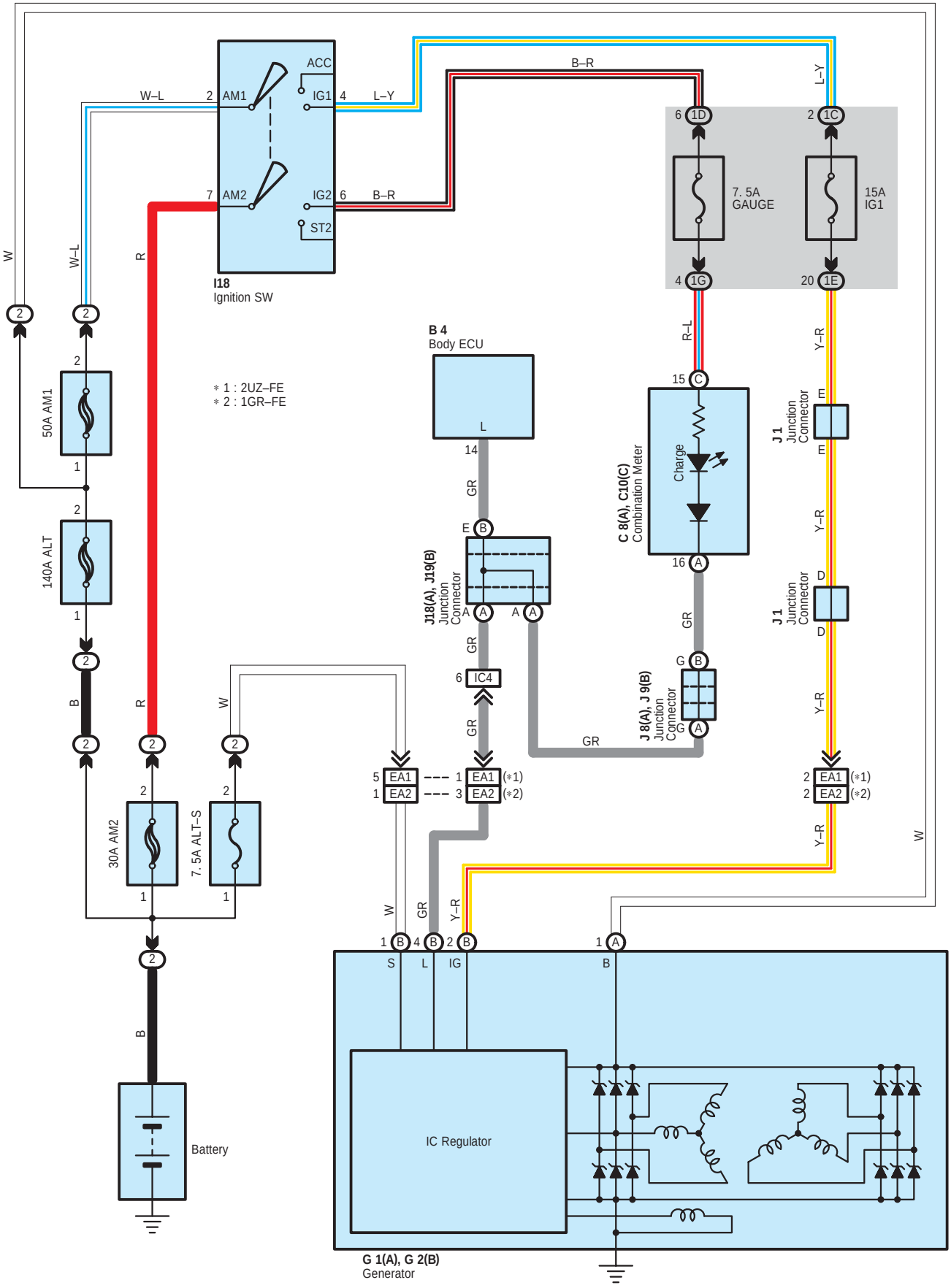
I18
Ignition SW
ACC
IG1
IG2
ST2
AM1
AM2
W–L
L–Y
B–R
R
W
B
B 4
Body ECU
* 1 : 2UZ–FE
* 2 : 1GR–FE
50A AM1
140A ALT
30A AM2
7. 5A ALT–S
7. 5A GAUGE
15A IG1
C 8(A), C10(C)
Combination Meter
Charge
J1
Junction Connector
J18(A), J19(B)
Junction Connector
J 8(A), J 9(B)
Junction Connector
IC4
EA1
EA2
(*1)
(*2)
Battery
IC Regulator
G 1(A), G 2(B)
Generator
S
L
IG
B
GR
Y–R
R–L

: Parts Location

Code		See Page	Code		See Page	Code		See Page
B4		36	G2	B	32 (2UZ–FE)	J8	A	38
C8	A	37			34 (1GR–FE)	J9	B	38
C10	C	37	I18		37	J18	A	38
G1	A	32 (2UZ–FE)	J1		33 (2UZ–FE)	J19	B	38
		34 (1GR–FE)			35 (1GR–FE)			

: Relay Blocks

Code	See Page	Relay Blocks (Relay Block Location)
2	22	Engine Room R/B (Engine Compartment Left)

: Junction Block and Wire Harness Connector

Code	See Page	Junction Block and Wire Harness (Connector Location)
1C	24	Engine Room Main Wire and Driver Side J/B (Lower Finish Panel)
1D		
1E		
1G	25	Instrument Panel Wire and Driver Side J/B (Lower Finish Panel)

: Connector Joining Wire Harness and Wire Harness

Code	See Page	Joining Wire Harness and Wire Harness (Connector Location)
EA1	44 (2UZ–FE)	Engine No.2 Wire and Engine Room Main Wire (Under the Engine Room R/B)
EA2	45 (1GR–FE)	
IC4	46	Instrument Panel Wire and Engine Room Main Wire (Left Kick Panel)

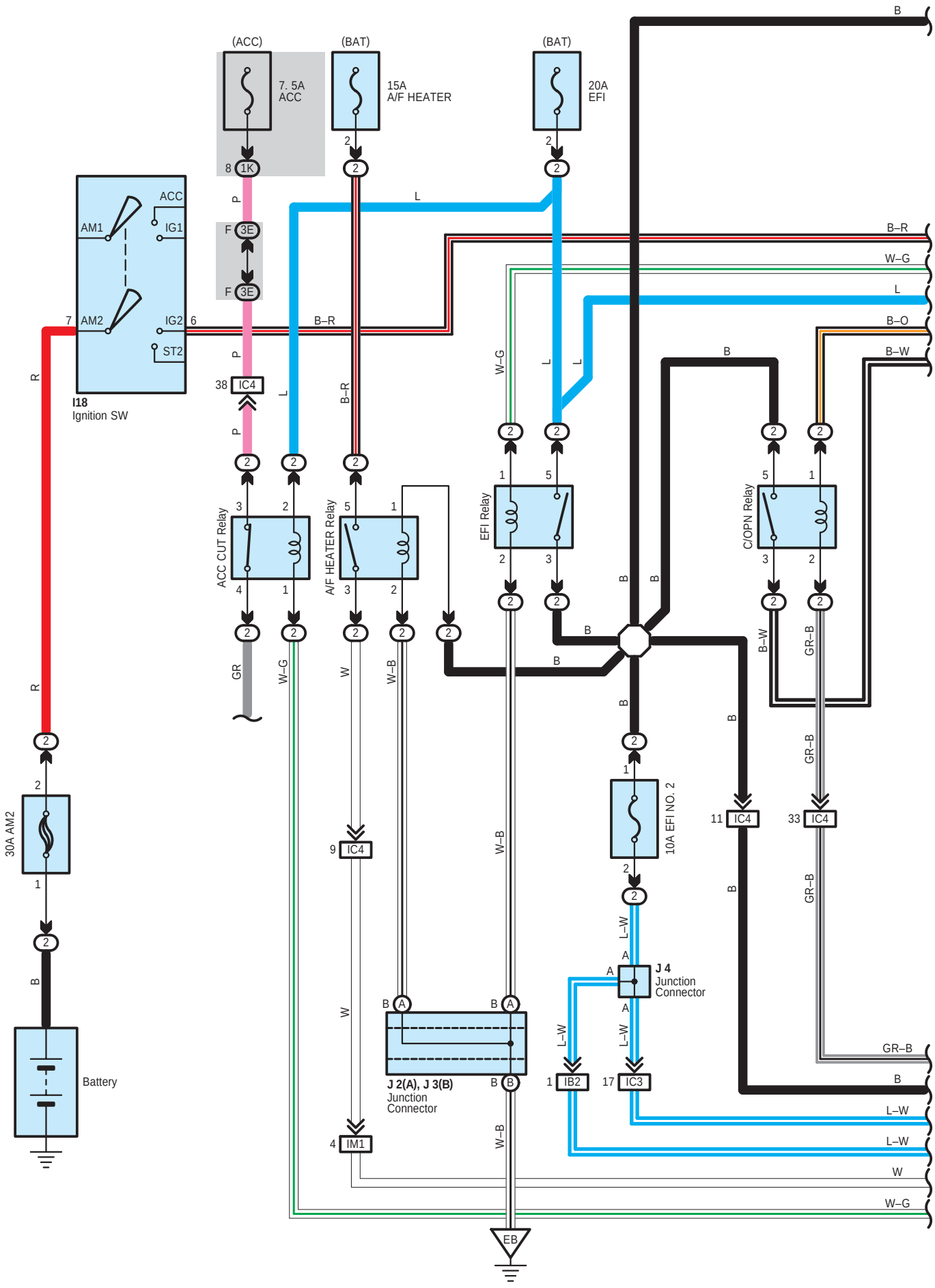
(ACC)
(BAT)
(BAT)
7. 5A
ACC
15A
A/F HEATER
20A
EFI
ACC
AM1
IG1
AM2
IG2
ST2
I18
Ignition SW
ACC CUT Relay
A/F HEATER Relay
EFI Relay
C/OPN Relay
10A EFI NO. 2
30A AM2
Battery
J 2(A), J 3(B)
Junction
Connector
J 4
Junction
Connector
IC4
IM1
IB2
IC3
EB
B
B–R
W–G
L
B–O
B–W
R
P
GR
W
W–B
L–W
GR–B

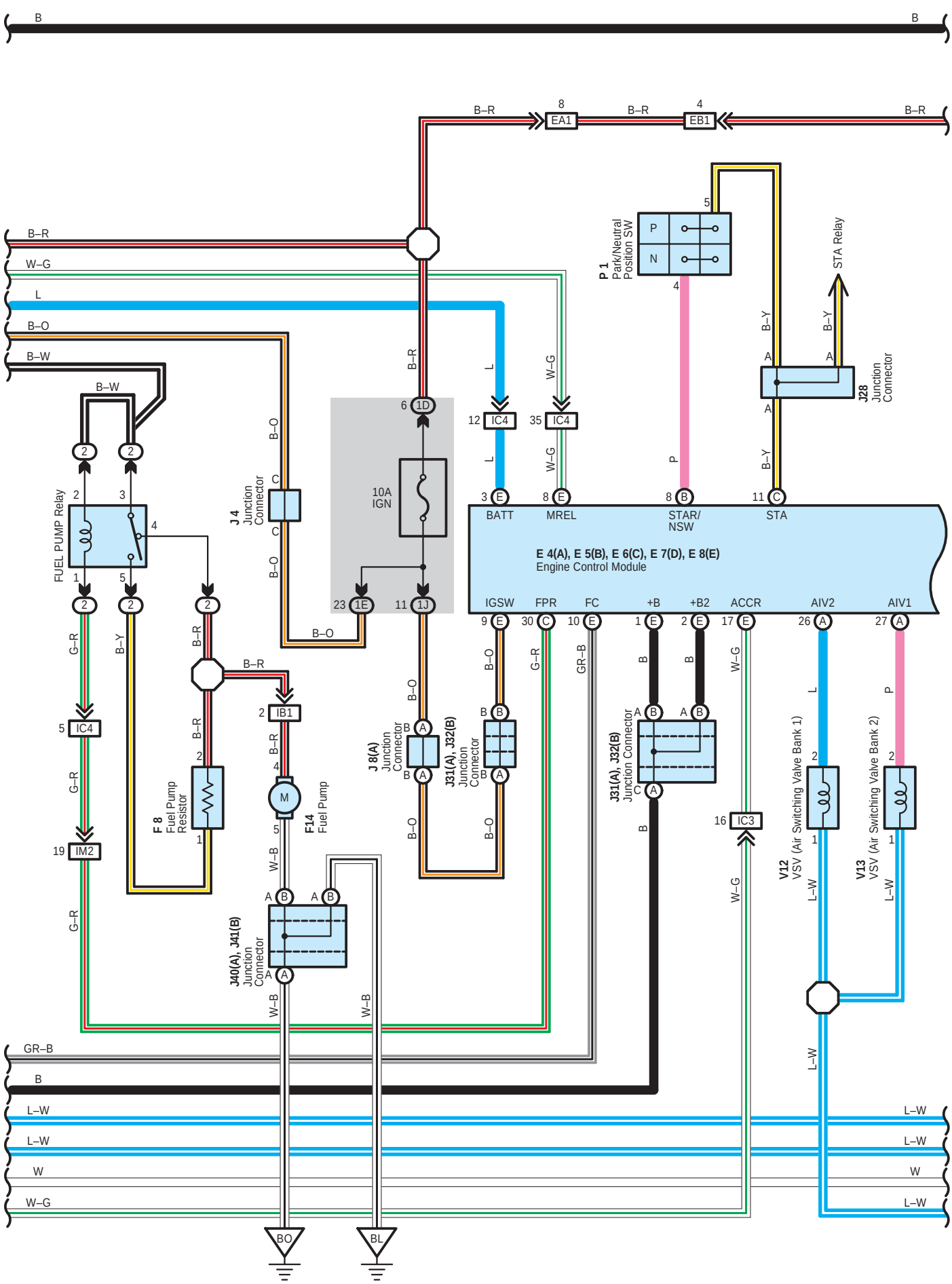
B
B
B–R
8
EA1
B–R
4
EB1
B–R
P 1
Park/Neutral
Position SW
P
N
5
4
STA Relay
B–Y
B–Y
J28
Junction
Connector
A
A
A
B–R
W–G
L
B–O
B–W
B–W
6
1D
L
W–G
12
IC4
35
IC4
L
W–G
P
B–Y
3
E
BATT
8
E
MREL
8
B
STAR/
NSW
11
C
STA
E 4(A), E 5(B), E 6(C), E 7(D), E 8(E)
Engine Control Module
IGSW
FPR
FC
+B
+B2
ACCR
AIV2
AIV1
9
E
30
C
10
E
1
E
2
E
17
E
26
A
27
A
B–O
G–R
GR–B
B
B
W–G
L
P
J 4
Junction
Connector
C
C
B–O
B–O
10A
IGN
23
1E
11
1J
B–O
B–O
B–R
B–R
B–R
B–R
B–R
B–Y
G–R
G–R
G–R
FUEL PUMP Relay
2
3
4
1
5
2
2
2
2
2
5
IC4
19
IM2
F 8
Fuel Pump
Resistor
2
1
2
IB1
4
M
5
F14
Fuel Pump
W–B
W–B
W–B
J 8(A)
Junction
Connector
B
A
B
A
J31(A), J32(B)
Junction
Connector
B
B
B
A
B
A
J31(A), J32(B)
Junction Connector
A
B
A
B
C
A
B
16
IC3
W–G
W–G
V12
VSV (Air Switching Valve Bank 1)
V13
VSV (Air Switching Valve Bank 2)
L
P
2
2
1
1
L–W
L–W
L–W
J40(A), J41(B)
Junction
Connector
A
B
A
B
A
A
W–B
W–B
GR–B
B
L–W
L–W
W
W–G
L–W
L–W
W
L–W
BO
BL

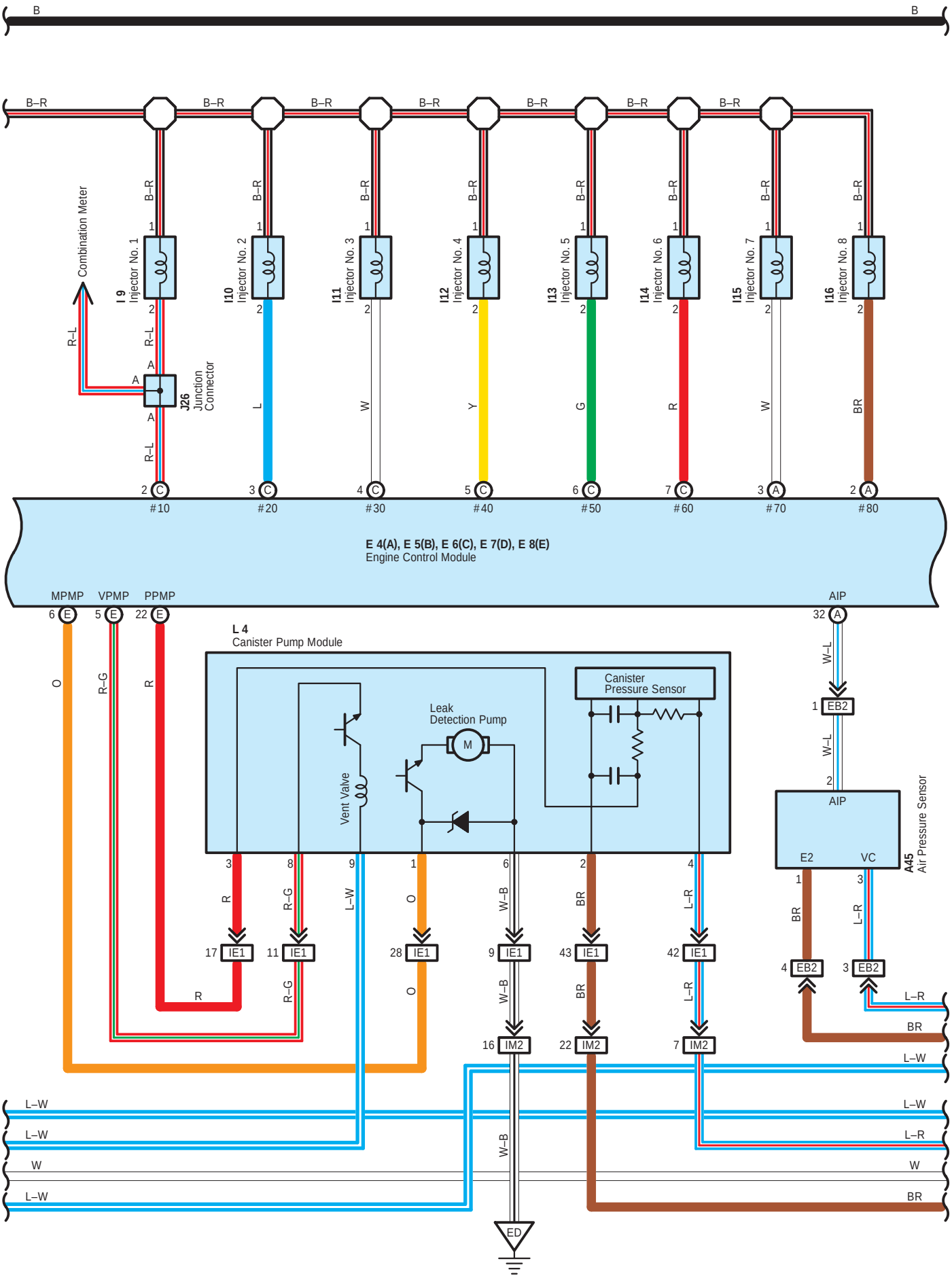
B
B
B–R
Combination Meter
I 9
Injector No. 1
I10
Injector No. 2
I11
Injector No. 3
I12
Injector No. 4
I13
Injector No. 5
I14
Injector No. 6
I15
Injector No. 7
I16
Injector No. 8
R–L
J26
Junction Connector
L
W
Y
G
R
BR
#10
#20
#30
#40
#50
#60
#70
#80
E 4(A), E 5(B), E 6(C), E 7(D), E 8(E)
Engine Control Module
MPMP
VPMP
PPMP
AIP
L 4
Canister Pump Module
Canister
Pressure Sensor
Leak
Detection Pump
Vent Valve
M
O
R–G
R
L–W
W–B
BR
L–R
W–L
IE1
IM2
EB2
E2
VC
A45
Air Pressure Sensor
ED

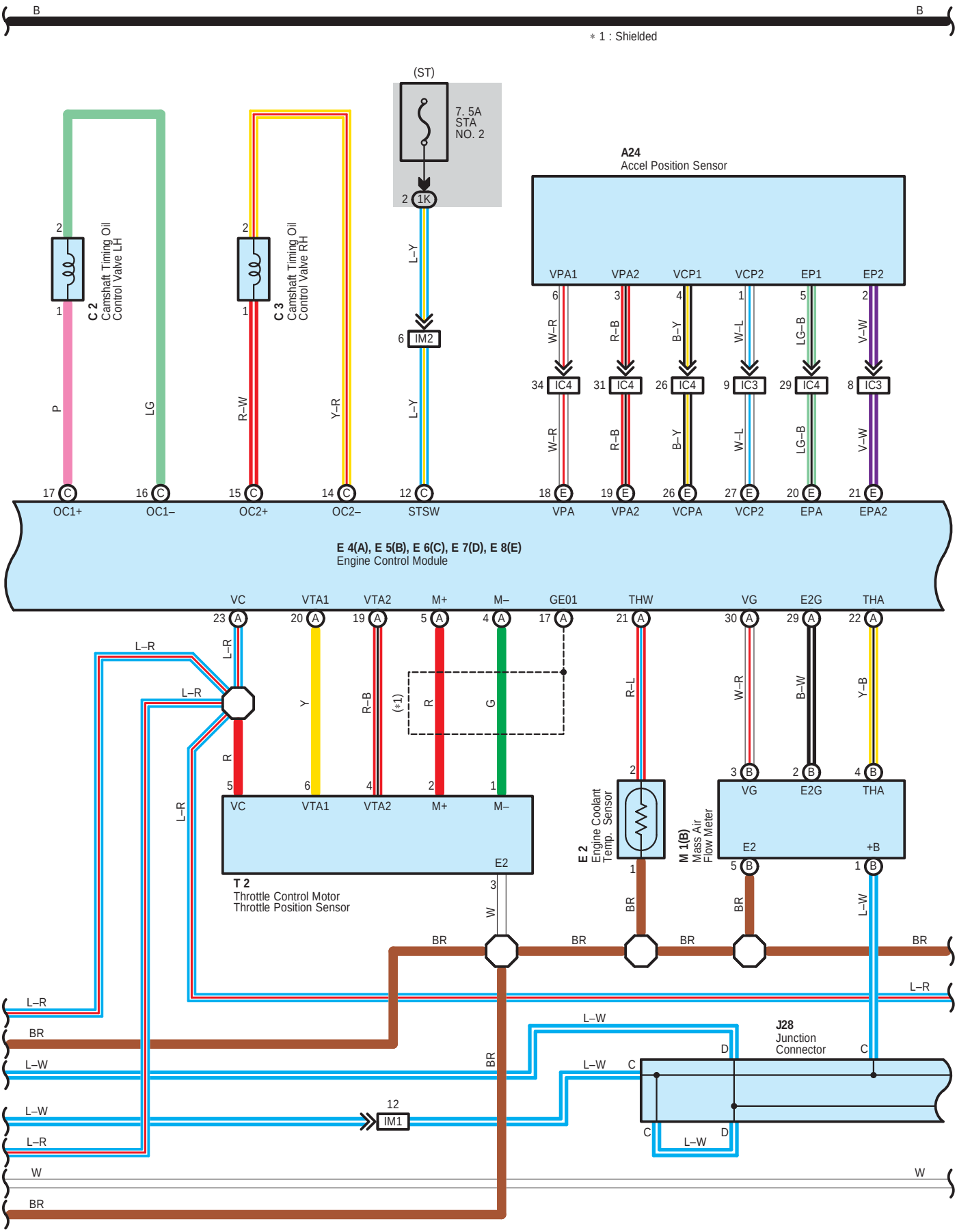
B
B
* 1 : Shielded
(ST)
7. 5A
STA
NO. 2
2
1K
L–Y
6
IM2
L–Y
A24
Accel Position Sensor
VPA1
VPA2
VCP1
VCP2
EP1
EP2
6
3
4
1
5
2
W–R
R–B
B–Y
W–L
LG–B
V–W
34
IC4
31
IC4
26
IC4
9
IC3
29
IC4
8
IC3
W–R
R–B
B–Y
W–L
LG–B
V–W
C 2
Camshaft Timing Oil
Control Valve LH
C 3
Camshaft Timing Oil
Control Valve RH
2
1
2
1
P
LG
R–W
Y–R
17 C
OC1+
16 C
OC1–
15 C
OC2+
14 C
OC2–
12 C
STSW
18 E
VPA
19 E
VPA2
26 E
VCPA
27 E
VCP2
20 E
EPA
21 E
EPA2
E 4(A), E 5(B), E 6(C), E 7(D), E 8(E)
Engine Control Module
VC
VTA1
VTA2
M+
M–
GE01
THW
VG
E2G
THA
23 A
20 A
19 A
5 A
4 A
17 A
21 A
30 A
29 A
22 A
L–R
L–R
R
Y
R–B
(*1)
R
G
R–L
W–R
B–W
Y–B
5
6
4
2
1
2
3 B
2 B
4 B
VC
VTA1
VTA2
M+
M–
E2
VG
E2G
THA
T 2
Throttle Control Motor
Throttle Position Sensor
3
W
E 2
Engine Coolant
Temp. Sensor
1
BR
M 1(B)
Mass Air
Flow Meter
E2
+B
5 B
1 B
BR
L–W
BR
BR
BR
BR
L–R
L–R
BR
L–W
L–W
L–W
L–R
12
IM1
J28
Junction
Connector
D
C
C
D
L–W
W
W
BR

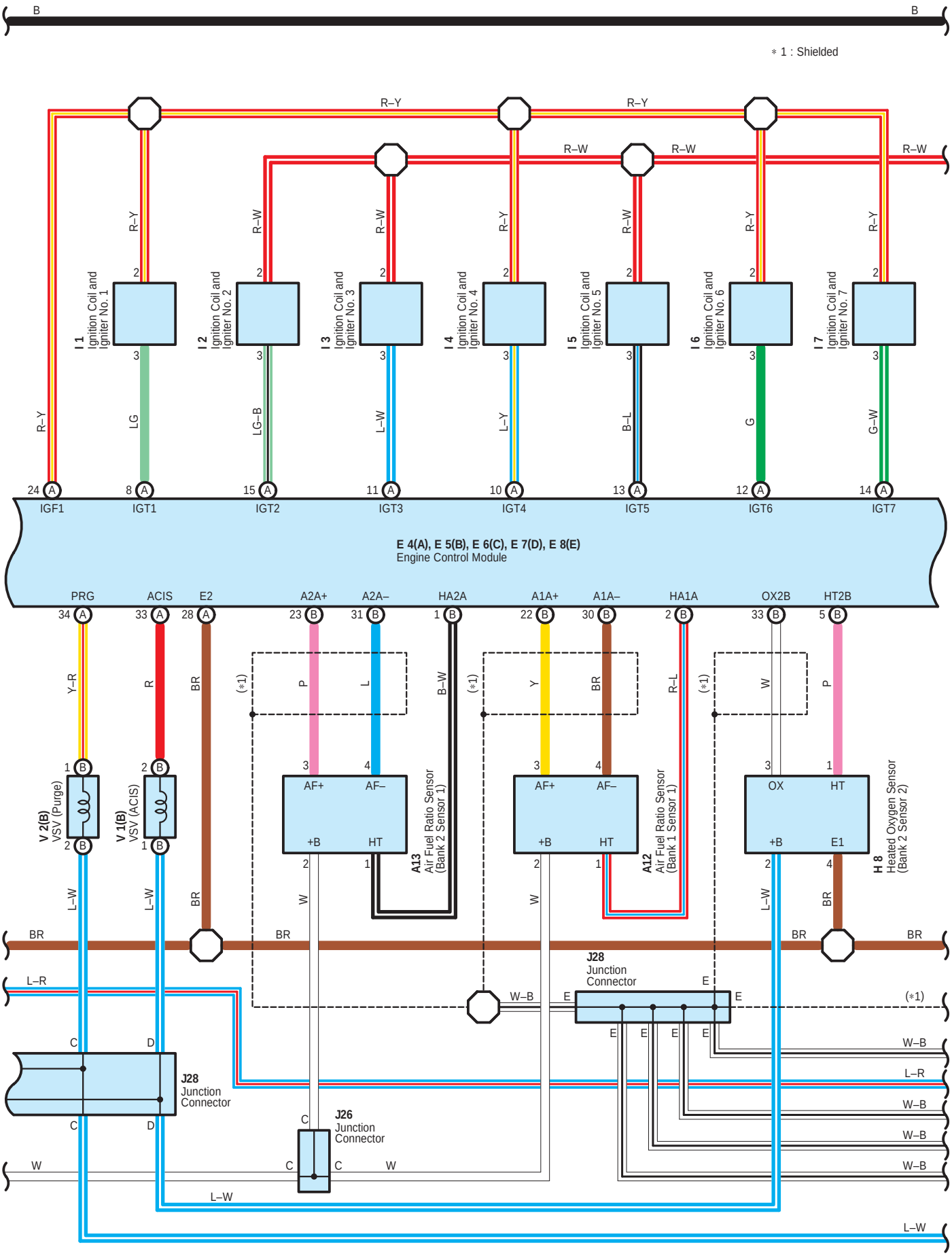
B
B
∗1 : Shielded
R–Y
R–W
I 1 Ignition Coil and Igniter No. 1
I 2 Ignition Coil and Igniter No. 2
I 3 Ignition Coil and Igniter No. 3
I 4 Ignition Coil and Igniter No. 4
I 5 Ignition Coil and Igniter No. 5
I 6 Ignition Coil and Igniter No. 6
I 7 Ignition Coil and Igniter No. 7
LG
LG–B
L–W
L–Y
B–L
G
G–W
24 IGF1
8 IGT1
15 IGT2
11 IGT3
10 IGT4
13 IGT5
12 IGT6
14 IGT7
E 4(A), E 5(B), E 6(C), E 7(D), E 8(E)
Engine Control Module
PRG
ACIS
E2
A2A+
A2A–
HA2A
A1A+
A1A–
HA1A
OX2B
HT2B
V 2(B) VSV (Purge)
V 1(B) VSV (ACIS)
A13 Air Fuel Ratio Sensor (Bank 2 Sensor 1)
A12 Air Fuel Ratio Sensor (Bank 1 Sensor 1)
H 8 Heated Oxygen Sensor (Bank 2 Sensor 2)
AF+
AF–
+B
HT
OX
E1
J28 Junction Connector
J26 Junction Connector
(∗1)
Y–R
R
BR
P
L
B–W
Y
R–L
W
L–R
W–B
L–W
W

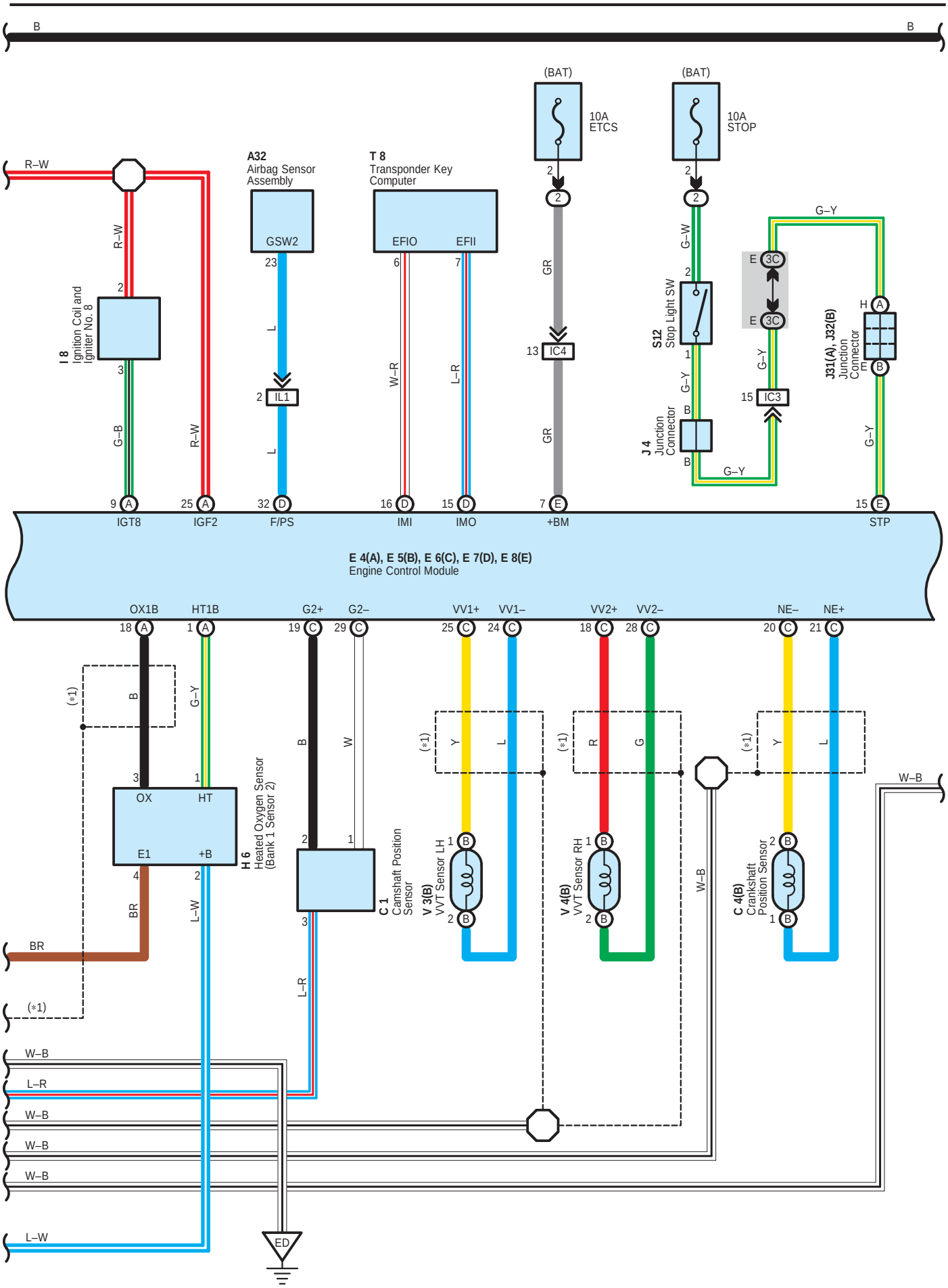
B
B
(BAT)
10A
ETCS
(BAT)
10A
STOP
A32
Airbag Sensor
Assembly
GSW2
T 8
Transponder Key
Computer
EFIO
EFII
R–W
I 8
Ignition Coil and
Igniter No. 8
S12
Stop Light SW
J 4
Junction
Connector
J31(A), J32(B)
Junction
Connector
IL1
IC4
IC3
IGT8
IGF2
F/PS
IMI
IMO
+BM
STP
E 4(A), E 5(B), E 6(C), E 7(D), E 8(E)
Engine Control Module
OX1B
HT1B
G2+
G2–
VV1+
VV1–
VV2+
VV2–
NE–
NE+
H 6
Heated Oxygen Sensor
(Bank 1 Sensor 2)
OX
HT
E1
+B
C 1
Camshaft Position
Sensor
V 3(B)
VVT Sensor LH
V 4(B)
VVT Sensor RH
C 4(B)
Crankshaft
Position Sensor
(*1)
W–B
L–R
L–W
BR
ED

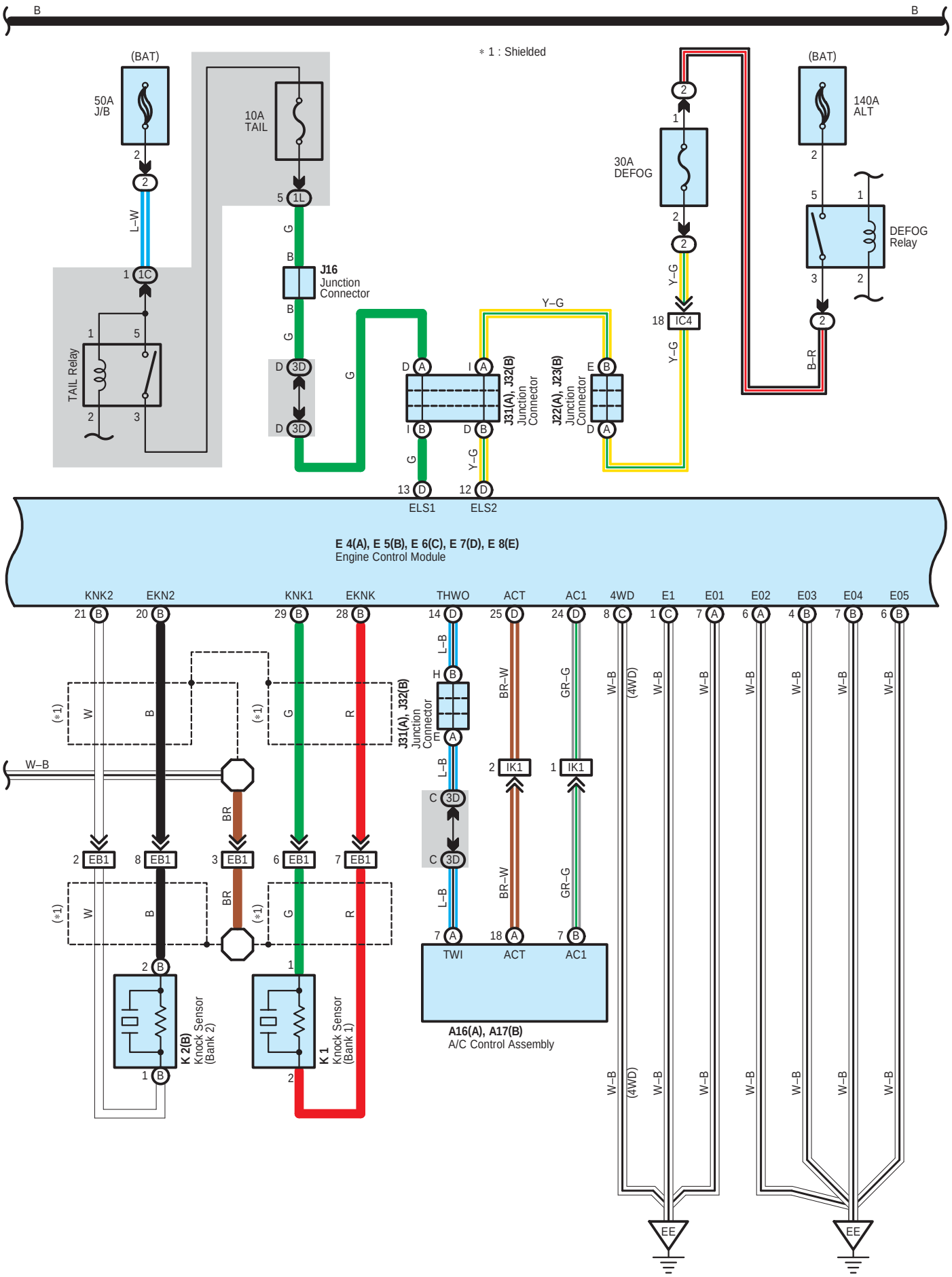
B
B
(BAT)
50A
J/B
10A
TAIL
∗ 1 : Shielded
30A
DEFOG
(BAT)
140A
ALT
DEFOG
Relay
L–W
G
B
J16
Junction
Connector
TAIL Relay
Y–G
IC4
B–R
J31(A), J32(B)
Junction
Connector
J22(A), J23(B)
Junction
Connector
ELS1
ELS2
E 4(A), E 5(B), E 6(C), E 7(D), E 8(E)
Engine Control Module
KNK2
EKN2
KNK1
EKNK
THWO
ACT
AC1
4WD
E1
E01
E02
E03
E04
E05
W–B
BR
BR–W
GR–G
L–B
R
W
(∗1)
EB1
IK1
K 2(B)
Knock Sensor
(Bank 2)
K 1
Knock Sensor
(Bank 1)
A16(A), A17(B)
A/C Control Assembly
TWI
ACT
AC1
(4WD)
EE

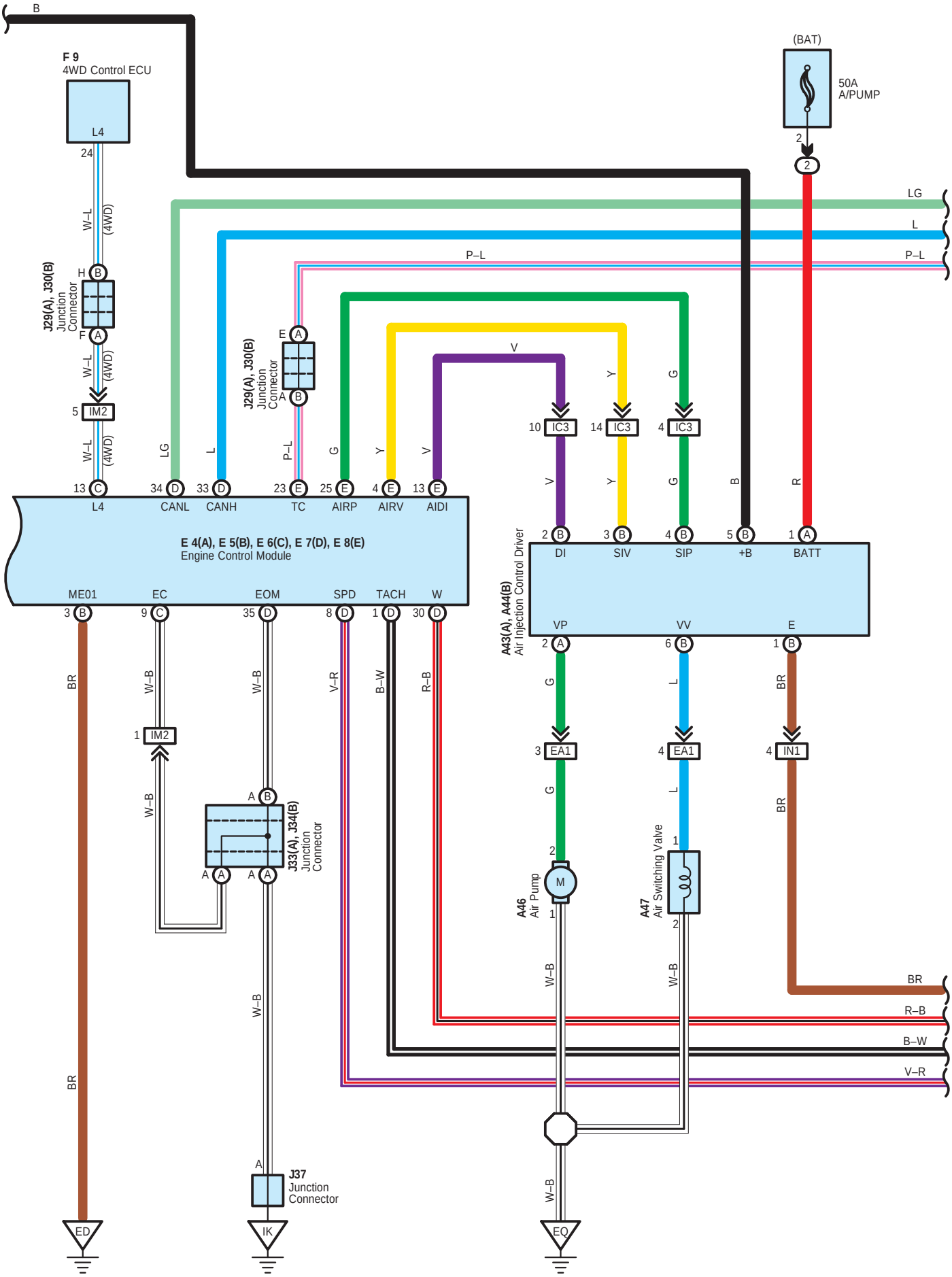
B
F 9
4WD Control ECU
L4
24
W–L
(4WD)
H
B
J29(A), J30(B)
Junction
Connector
F
A
W–L
(4WD)
5
IM2
W–L
(4WD)
13
C
L4
(BAT)
50A
A/PUMP
2
2
LG
L
P–L
P–L
E
A
J29(A), J30(B)
Junction
Connector
A
B
LG
L
P–L
G
Y
V
V
10
IC3
14
IC3
4
IC3
V
Y
G
B
R
34
D
CANL
33
D
CANH
23
E
TC
25
E
AIRP
4
E
AIRV
13
E
AIDI
E 4(A), E 5(B), E 6(C), E 7(D), E 8(E)
Engine Control Module
2
B
DI
3
B
SIV
4
B
SIP
5
B
+B
1
A
BATT
A43(A), A44(B)
Air Injection Control Driver
VP
VV
E
2
A
6
B
1
B
G
L
BR
3
EA1
4
EA1
4
IN1
G
L
BR
2
1
A46
Air Pump
M
1
A47
Air Switching Valve
2
ME01
EC
EOM
SPD
TACH
W
3
B
9
C
35
D
8
D
1
D
30
D
BR
W–B
W–B
V–R
B–W
R–B
1
IM2
W–B
A
B
A
A
A
A
J33(A), J34(B)
Junction
Connector
W–B
BR
BR
R–B
B–W
V–R
A
J37
Junction
Connector
W–B
ED
IK
EQ

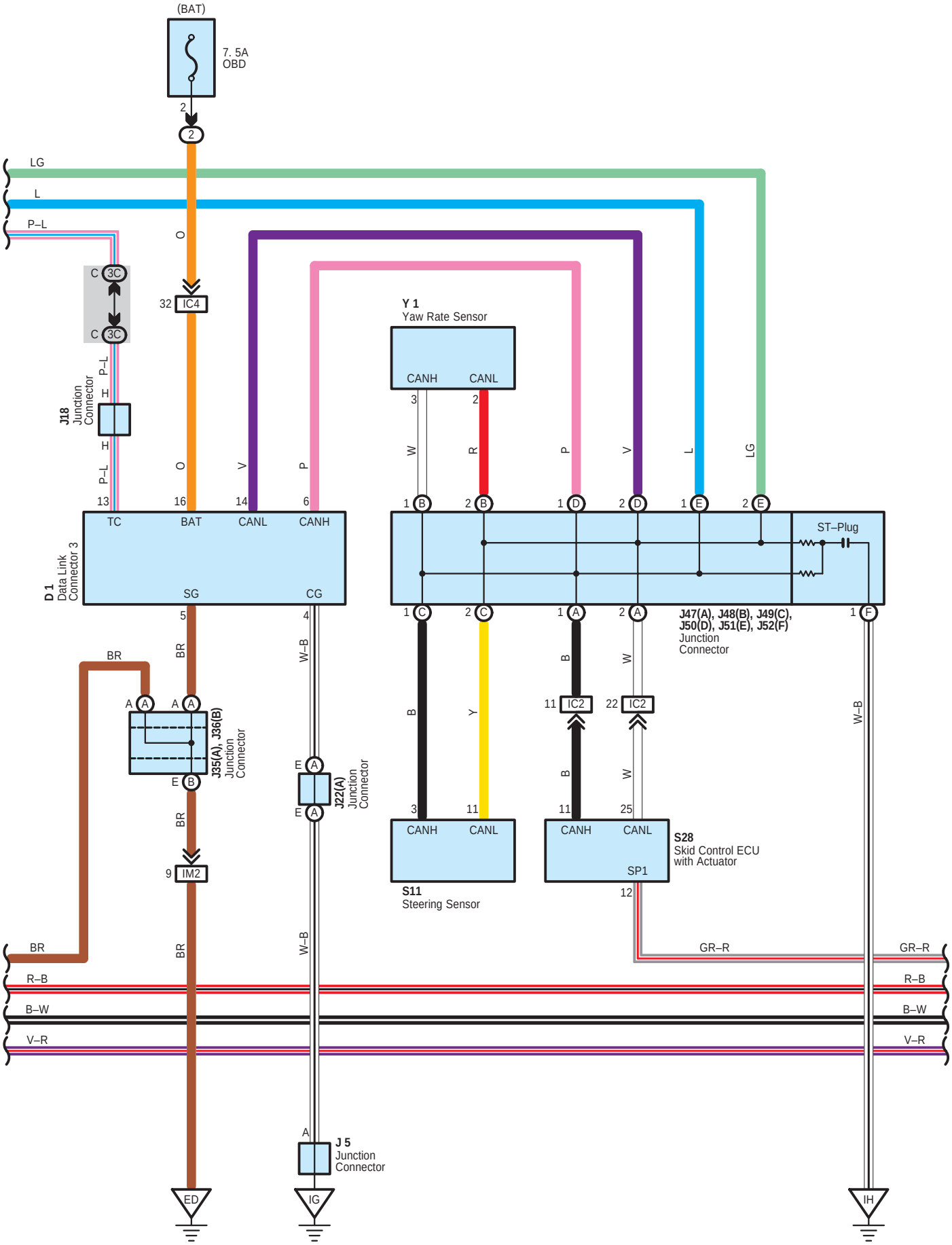
(BAT)
7. 5A
OBD
2
LG
L
P–L
O
C 3C
32 IC4
Y 1
Yaw Rate Sensor
CANH CANL
3 2
W R P V L LG
J18
Junction
Connector
P–L H
H
P–L O V P
13 16 14 6
1 B 2 B 1 D 2 D 1 E 2 E
TC BAT CANL CANH
D 1
Data Link
Connector 3
SG CG
ST–Plug
5 4
BR W–B
1 C 2 C 1 A 2 A 1 F
J47(A), J48(B), J49(C),
J50(D), J51(E), J52(F)
Junction
Connector
B Y B W W–B
11 IC2 22 IC2
A A A A
J35(A), J36(B)
Junction
Connector
E B
E A
J22(A)
Junction
Connector
3 11 11 25
CANH CANL CANH CANL
S28
Skid Control ECU
with Actuator
SP1
12
S11
Steering Sensor
9 IM2
BR
GR–R
R–B
B–W
V–R
A
J 5
Junction
Connector
ED
IG
IH

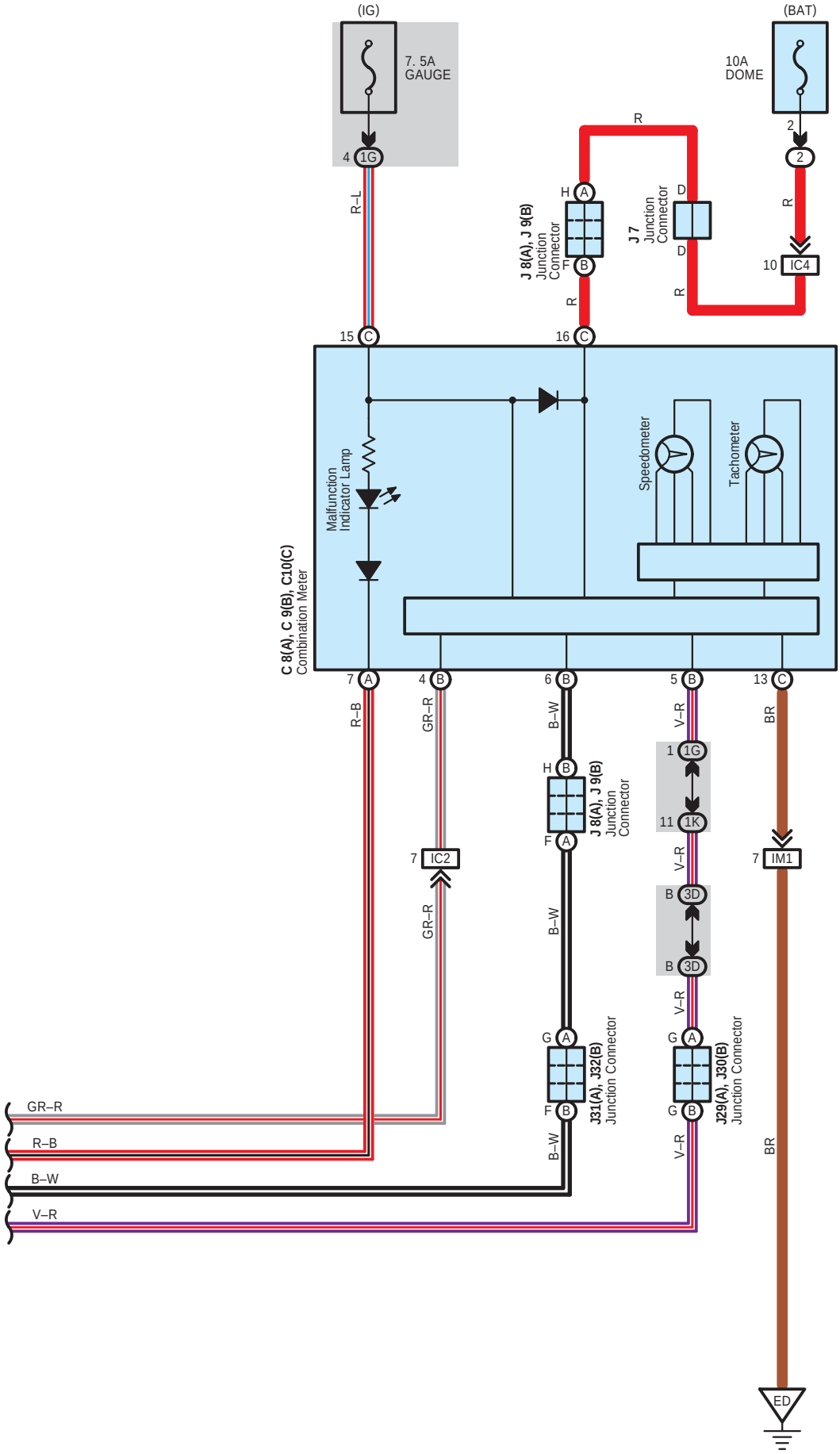
(IG)
7. 5A
GAUGE
4 1G
R–L
(BAT)
10A
DOME
2
2
R
R
H A
J 8(A), J 9(B)
Junction
Connector
F B
R
J 7
Junction
Connector
D
D
R
10 IC4
15 C
16 C
Malfunction
Indicator Lamp
Speedometer
Tachometer
C 8(A), C 9(B), C10(C)
Combination Meter
7 A
4 B
6 B
5 B
13 C
R–B
GR–R
B–W
V–R
BR
1 1G
11 1K
H B
F A
J 8(A), J 9(B)
Junction
Connector
7 IC2
7 IM1
GR–R
B–W
V–R
B 3D
B 3D
G A
F B
J31(A), J32(B)
Junction Connector
G A
G B
J29(A), J30(B)
Junction Connector
BR
GR–R
R–B
B–W
V–R
B–W
V–R
ED

System Outline

The engine control system utilizes a microcomputer and maintains overall control of the engine, transmission etc. An outline of the engine control is given here.

1. Input Signals

(1) Engine coolant temp. signal circuit

The engine coolant temp. sensor detects the engine coolant temp. and has a built–in thermistor with a resistance which varies according to the engine coolant temp. The engine coolant temp. is input into TERMINAL THW of the engine control module as a control signal.

(2) Intake air temp. signal circuit

The intake air temp. sensor is installed in the mass air flow meter and detects the intake air temp., which is input as a control signal to TERMINAL THA of the engine control module.

(3) Oxygen sensor signal circuit

The oxygen density in the exhaust emission is detected and is input as a control signal from the heated oxygen sensors to TERMINALS OX1B and OX2B of the engine control module.

(4) RPM signal circuit

The camshaft position is detected by the camshaft position sensor and is input into TERMINAL G2+ of the engine control module as a control signal. Also, the engine RPM is detected by the crankshaft position sensor and the signal is input into TERMINAL NE+ of the engine control module.

(5) Throttle position sensor signal circuit

The throttle position sensor detects the throttle valve opening angle as a control signal, which is input into TERMINALS VTA1 and VTA2 of the engine control module.

(6) Vehicle speed circuit

The vehicle speed sensor detects the vehicle speed, and the signal is input into TERMINAL SPD of the engine control module via the combination meter, from TERMINAL SP1 of the skid control ECU with actuator.

(7) Battery signal circuit

Voltage is constantly applied to TERMINAL BATT of the engine control module. When the ignition SW is turned on, the voltage for engine control module start up power supply is applied through the EFI relay, to TERMINALS +B and +B2 of the engine control module. The current from the IGN fuse flows to TERMINAL IGSW of the engine control module, and voltage is constantly applied to TERMINAL +BM.

(8) Intake air volume signal circuit

The intake air volume is detected by the mass air flow meter, and is input as a control signal to TERMINAL VG of the engine control module.

(9) Stop light SW signal circuit

The stop light SW is used to detect whether the vehicle is braking or not, and the signal is input into TERMINAL STP of the engine control module as a control signal.

(10) Starter signal circuit

To confirm whether the engine is cranking, the voltage applied to the starter motor when the engine is cranking is detected, and is input into TERMINAL STA of the engine control module as a control signal.

(11) Engine knock signal circuit

Engine knocking is detected by the knock sensors, and is input into TERMINALS KNK1 and KNK2 of the engine control module as a control signal.

(12) A/C SW signal system

The operating voltage of the A/C magnetic clutch is detected and input in the form of a control signal to TERMINAL AC1 of the engine control module.

(13) Air fuel ratio signal system

The air fuel ratio is detected by air fuel ratio sensor and input as a control signal into TERMINALS A1A+ and A2A+ of engine control module.

2. Control System

* SFI system
  The SFI system monitors the engine condition through the signals input from each sensors to the engine control module. The control signal is sent to the engine control module TERMINALS #10, #20, #30, #40, #50, #60, #70 and #80 to operate the injector (Fuel injection). The SFI system controls the fuel injection by the engine control module in response to the driving conditions.
* ESA system
  The ESA system monitors the engine condition through the signals input from each sensors to the engine control module. The best ignition timing is decided according to this data and the data memorized in the engine control module. The control signal is output to TERMINALS IGT1, IGT2, IGT3, IGT4, IGT5, IGT6, IGT7 and IGT8, and these signals control the igniter to provide the best ignition timing.
* Heated oxygen sensor heater control system
  The heated oxygen sensor heater control system turns the heater on when the intake air volume is low (Temp. of exhaust emission is low), and warms up the heated oxygen sensors to improve their detection performance. The engine control module evaluates the signals from each sensors, and outputs current to TERMINAL HT1B or HT2B to control the heater.
* Air fuel ratio sensor heater control system
  The air fuel ratio sensor heater control system turns the heater on when the intake air volume is low (Temp. of exhaust emission is low), and warms up the air fuel ratio sensor to improve detection performance of the sensor.
  The engine control module evaluates the signals from each sensor, current is output to TERMINALS HA1A and HA2A, controlling the heater.
* Fuel pump control system
  The engine control module supplies current to TERMINAL FPR, and controls the operation speed of the fuel pump with the FUEL PUMP relay.
* ACIS
  The ACIS includes a valve in the bulkhead separating the surge tank into two parts. This valve is opened and closed in accordance with the driving conditions to control the intake manifold length in two stages, for increased engine output in all ranges from low to high speeds.
* ETCS–i
  The ETCS–i controls the engine output at its optimal level in accordance with the opening of the accelerator pedal, under all driving conditions.
* Engine start control system
  The engine control module allows power to be supplied from the TERMINAL STAR/NSW to the STA relay via park/neutral position SW until complete combustion is confirmed by engine RPM after the detection of ignition SW ST signal by the TERMINAL STSW.
  With this arrangement, engine can be started without holding the ignition key in the ST position. At the same time, the TERMINAL ACCR is controlled so that the engine control module turns off ACC CUT relay, shutting off power to the accessories.
* VVT–i
  Controls the intake camshaft to an optimal valve timing in accordance with the engine condition.
* Air Injection System
  It is the system to improve exhaust control performance by activating catalyst at early stage, which is realized when air is pressed and sent into the exhaust pipe forcibly by the air injection pump at starting engine in cold condition.

3. Diagnosis System

When there is a malfunction in the engine control module signal system, the malfunctioning system is recorded in the memory. The malfunctioning system can be found by reading the code displayed on the malfunction indicator lamp.

4. Fail–Safe System

When a malfunction has occurred in any system, there is a possibility of causing engine trouble due to continued control based on that system. In that case, the fail–safe system either controls the system using the data (Standard values) recorded in the engine control module memory, or else stops the engine.

: Parts Location

Code	See Page	Code	See Page	Code	See Page
A12	32 (2UZ–FE)	I3	33 (2UZ–FE)	J33 A	38
A13	32 (2UZ–FE)	I4	33 (2UZ–FE)	J34 B	38
A16 A	36	I5	33 (2UZ–FE)	J35 A	38
A17 B	36	I6	33 (2UZ–FE)	J36 B	38
A24	36	I7	33 (2UZ–FE)	J37	38
A32	36	I8	33 (2UZ–FE)	J40 A	40
A43 A	32 (2UZ–FE)	I9	33 (2UZ–FE)	J41 B	40
A44 B	32 (2UZ–FE)	I10	33 (2UZ–FE)	J47 A	38
A45	32 (2UZ–FE)	I11	33 (2UZ–FE)	J48 B	38
A46	32 (2UZ–FE)	I12	33 (2UZ–FE)	J49 C	38
A47	32 (2UZ–FE)	I13	33 (2UZ–FE)	J50 D	38
C1	32 (2UZ–FE)	I14	33 (2UZ–FE)	J51 E	38
C2	32 (2UZ–FE)	I15	33 (2UZ–FE)	J52 F	38
C3	32 (2UZ–FE)	I16	33 (2UZ–FE)	K1	33 (2UZ–FE)
C4 B	32 (2UZ–FE)	I18	37	K2 B	33 (2UZ–FE)
C8 A	37	J2 A	33 (2UZ–FE)	L4	40
C9 B	37	J3 B	33 (2UZ–FE)	M1 B	33 (2UZ–FE)
C10 C	37	J4	38	P1	33 (2UZ–FE)
D1	37	J5	38	S11	39
E2	32 (2UZ–FE)	J7	38	S12	39
E4 A	37	J8 A	38	S28	33 (2UZ–FE)
E5 B	37	J9 B	38	T2	33 (2UZ–FE)
E6 C	37	J16	38	T8	39
E7 D	37	J18	38	V1 B	33 (2UZ–FE)
E8 E	37	J22 A	38	V2 B	33 (2UZ–FE)
F8	32 (2UZ–FE)	J23 B	38	V3 B	33 (2UZ–FE)
F9	37	J26	38	V4 B	33 (2UZ–FE)
F14	40	J28	38	V12	33 (2UZ–FE)
H6	32 (2UZ–FE)	J29 A	38	V13	33 (2UZ–FE)
H8	32 (2UZ–FE)	J30 B	38	Y1	39
I1	33 (2UZ–FE)	J31 A	38		
I2	33 (2UZ–FE)	J32 B	38		

: Relay Blocks

Code	See Page	Relay Blocks (Relay Block Location)
2	22	Engine Room R/B (Engine Compartment Left)

: Junction Block and Wire Harness Connector

Code	See Page	Junction Block and Wire Harness (Connector Location)
1C	24	Engine Room Main Wire and Driver Side J/B (Lower Finish Panel)
1D		
1E		
1G	25	Instrument Panel Wire and Driver Side J/B (Lower Finish Panel)
1J		
1K		
1L		
3C	28	Instrument Panel Wire and Center J/B (Instrument Panel Brace RH)
3D		
3E		

: Connector Joining Wire Harness and Wire Harness

Code	See Page	Joining Wire Harness and Wire Harness (Connector Location)
EA1	44 (2UZ–FE)	Engine No.2 Wire and Engine Room Main Wire (Under the Engine Room R/B)
EB1	44 (2UZ–FE)	Engine No.2 Wire and Engine Wire (Near the Starter)
EB2		
IB1	46	Floor No.2 Wire and Engine Room Main Wire (Left Kick Panel)
IB2		
IC2	46	Instrument Panel Wire and Engine Room Main Wire (Left Kick Panel)
IC3		
IC4		
IE1	46	Instrument Panel Wire and Floor No.2 Wire (Left Kick Panel)
IK1	47	Instrument Panel Wire and Instrument Panel Wire (Left Upper Side of the Glove Box)
IL1	47	Instrument Panel Wire and Instrument Panel Wire (Right Upper Side of the Glove Box)
IM1	47	Engine Wire and Instrument Panel Wire (Right Side of Blower Unit)
IM2		
IN1	47	Instrument Panel Wire and Engine Room Main Wire (Right Kick Panel)

: Ground Points

Code	See Page	Ground Points Location
EB	44 (2UZ–FE)	Front Left Fender
ED	44 (2UZ–FE)	Left Bank Cylinder Head
EE	44 (2UZ–FE)	Rear Side of Cylinder Block
EQ	44 (2UZ–FE)	Near the Starter
IG	46	Left Kick Panel
IH	46	Instrument Panel Brace LH
IK	46	Right Kick Panel
BL	48	Floor Seat Crossmember LH
BO	48	Rear Pillar LH

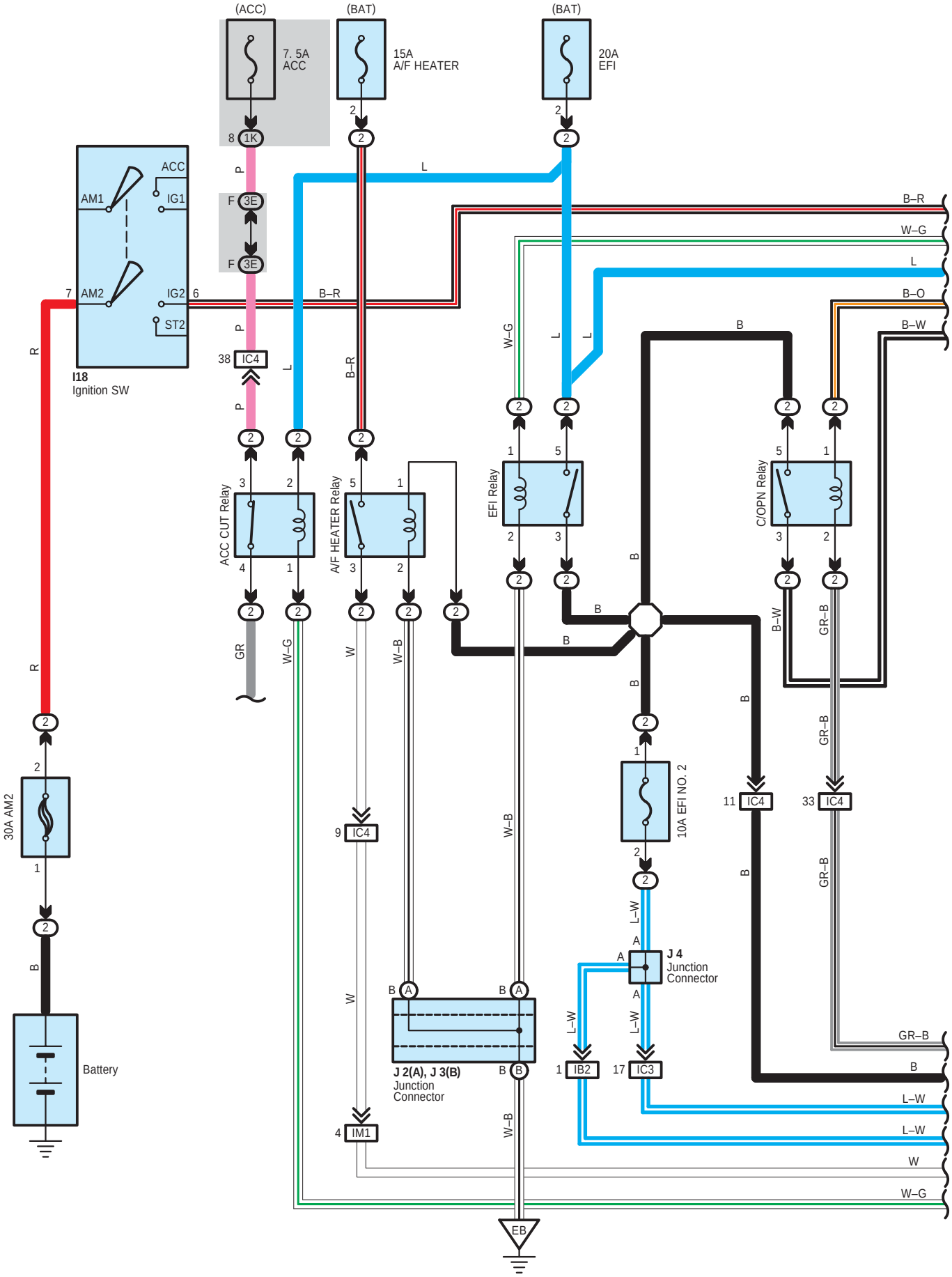
(ACC)
(BAT)
(BAT)
7. 5A
ACC
15A
A/F HEATER
20A
EFI
8 1K
2
2
ACC
AM1
IG1
AM2
IG2
ST2
7
6
I18
Ignition SW
F 3E
F 3E
38 IC4
P
L
B–R
W–G
B–O
B–W
R
B
ACC CUT Relay
A/F HEATER Relay
EFI Relay
C/OPN Relay
GR
W–G
W
W–B
GR–B
30A AM2
Battery
9 IC4
4 IM1
J 2(A), J 3(B)
Junction
Connector
10A EFI NO. 2
11 IC4
33 IC4
L–W
J 4
Junction
Connector
1 IB2
17 IC3
EB

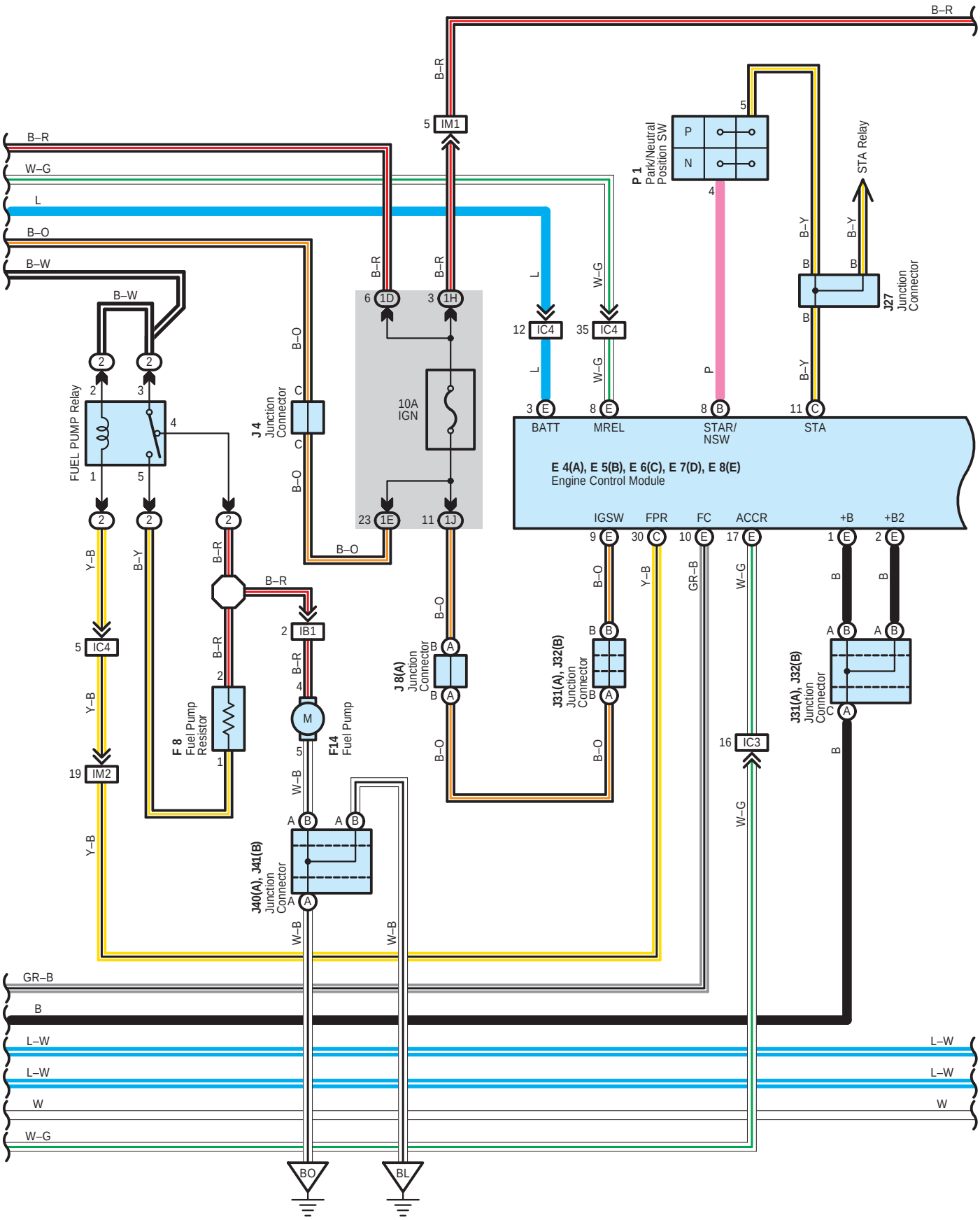
B–R
W–G
L
B–O
B–W
Y–B
B–Y
GR–B
B
L–W
W
W–B
5 IM1
P 1
Park/Neutral
Position SW
P
N
STA Relay
J27
Junction
Connector
6 1D
3 1H
10A
IGN
12 IC4
35 IC4
3 E
BATT
8 E
MREL
8 B
STAR/
NSW
11 C
STA
E 4(A), E 5(B), E 6(C), E 7(D), E 8(E)
Engine Control Module
IGSW
FPR
FC
ACCR
+B
+B2
9 E
30 C
10 E
17 E
1 E
2 E
FUEL PUMP Relay
J 4
Junction
Connector
23 1E
11 1J
5 IC4
19 IM2
F 8
Fuel Pump
Resistor
2 IB1
M
F14
Fuel Pump
J 8(A)
Junction
Connector
J31(A), J32(B)
Junction
Connector
16 IC3
J40(A), J41(B)
Junction
Connector
BO
BL

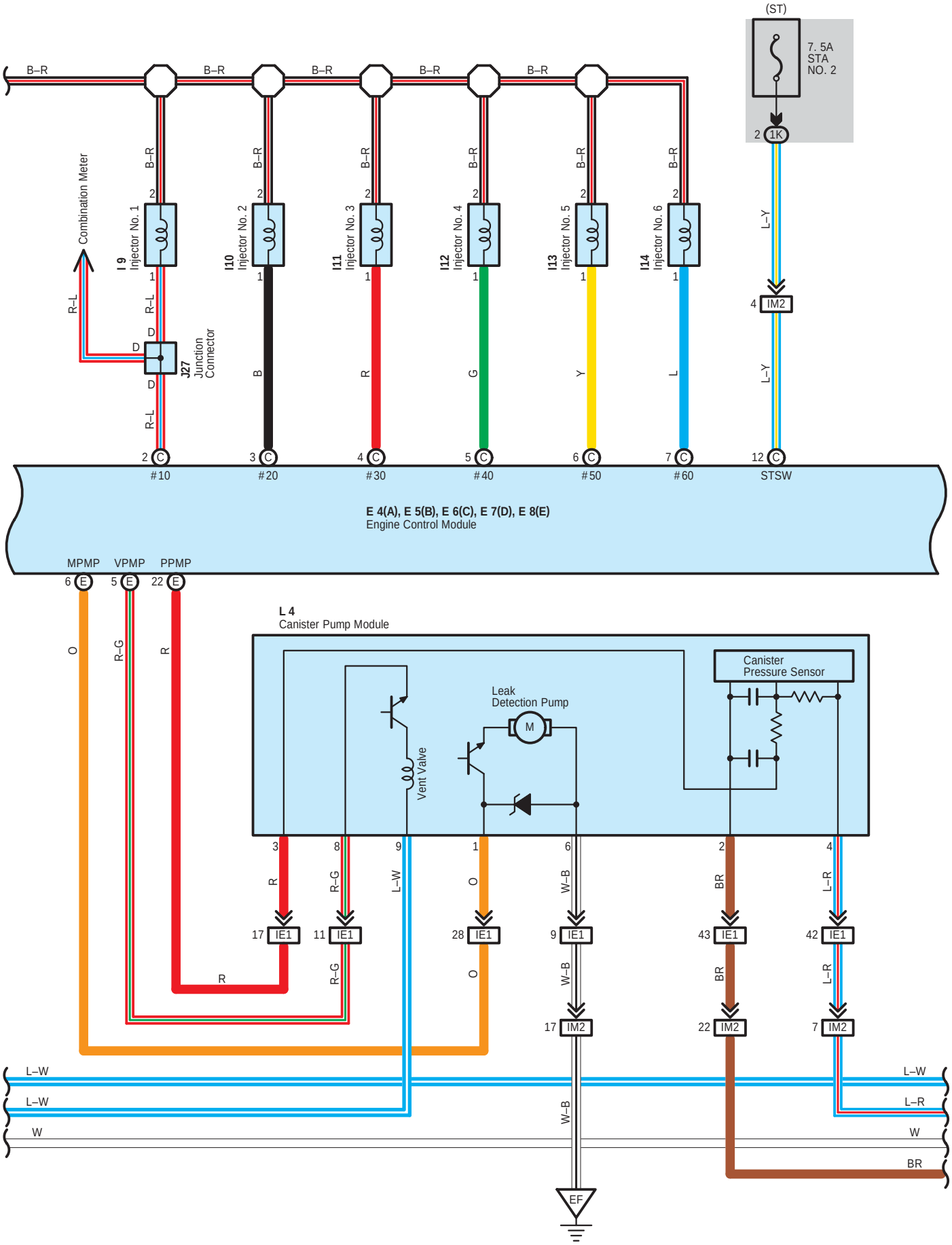
(ST)
7. 5A
STA
NO. 2
2 1K
B–R
Combination Meter
I 9
Injector No. 1
I10
Injector No. 2
I11
Injector No. 3
I12
Injector No. 4
I13
Injector No. 5
I14
Injector No. 6
R–L
D
J27
Junction
Connector
B
R
G
Y
L
L–Y
4 IM2
2 C #10
3 C #20
4 C #30
5 C #40
6 C #50
7 C #60
12 C STSW
E 4(A), E 5(B), E 6(C), E 7(D), E 8(E)
Engine Control Module
MPMP
VPMP
PPMP
6 E
5 E
22 E
O
R–G
R
L 4
Canister Pump Module
Canister
Pressure Sensor
Leak
Detection Pump
M
Vent Valve
3
8
9
1
6
2
4
L–W
W–B
BR
L–R
17 IE1
11 IE1
28 IE1
9 IE1
43 IE1
42 IE1
17 IM2
22 IM2
7 IM2
W
EF

∗ 1 : Shielded

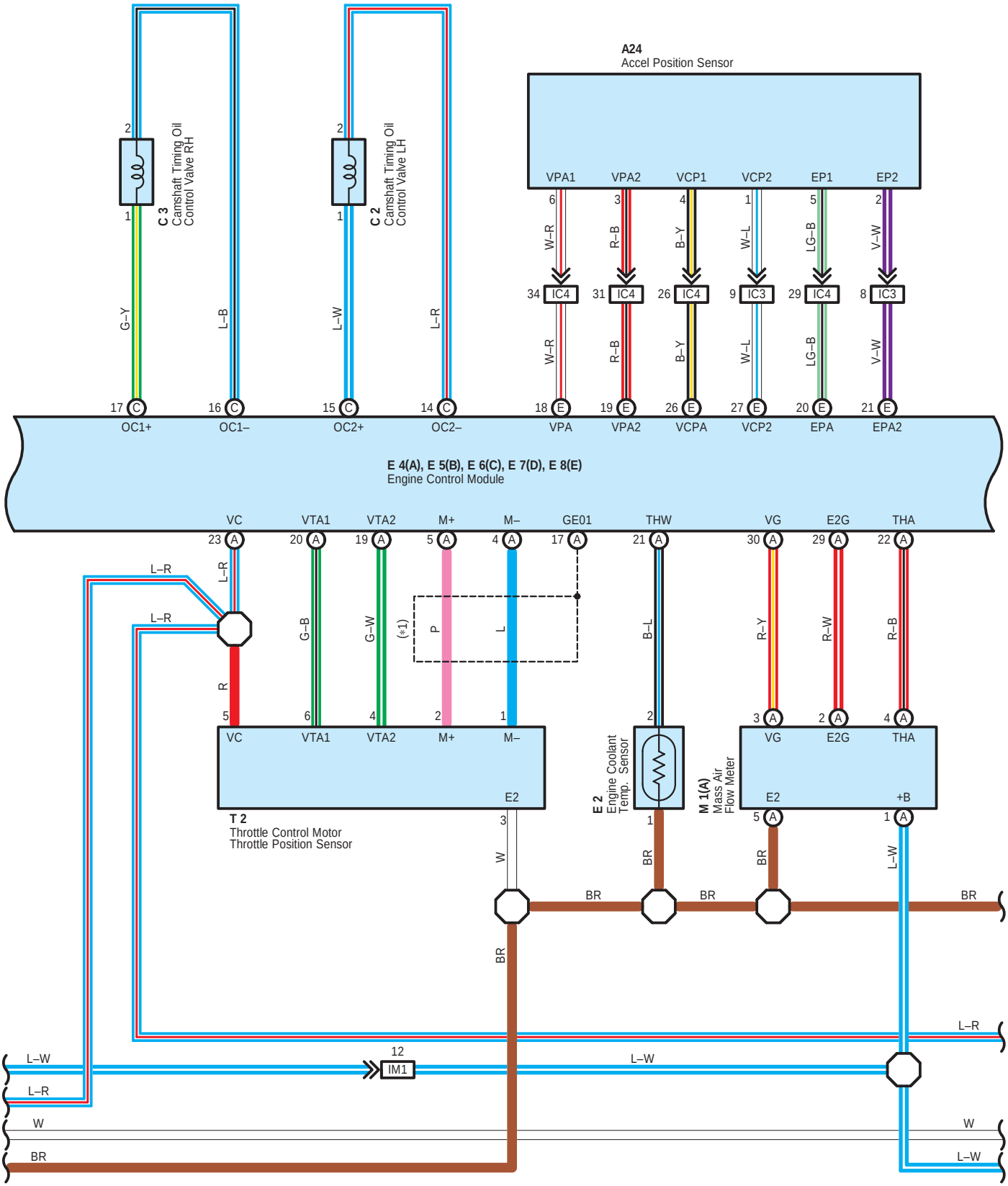
A24
Accel Position Sensor
VPA1
VPA2
VCP1
VCP2
EP1
EP2
C 3
Camshaft Timing Oil Control Valve RH
C 2
Camshaft Timing Oil Control Valve LH
OC1+
OC1–
OC2+
OC2–
VPA
VPA2
VCPA
VCP2
EPA
EPA2
E 4(A), E 5(B), E 6(C), E 7(D), E 8(E)
Engine Control Module
VC
VTA1
VTA2
M+
M–
GE01
THW
VG
E2G
THA
T 2
Throttle Control Motor
Throttle Position Sensor
E 2
Engine Coolant Temp. Sensor
M 1(A)
Mass Air Flow Meter
E2
+B
IM1

∗ 1 : Shielded

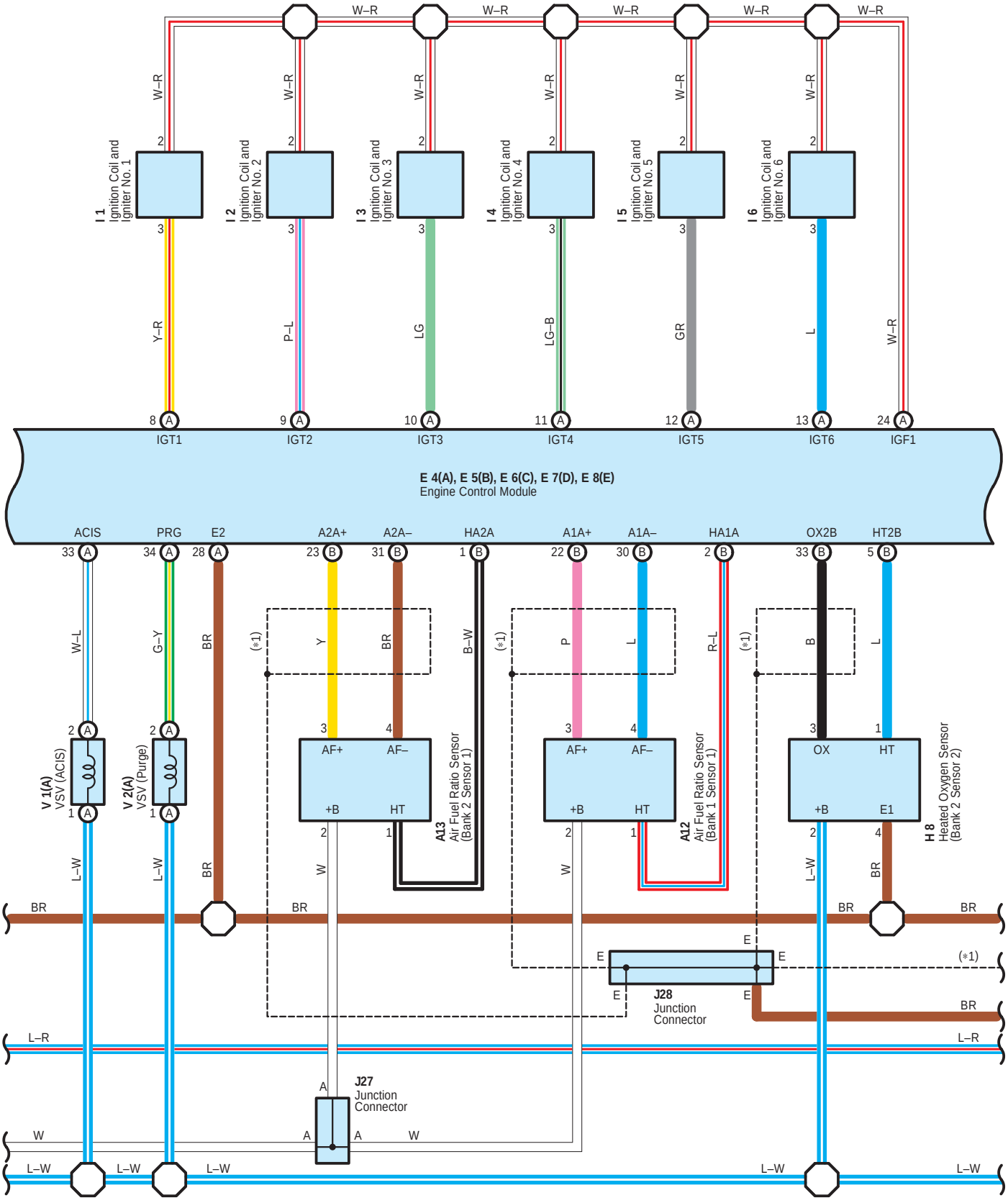
W–R
I 1 Ignition Coil and Igniter No. 1
I 2 Ignition Coil and Igniter No. 2
I 3 Ignition Coil and Igniter No. 3
I 4 Ignition Coil and Igniter No. 4
I 5 Ignition Coil and Igniter No. 5
I 6 Ignition Coil and Igniter No. 6
Y–R
P–L
LG
LG–B
GR
L
IGT1
IGT2
IGT3
IGT4
IGT5
IGT6
IGF1
E 4(A), E 5(B), E 6(C), E 7(D), E 8(E)
Engine Control Module
ACIS
PRG
E2
A2A+
A2A–
HA2A
A1A+
A1A–
HA1A
OX2B
HT2B
W–L
G–Y
BR
Y
B–W
P
R–L
B
V 1(A) VSV (ACIS)
V 2(A) VSV (Purge)
AF+
AF–
+B
HT
A13 Air Fuel Ratio Sensor (Bank 2 Sensor 1)
A12 Air Fuel Ratio Sensor (Bank 1 Sensor 1)
OX
E1
H 8 Heated Oxygen Sensor (Bank 2 Sensor 2)
L–W
W
J28 Junction Connector
J27 Junction Connector
L–R

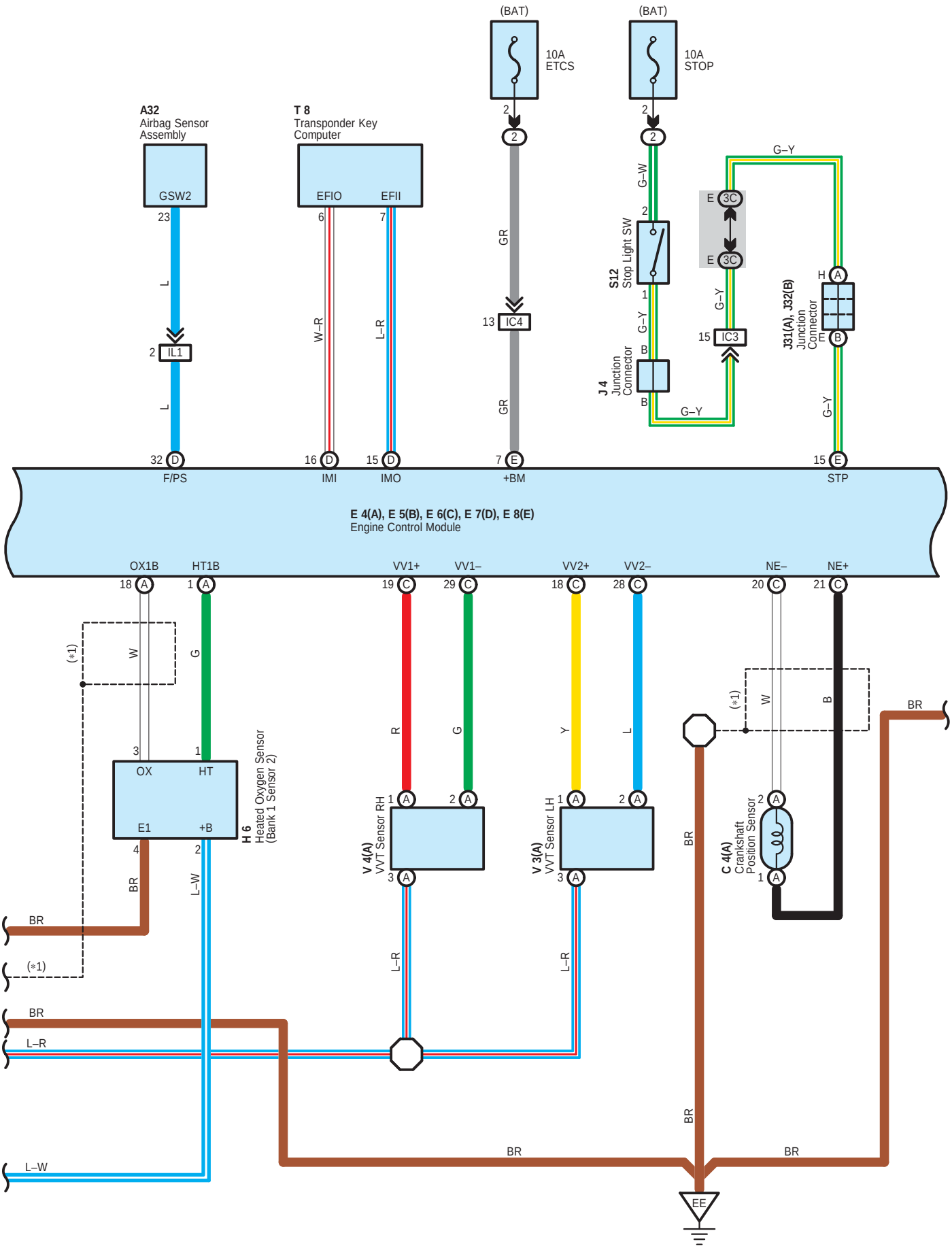
(BAT)
10A
ETCS
(BAT)
10A
STOP
A32
Airbag Sensor
Assembly
GSW2
23
L
2
IL1
L
32
D
F/PS
T 8
Transponder Key
Computer
EFIO
EFII
6
7
W–R
L–R
16
D
IMI
15
D
IMO
GR
13
IC4
GR
7
E
+BM
2
G–W
2
S12
Stop Light SW
1
G–Y
B
J 4
Junction
Connector
B
G–Y
E 3C
E 3C
G–Y
15
IC3
G–Y
H
A
J31(A), J32(B)
Junction
Connector
F1
B
G–Y
15
E
STP
E 4(A), E 5(B), E 6(C), E 7(D), E 8(E)
Engine Control Module
OX1B
HT1B
18
A
1
A
(*1)
W
G
3
1
OX
HT
E1
+B
4
2
BR
L–W
H 6
Heated Oxygen Sensor
(Bank 1 Sensor 2)
VV1+
VV1–
VV2+
VV2–
19
C
29
C
18
C
28
C
R
G
Y
L
1
A
2
A
3
A
V 4(A)
VVT Sensor RH
V 3(A)
VVT Sensor LH
L–R
L–R
NE–
NE+
20
C
21
C
(*1)
W
B
BR
2
A
1
A
C 4(A)
Crankshaft
Position Sensor
BR
BR
BR
BR
BR
BR
L–R
L–W
EE

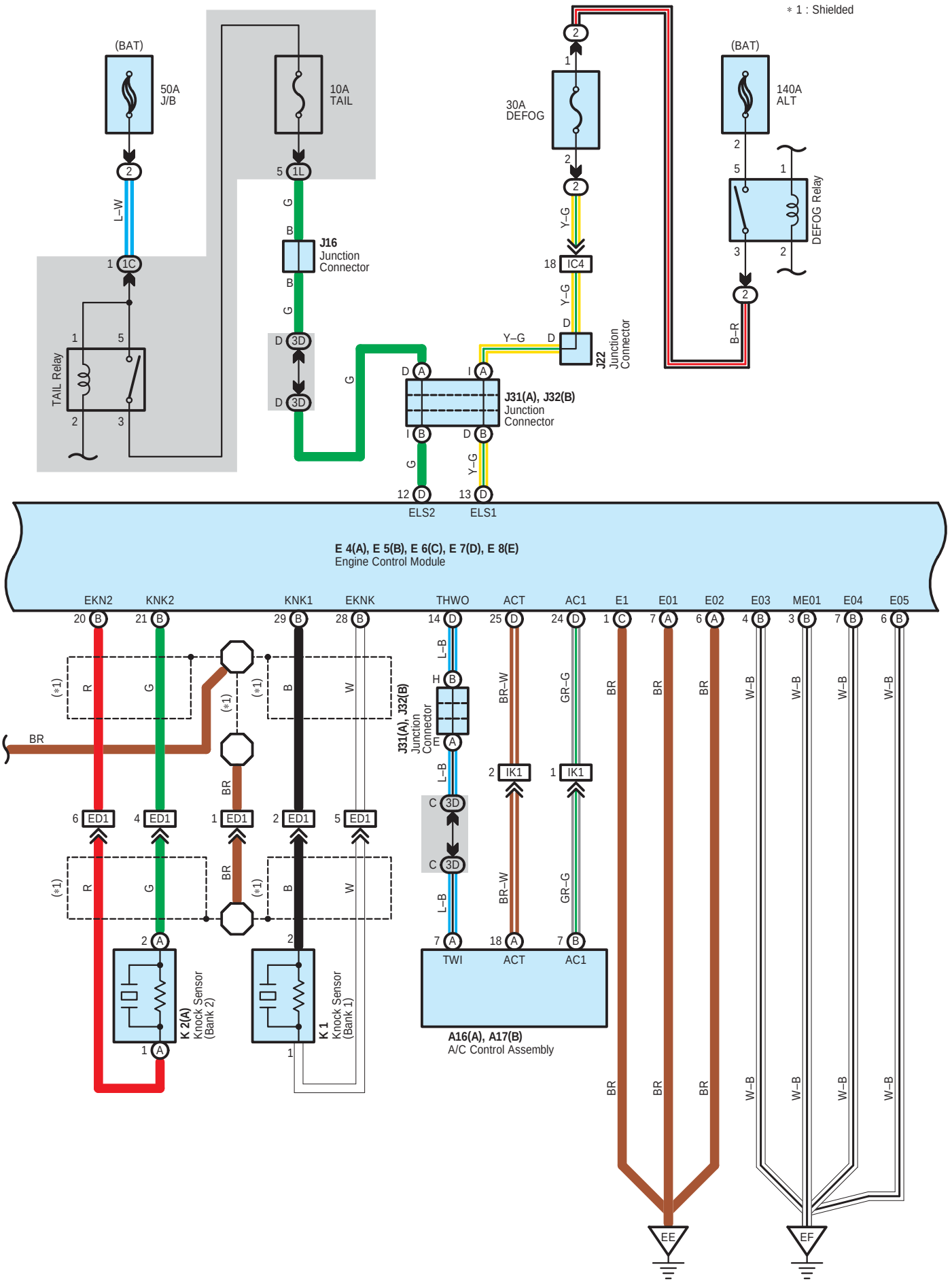
* 1 : Shielded
(BAT)
50A
J/B
10A
TAIL
30A
DEFOG
(BAT)
140A
ALT
DEFOG Relay
TAIL Relay
J16
Junction
Connector
J22
Junction
Connector
J31(A), J32(B)
Junction
Connector
ELS2
ELS1
E 4(A), E 5(B), E 6(C), E 7(D), E 8(E)
Engine Control Module
EKN2
KNK2
KNK1
EKNK
THWO
ACT
AC1
E1
E01
E02
E03
ME01
E04
E05
K 2(A)
Knock Sensor
(Bank 2)
K 1
Knock Sensor
(Bank 1)
A16(A), A17(B)
A/C Control Assembly
TWI
ACT
AC1
EE
EF

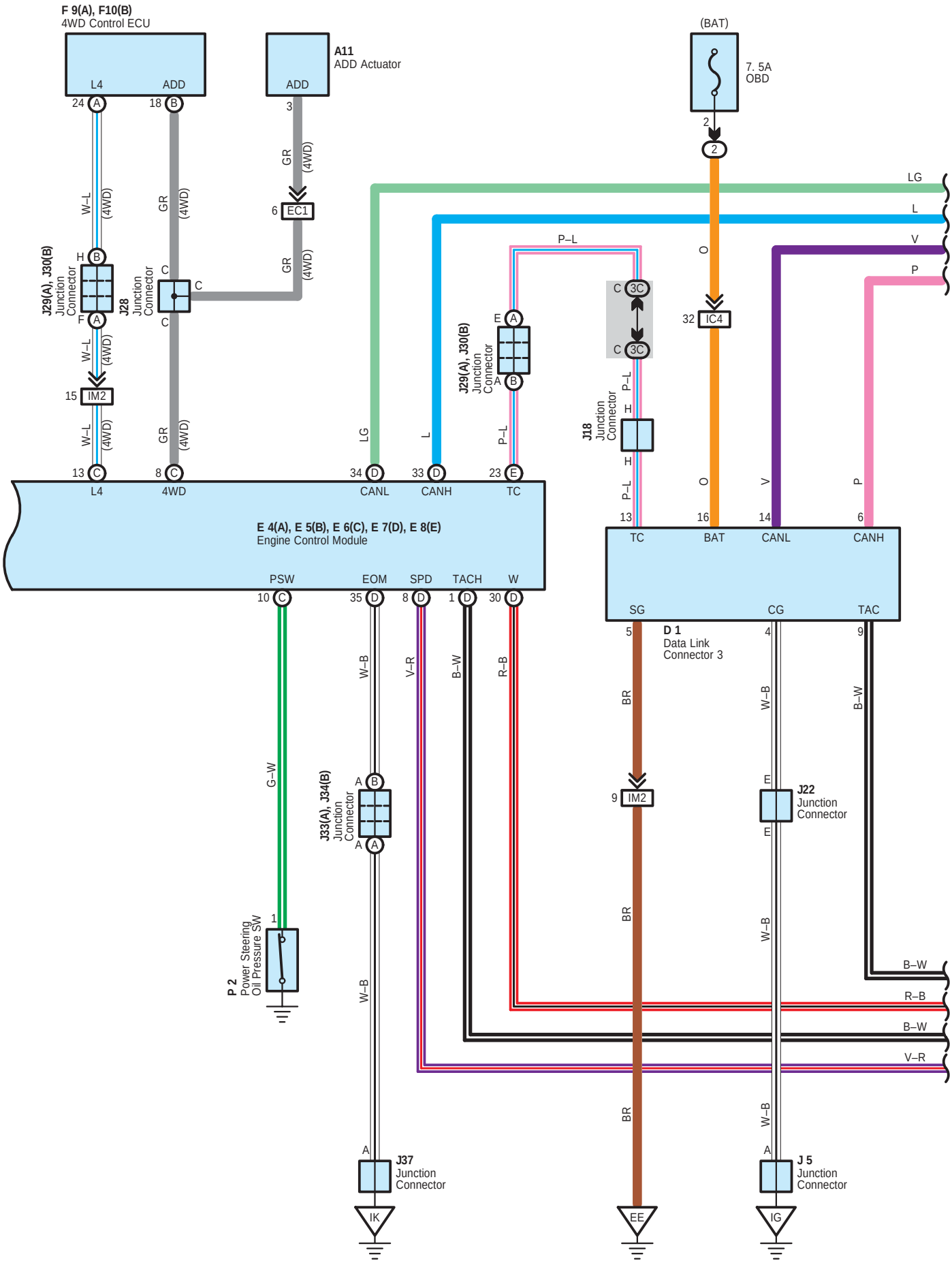
F 9(A), F10(B)
4WD Control ECU
L4
ADD
24 A
18 B
A11
ADD Actuator
ADD
3
GR (4WD)
6 EC1
GR (4WD)
(BAT)
7. 5A
OBD
2
2
LG
L
V
P
O
P–L
W–L (4WD)
GR (4WD)
J29(A), J30(B) Junction Connector
H B
F A
J28 Junction Connector
C C
C
15 IM2
W–L (4WD)
GR (4WD)
13 C
8 C
L4
4WD
34 D
33 D
23 E
CANL
CANH
TC
J29(A), J30(B) Junction Connector
E A
A B
C 3C
C 3C
J18 Junction Connector
H
H
P–L
13
TC
32 IC4
O
16
BAT
V
14
CANL
P
6
CANH
E 4(A), E 5(B), E 6(C), E 7(D), E 8(E)
Engine Control Module
PSW
EOM
SPD
TACH
W
10 C
35 D
8 D
1 D
30 D
SG
CG
TAC
5
4
9
D 1
Data Link Connector 3
G–W
W–B
V–R
B–W
R–B
BR
W–B
B–W
J33(A), J34(B) Junction Connector
A B
A A
9 IM2
J22 Junction Connector
P 2
Power Steering Oil Pressure SW
1
W–B
B–W
R–B
B–W
V–R
A
J37 Junction Connector
IK
BR
EE
W–B
A
J 5 Junction Connector
IG

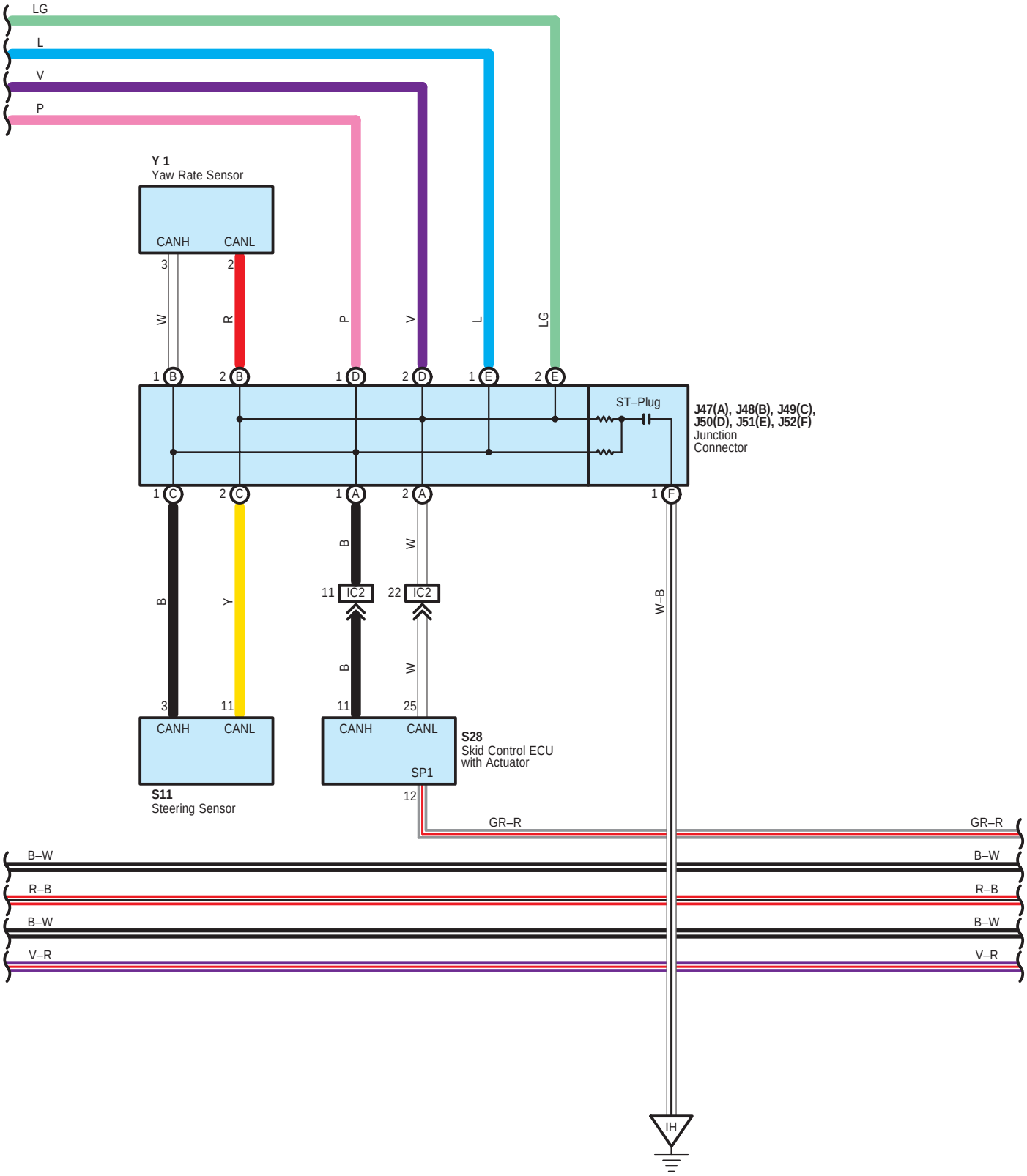
LG
L
V
P
Y 1
Yaw Rate Sensor
CANH
CANL
3
2
W
R
P
V
L
LG
1 B
2 B
1 D
2 D
1 E
2 E
ST–Plug
J47(A), J48(B), J49(C),
J50(D), J51(E), J52(F)
Junction
Connector
1 C
2 C
1 A
2 A
1 F
B
Y
B
W
11 IC2
22 IC2
W–B
B
W
3
11
11
25
CANH
CANL
CANH
CANL
SP1
S28
Skid Control ECU
with Actuator
S11
Steering Sensor
12
GR–R
GR–R
B–W
B–W
R–B
R–B
B–W
B–W
V–R
V–R
IH

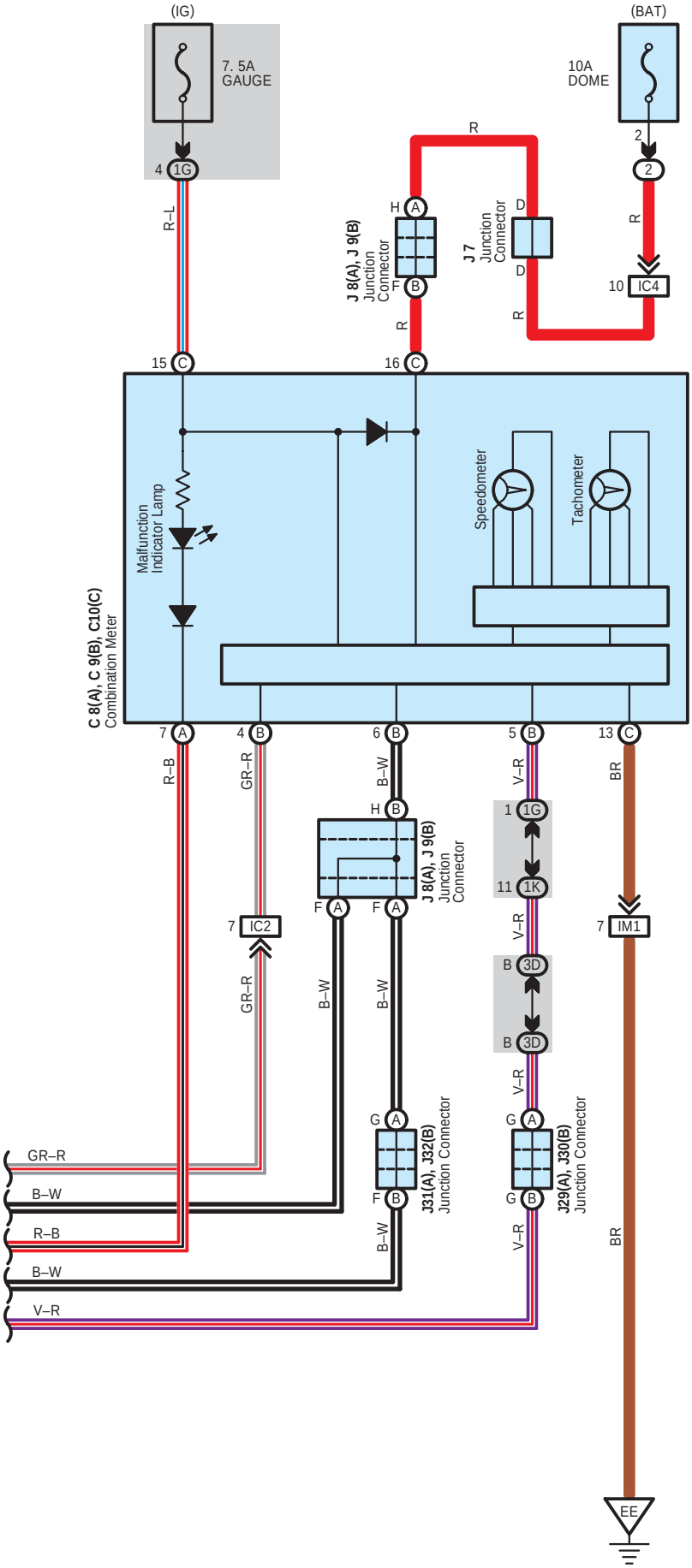
(IG)
7. 5A
GAUGE
4 1G
R–L
(BAT)
10A
DOME
2
2
R
10 IC4
R
H A
F B
J 8(A), J 9(B)
Junction
Connector
R
D
D
J 7
Junction
Connector
R
15 C
16 C
C 8(A), C 9(B), C10(C)
Combination Meter
Malfunction
Indicator Lamp
Speedometer
Tachometer
7 A
4 B
6 B
5 B
13 C
R–B
GR–R
B–W
V–R
BR
H B
J 8(A), J 9(B)
Junction
Connector
1 1G
11 1K
V–R
7 IC2
GR–R
F A
F A
7 IM1
B 3D
B 3D
B–W
B–W
V–R
G A
G A
J31(A), J32(B)
Junction Connector
J29(A), J30(B)
Junction Connector
F B
G B
B–W
V–R
BR
GR–R
B–W
R–B
B–W
V–R
EE

System Outline

The engine control system utilizes a microcomputer and maintains overall control of the engine, transmission etc. An outline of the engine control is given here.

1. Input Signals

(1) Engine coolant temp. signal circuit

The engine coolant temp. sensor detects the engine coolant temp. and has a built–in thermistor with a resistance which varies according to the engine coolant temp. The engine coolant temp. is input into TERMINAL THW of the engine control module as a control signal.

(2) Intake air temp. signal circuit

The intake air temp. sensor is installed in the mass air flow meter and detects the intake air temp., which is input as a control signal to TERMINAL THA of the engine control module.

(3) Oxygen sensor signal circuit

The oxygen density in the exhaust emission is detected and is input as a control signal from the heated oxygen sensors to TERMINALS OX1B and OX2B of the engine control module.

(4) RPM signal circuit

The camshaft position is detected by the VVT sensor LH and RH, and is input into TERMINALS VV1+ and VV2+ of the engine control module as a control signal. Also, the engine RPM is detected by the crankshaft position sensor and the signal is input into TERMINAL NE+ of the engine control module.

(5) Throttle position sensor signal circuit

The throttle position sensor detects the throttle valve opening angle as a control signal, which is input into TERMINALS VTA1 and VTA2 of the engine control module.

(6) Vehicle speed circuit

The vehicle speed sensor detects the vehicle speed, and the signal is input into TERMINAL SPD of the engine control module via the combination meter, from TERMINAL SP1 of the skid control ECU with actuator.

(7) Battery signal circuit

Voltage is constantly applied to TERMINAL BATT of the engine control module. When the ignition SW is turned on, the voltage for engine control module start up power supply is applied through the EFI relay, to TERMINALS +B and +B2 of the engine control module. The current from the IGN fuse flows to TERMINAL IGSW of the engine control module, and voltage is constantly applied to TERMINAL +BM.

(8) Intake air volume signal circuit

The intake air volume is detected by the mass air flow meter, and is input as a control signal to TERMINAL VG of the engine control module.

(9) Stop light SW signal circuit

The stop light SW is used to detect whether the vehicle is braking or not, and the signal is input into TERMINAL STP of the engine control module as a control signal.

(10) Starter signal circuit

To confirm whether the engine is cranking, the voltage applied to the starter motor when the engine is cranking is detected, and is input into TERMINAL STA of the engine control module as a control signal.

(11) Engine knock signal circuit

Engine knocking is detected by the knock sensors, and is input into TERMINALS KNK1 and KNK2 of the engine control module as a control signal.

(12) A/C SW signal system

The operating voltage of the A/C magnetic clutch is detected and input in the form of a control signal to TERMINAL AC1 of the engine control module.

(13) Air fuel ratio signal circuit

The air fuel ratio is detected and input as a control signal into TERMINALS A1A+ and A2A+ of the engine control module.

2. Control System

* SFI system
  The SFI system monitors the engine condition through the signals input from each sensors to the engine control module. The control signal is sent to the engine control module TERMINALS #10, #20, #30, #40, #50 and #60 to operate the injector (Fuel injection). The SFI system controls the fuel injection by the engine control module in response to the driving conditions.
* ESA system
  The ESA system monitors the engine condition through the signals input from each sensors to the engine control module. The best ignition timing is decided according to this data and the data memorized in the engine control module. The control signal is output to TERMINALS IGT1, IGT2, IGT3, IGT4, IGT5 and IGT6, and these signals control the igniter to provide the best ignition timing.
* Heated oxygen sensor heater control system
  The heated oxygen sensor heater control system turns the heater on when the intake air volume is low (Temp. of exhaust emission is low), and warms up the heated oxygen sensors to improve their detection performance. The engine control module evaluates the signals from each sensors, and outputs current to TERMINAL HT1B or HT2B to control the heater.
* Air fuel ratio sensor heater control system
  The air fuel ratio sensor heater control system turns the heater on when the intake air volume is low (Temp. of exhaust emission is low), and warms up the air fuel ratio sensor to improve detection performance of the sensor.
  The engine control module evaluates the signals from each sensor, current is output to TERMINALS HA1A and HA2A, controlling the heater.
* Fuel pump control system
  The engine control module supplies current to TERMINAL FPR, and controls the operation speed of the fuel pump with the FUEL PUMP relay.
* ACIS
  The ACIS includes a valve in the bulkhead separating the surge tank into two parts. This valve is opened and closed in accordance with the driving conditions to control the intake manifold length in two stages, for increased engine output in all ranges from low to high speeds.
* ETCS–i
  The ETCS–i controls the engine output at its optimal level in accordance with the opening of the accelerator pedal, under all driving conditions.
* Engine start control system
  The engine control module allows power to be supplied from the TERMINAL STAR/NSW to the STA relay via park/neutral position SW until complete combustion is confirmed by engine RPM after the detection of ignition SW ST signal by the TERMINAL STSW.
  With this arrangement, engine can be started without holding the ignition key in the ST position. At the same time, the TERMINAL ACCR is controlled so that the engine control module turns off ACC CUT relay, shutting off power to the accessories.
* VVT–i
  Controls the intake camshaft to an optimal valve timing in accordance with the engine condition.

3. Diagnosis System

When there is a malfunction in the engine control module signal system, the malfunctioning system is recorded in the memory. The malfunctioning system can be found by reading the code displayed on the malfunction indicator lamp.

4. Fail–Safe System

When a malfunction has occurred in any system, there is a possibility of causing engine trouble due to continued control based on that system. In that case, the fail–safe system either controls the system using the data (Standard values) recorded in the engine control module memory, or else stops the engine.

: Parts Location

Code	See Page	Code	See Page	Code	See Page
A11	34 (1GR–FE)	I3	35 (1GR–FE)	J34 B	38
A12	34 (1GR–FE)	I4	35 (1GR–FE)	J37	38
A13	34 (1GR–FE)	I5	35 (1GR–FE)	J40 A	40
A16 A	36	I6	35 (1GR–FE)	J41 B	40
A17 B	36	I9	35 (1GR–FE)	J47 A	38
A24	36	I10	35 (1GR–FE)	J48 B	38
A32	36	I11	35 (1GR–FE)	J49 C	38
C2	34 (1GR–FE)	I12	35 (1GR–FE)	J50 D	38
C3	34 (1GR–FE)	I13	35 (1GR–FE)	J51 E	38
C4 A	34 (1GR–FE)	I14	35 (1GR–FE)	J52 F	38
C8 A	37	I18	37	K1	35 (1GR–FE)
C9 B	37	J2 A	35 (1GR–FE)	K2 A	35 (1GR–FE)
C10 C	37	J3 B	35 (1GR–FE)	L4	40
D1	37	J4	38	M1 A	35 (1GR–FE)
E2	34 (1GR–FE)	J5	38	P1	35 (1GR–FE)
E4 A	37	J7	38	P2	35 (1GR–FE)
E5 B	37	J8 A	38	S11	39
E6 C	37	J9 B	38	S12	39
E7 D	37	J16	38	S28	35 (1GR–FE)
E8 E	37	J18	38	T2	35 (1GR–FE)
F8	34 (1GR–FE)	J22	38	T8	39
F9 A	37	J27	38	V1 A	35 (1GR–FE)
F10 B	37	J28	38	V2 A	35 (1GR–FE)
F14	40	J29 A	38	V3 A	35 (1GR–FE)
H6	34 (1GR–FE)	J30 B	38	V4 A	35 (1GR–FE)
H8	34 (1GR–FE)	J31 A	38	Y1	39
I1	35 (1GR–FE)	J32 B	38		
I2	35 (1GR–FE)	J33 A	38		

: Relay Blocks

Code	See Page	Relay Blocks (Relay Block Location)
2	22	Engine Room R/B (Engine Compartment Left)

: Junction Block and Wire Harness Connector

Code	See Page	Junction Block and Wire Harness (Connector Location)
1C	24	Engine Room Main Wire and Driver Side J/B (Lower Finish Panel)
1D		
1E		
1G	25	Instrument Panel Wire and Driver Side J/B (Lower Finish Panel)
1H		
1J		
1K		
1L		
3C	28	Instrument Panel Wire and Center J/B (Instrument Panel Brace RH)
3D		
3E		

: Connector Joining Wire Harness and Wire Harness

Code	See Page	Joining Wire Harness and Wire Harness (Connector Location)
EC1	45 (1GR–FE)	Engine Wire and Differential Wire (Near the Front Differential)
ED1	45 (1GR–FE)	Engine Wire and Sensor Wire (Rear Side of Right Bank Cylinder Block)
IB1	46	Floor No.2 Wire and Engine Room Main Wire (Left Kick Panel)
IB2		
IC2	46	Instrument Panel Wire and Engine Room Main Wire (Left Kick Panel)
IC3		
IC4		
IE1	46	Instrument Panel Wire and Floor No.2 Wire (Left Kick Panel)
IK1	47	Instrument Panel Wire and Instrument Panel Wire (Left Upper Side of the Glove Box)
IL1	47	Instrument Panel Wire and Instrument Panel Wire (Right Upper Side of the Glove Box)
IM1	47	Engine Wire and Instrument Panel Wire (Right Side of Blower Unit)
IM2		

: Ground Points

Code	See Page	Ground Points Location
EB	45 (1GR–FE)	Front Left Fender
EE	45 (1GR–FE)	Rear Side of Right Bank Cylinder Block
EF	45 (1GR–FE)	Rear Side of Left Bank Cylinder Block
IG	46	Left Kick Panel
IH	46	Instrument Panel Brace LH
IK	46	Right Kick Panel
BL	48	Floor Seat Crossmember LH
BO	48	Rear Pillar LH

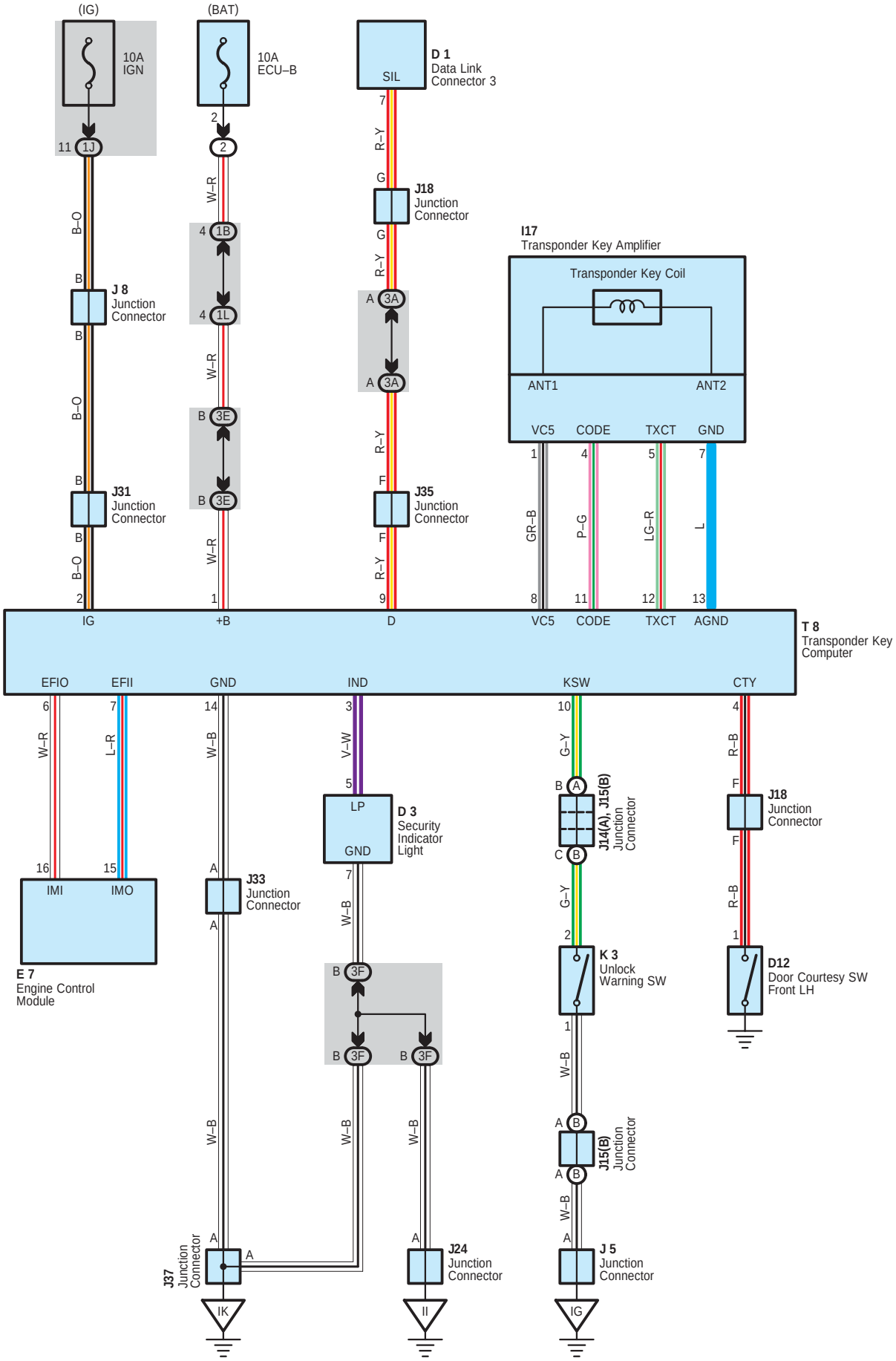
(IG)
10A
IGN
11
1J
B–O
B
J 8
Junction
Connector
B
B–O
B
J31
Junction
Connector
B
B–O
2
IG
(BAT)
10A
ECU–B
2
2
W–R
4
1B
4
1L
W–R
B
3E
B
3E
W–R
1
+B
D 1
Data Link
Connector 3
SIL
7
R–Y
G
J18
Junction
Connector
G
R–Y
A
3A
A
3A
R–Y
F
J35
Junction
Connector
F
R–Y
9
D
I17
Transponder Key Amplifier
Transponder Key Coil
ANT1
ANT2
VC5
CODE
TXCT
GND
1
4
5
7
GR–B
P–G
LG–R
L
8
11
12
13
VC5
CODE
TXCT
AGND
T 8
Transponder Key
Computer
EFIO
EFII
GND
IND
KSW
CTY
6
7
14
3
10
4
W–R
L–R
W–B
V–W
G–Y
R–B
16
15
IMI
IMO
E 7
Engine Control
Module
A
J33
Junction
Connector
A
5
LP
GND
D 3
Security
Indicator
Light
7
W–B
B
3F
B
3F
B
3F
W–B
W–B
W–B
A
A
J37
Junction
Connector
IK
A
J24
Junction
Connector
II
B
A
J14(A), J15(B)
Junction
Connector
C
B
G–Y
2
K 3
Unlock
Warning SW
1
W–B
A
B
J15(B)
Junction
Connector
A
B
W–B
A
J 5
Junction
Connector
IG
F
J18
Junction
Connector
F
R–B
1
D12
Door Courtesy SW
Front LH

: Parts Location

Code	See Page	Code	See Page	Code	See Page
D1	37	J8	38	J33	38
D3	37	J14 A	38	J35	38
D12	40	J15 B	38	J37	38
E7	37	J18	38	K3	39
I17	37	J24	38	T8	39
J5	38	J31	38		

: Relay Blocks

Code	See Page	Relay Blocks (Relay Block Location)
2	22	Engine Room R/B (Engine Compartment Left)

: Junction Block and Wire Harness Connector

Code	See Page	Junction Block and Wire Harness (Connector Location)
1B	24	Engine Room Main Wire and Driver Side J/B (Lower Finish Panel)
1J	25	Instrument Panel Wire and Driver Side J/B (Lower Finish Panel)
1L		
3A	28	Instrument Panel Wire and Center J/B (Instrument Panel Brace RH)
3E		
3F		

: Ground Points

Code	See Page	Ground Points Location
IG	46	Left Kick Panel
II	46	Instrument Panel Brace RH
IK	46	Right Kick Panel

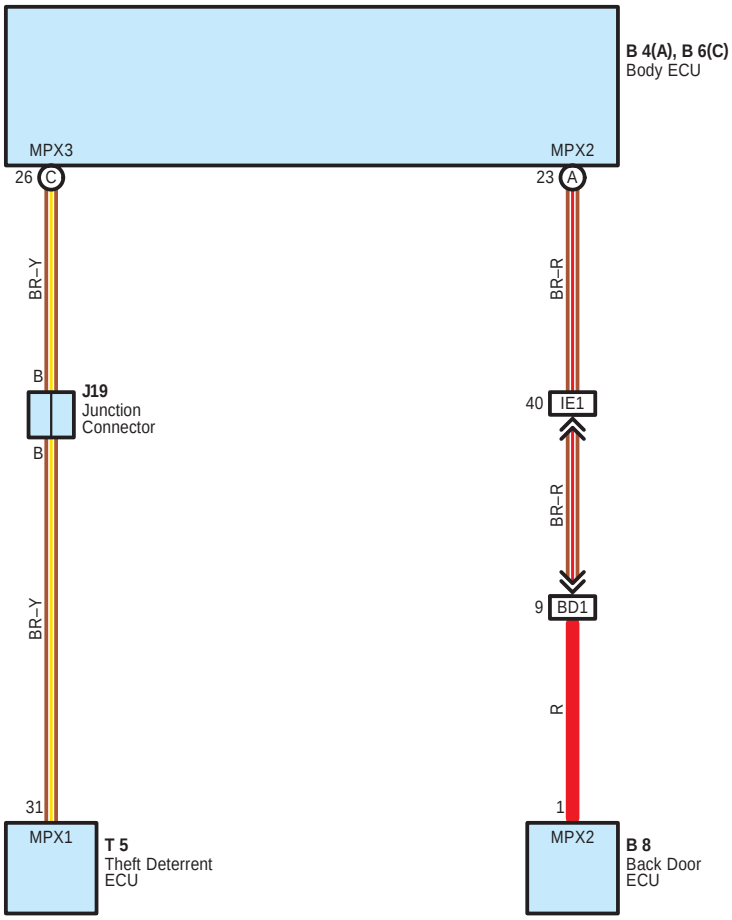
B 4(A), B 6(C)
Body ECU
MPX3
MPX2
26
C
23
A
BR–Y
BR–R
B
J19
Junction
Connector
B
40
IE1
BR–R
9
BD1
BR–Y
R
31
1
MPX1
T 5
Theft Deterrent
ECU
MPX2
B 8
Back Door
ECU

Multiplex Communication System Includes Following Systems

- **Automatic Light Control**
- **Door Lock Control**
- **Front Fog Light**
- **Garage Door Opener**
- **Headlight**
- **Interior Light**
- **Key Reminder**
- **Light Auto Turn Off System**
- **Mirror Heater**
- **Power Window**
- **Rear Window Defogger**
- **Rear Wiper and Washer**
- **Seat Belt Warning**
- **Theft Deterrent**
- **Wireless Door Lock Control**

○ **: Parts Location**

Code		See Page	Code	See Page	Code	See Page
B4	A	36	B8	40	T5	39
B6	C	36	J19	38		

▭ **: Connector Joining Wire Harness and Wire Harness**

Code	See Page	Joining Wire Harness and Wire Harness (Connector Location)
IE1	46	Instrument Panel Wire and Floor No.2 Wire (Left Kick Panel)
BD1	48	Back Door No.1 Wire and Floor No.2 Wire (Left Rear Side of Roof)

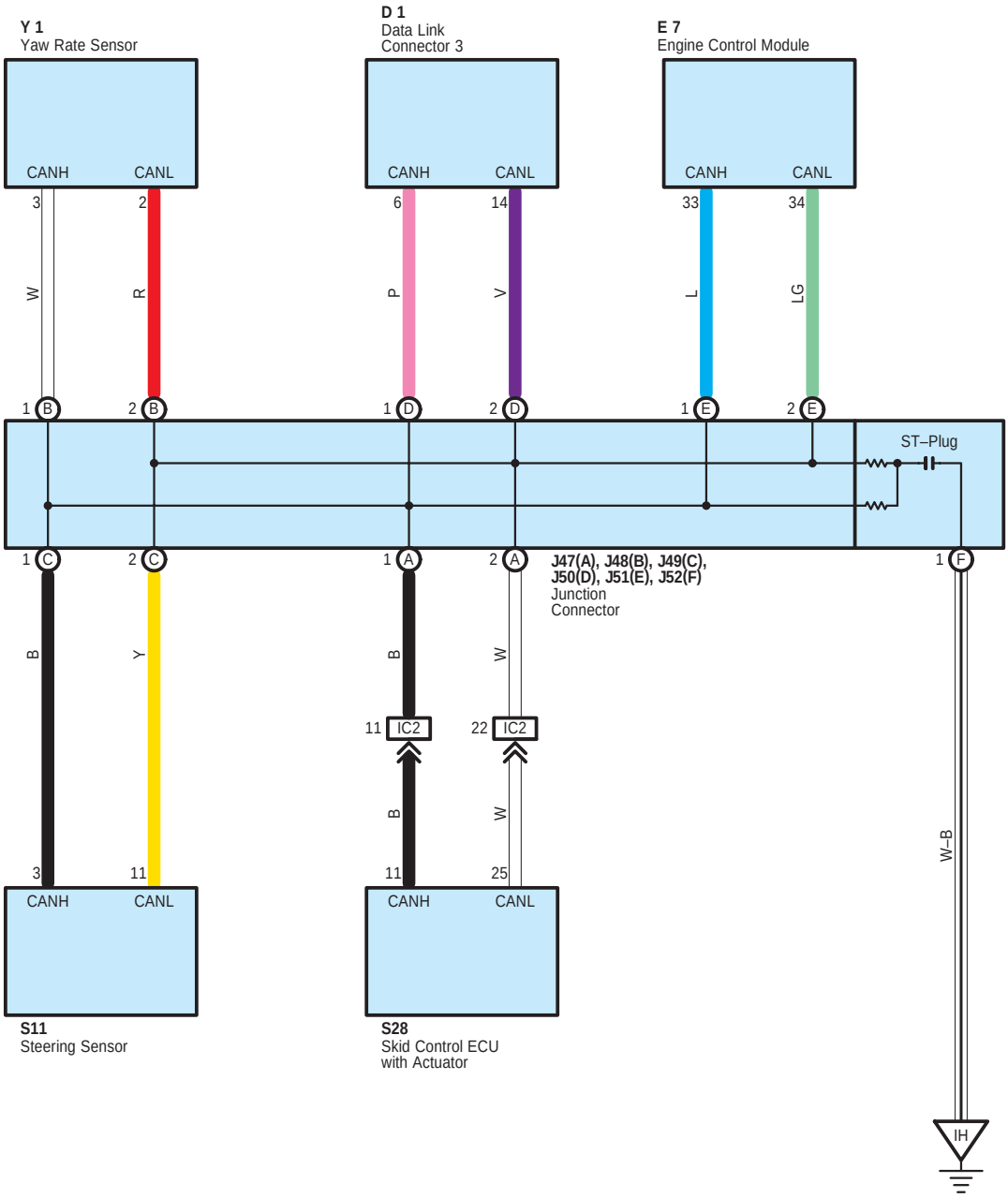
Y 1
Yaw Rate Sensor
D 1
Data Link
Connector 3
E 7
Engine Control Module
CANH
CANL
3
2
6
14
33
34
W
R
P
V
L
LG
1 B
2 B
1 D
2 D
1 E
2 E
ST–Plug
1 C
2 C
1 A
2 A
1 F
J47(A), J48(B), J49(C),
J50(D), J51(E), J52(F)
Junction
Connector
B
Y
B
W
11 IC2
22 IC2
W–B
IH
S11
Steering Sensor
S28
Skid Control ECU
with Actuator

System Outline

CAN has two lines as a pair which make communication with operating voltage. CAN has excellent data speed and error detecting capacity. It consists of vehicle control systems such as engine control module, data link connector 3, skid control ECU with actuator, steering sensor and yaw rate sensor.

This system is working for the following systems:
* ABS
* Auto LSD
* Cruise Control
* Downhill Assist Control
* Electronically Controlled Transmission and A/T Indicator
* Engine Control
* Hill–Start Assist Control
* TRAC
* VSC

: Parts Location

Code		See Page	Code		See Page	Code	See Page
D1		37	J49	C	38	S11	39
E7		37	J50	D	38	S28	33 (2UZ–FE)
J47	A	38	J51	E	38		35 (1GR–FE)
J48	B	38	J52	F	38	Y1	39

: Connector Joining Wire Harness and Wire Harness

Code	See Page	Joining Wire Harness and Wire Harness (Connector Location)
IC2	46	Instrument Panel Wire and Engine Room Main Wire (Left Kick Panel)

: Ground Points

Code	See Page	Ground Points Location
IH	46	Instrument Panel Brace LH

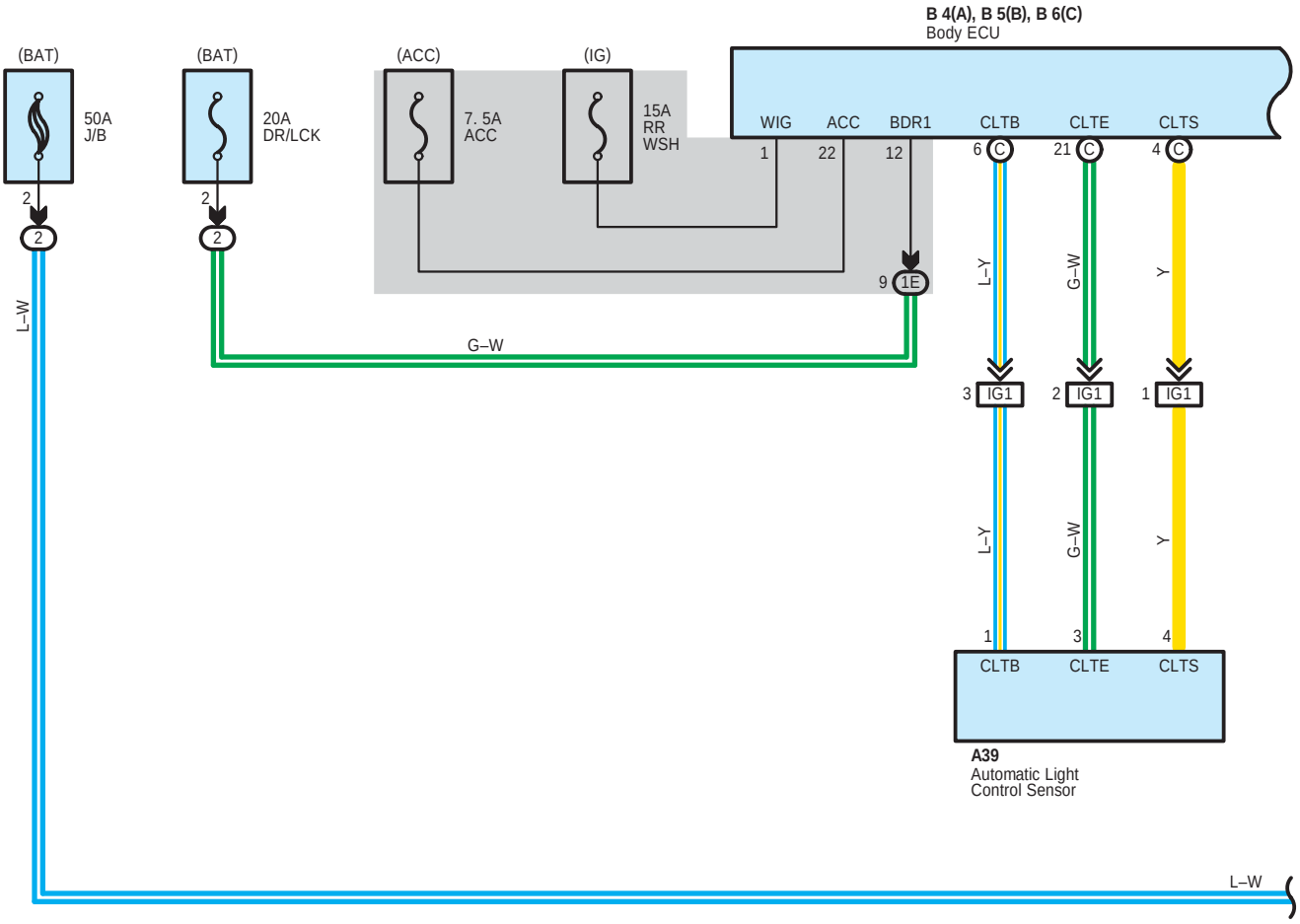
B 4(A), B 5(B), B 6(C)
Body ECU
(BAT)
50A
J/B
(BAT)
20A
DR/LCK
(ACC)
7. 5A
ACC
(IG)
15A
RR
WSH
WIG
ACC
BDR1
CLTB
CLTE
CLTS
1
22
12
6 C
21 C
4 C
9 1E
2
2
2
2
L–W
G–W
L–Y
G–W
Y
3 IG1
2 IG1
1 IG1
L–Y
G–W
Y
1
3
4
CLTB
CLTE
CLTS
A39
Automatic Light
Control Sensor
L–W

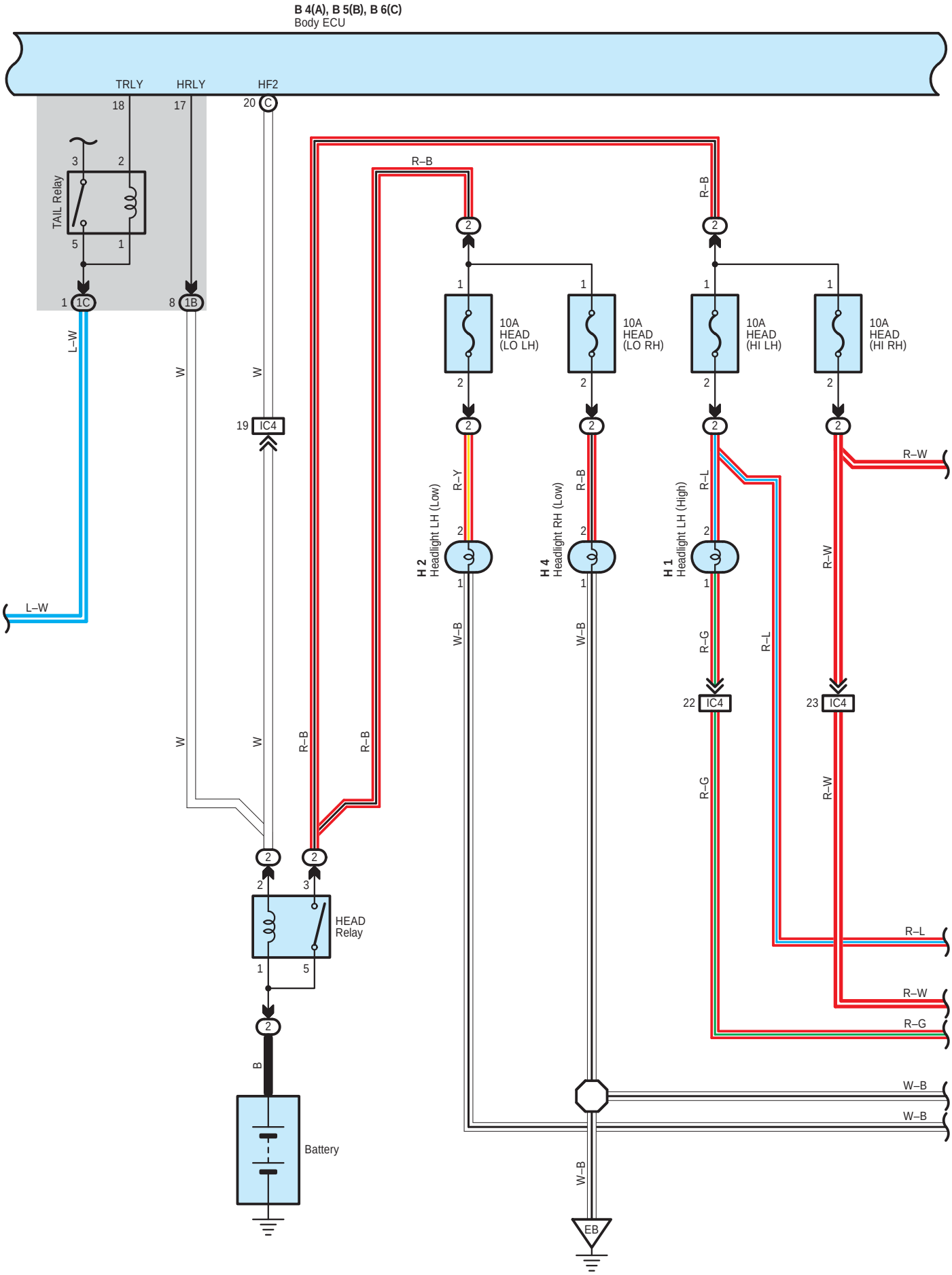
B 4(A), B 5(B), B 6(C)
Body ECU
TRLY
HRLY
HF2
18
17
20 C
TAIL Relay
3
2
5
1
1 1C
8 1B
L–W
W
19 IC4
R–B
10A
HEAD
(LO LH)
10A
HEAD
(LO RH)
10A
HEAD
(HI LH)
10A
HEAD
(HI RH)
H 2
Headlight LH (Low)
H 4
Headlight RH (Low)
H 1
Headlight LH (High)
R–Y
W–B
R–G
R–L
R–W
22 IC4
23 IC4
HEAD
Relay
B
Battery
EB

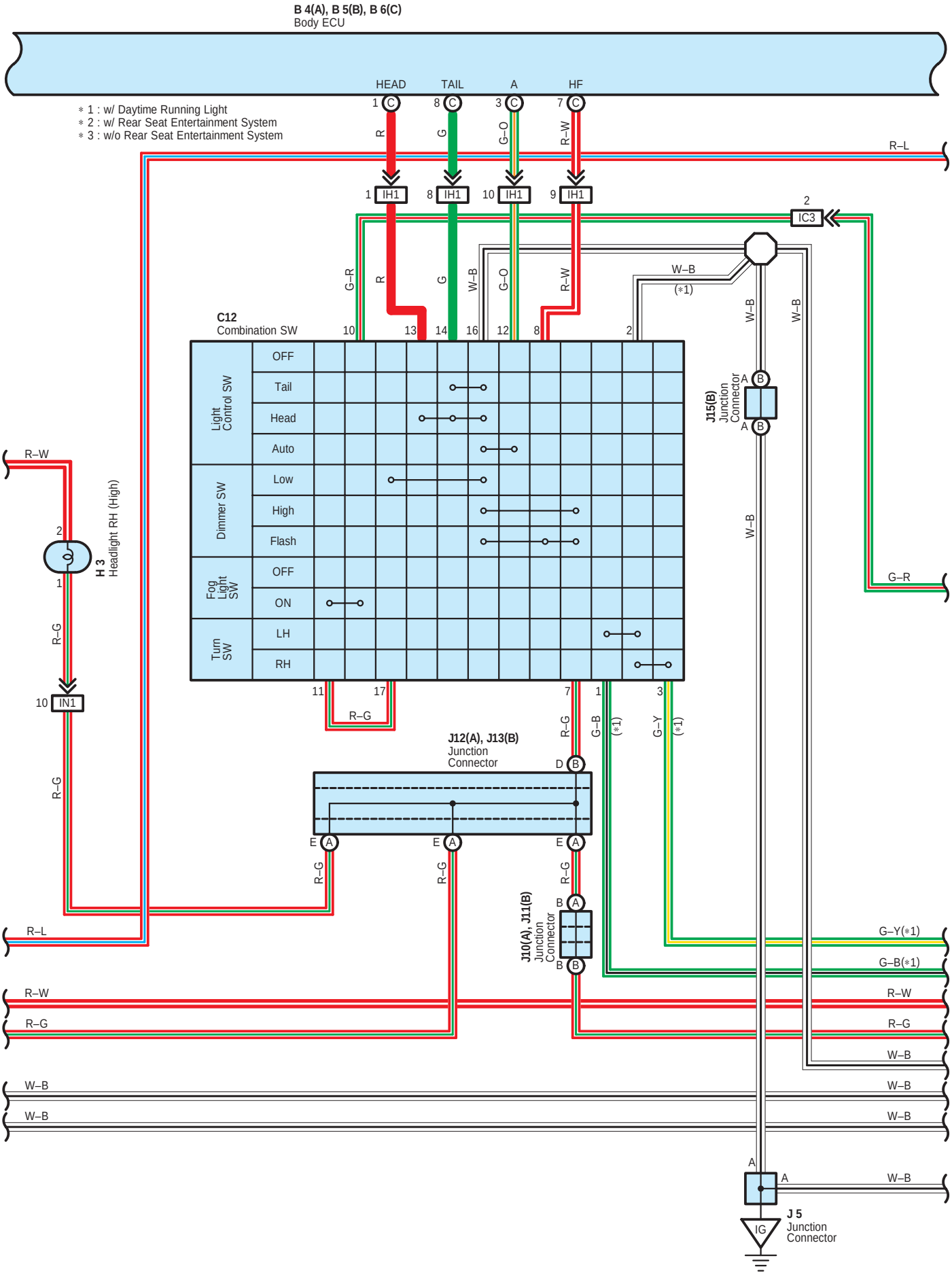
B 4(A), B 5(B), B 6(C)
Body ECU
HEAD
TAIL
A
HF
∗ 1 : w/ Daytime Running Light
∗ 2 : w/ Rear Seat Entertainment System
∗ 3 : w/o Rear Seat Entertainment System
R
G
G–O
R–W
R–L
IH1
IC3
G–R
W–B
(∗1)
C12
Combination SW
Light Control SW
OFF
Tail
Head
Auto
Dimmer SW
Low
High
Flash
Fog Light SW
OFF
ON
Turn SW
LH
RH
J15(B)
Junction Connector
R–W
H 3
Headlight RH (High)
R–G
IN1
J12(A), J13(B)
Junction Connector
G–B
G–Y
J10(A), J11(B)
Junction Connector
G–Y(∗1)
G–B(∗1)
W–B
J 5
Junction Connector
IG

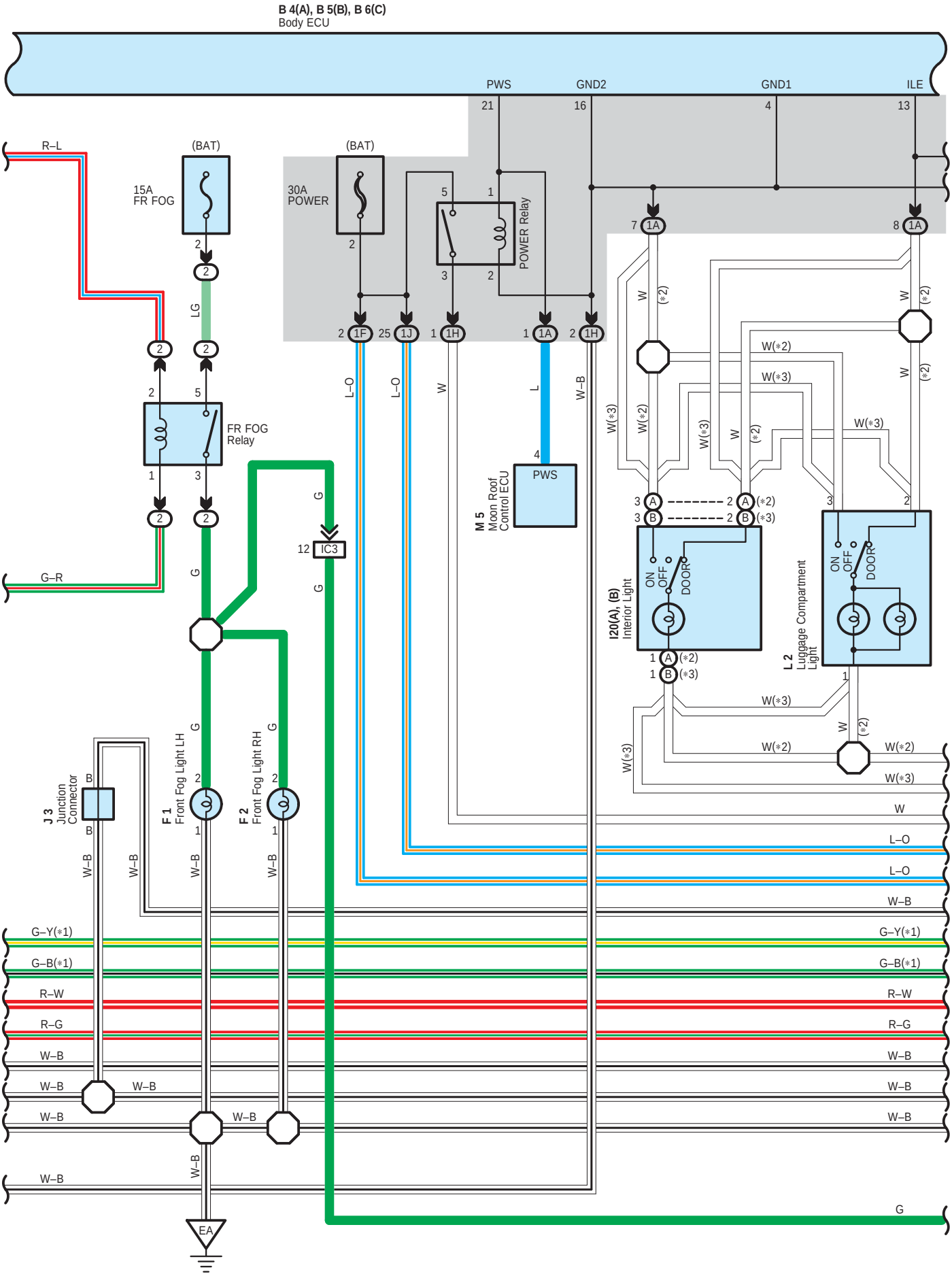
B 4(A), B 5(B), B 6(C)
Body ECU
PWS
GND2
GND1
ILE
21
16
4
13
R–L
(BAT)
15A
FR FOG
30A
POWER
POWER Relay
LG
FR FOG
Relay
G–R
G
IC3
12
L–O
W
L
W–B
PWS
M 5
Moon Roof
Control ECU
W(*3)
W(*2)
W
(*2)
W(*2)
W(*3)
I20(A), (B)
Interior Light
ON
OFF
DOOR
L 2
Luggage Compartment
Light
J 3
Junction
Connector
F 1
Front Fog Light LH
F 2
Front Fog Light RH
G–Y(*1)
G–B(*1)
R–W
R–G
W–B
EA

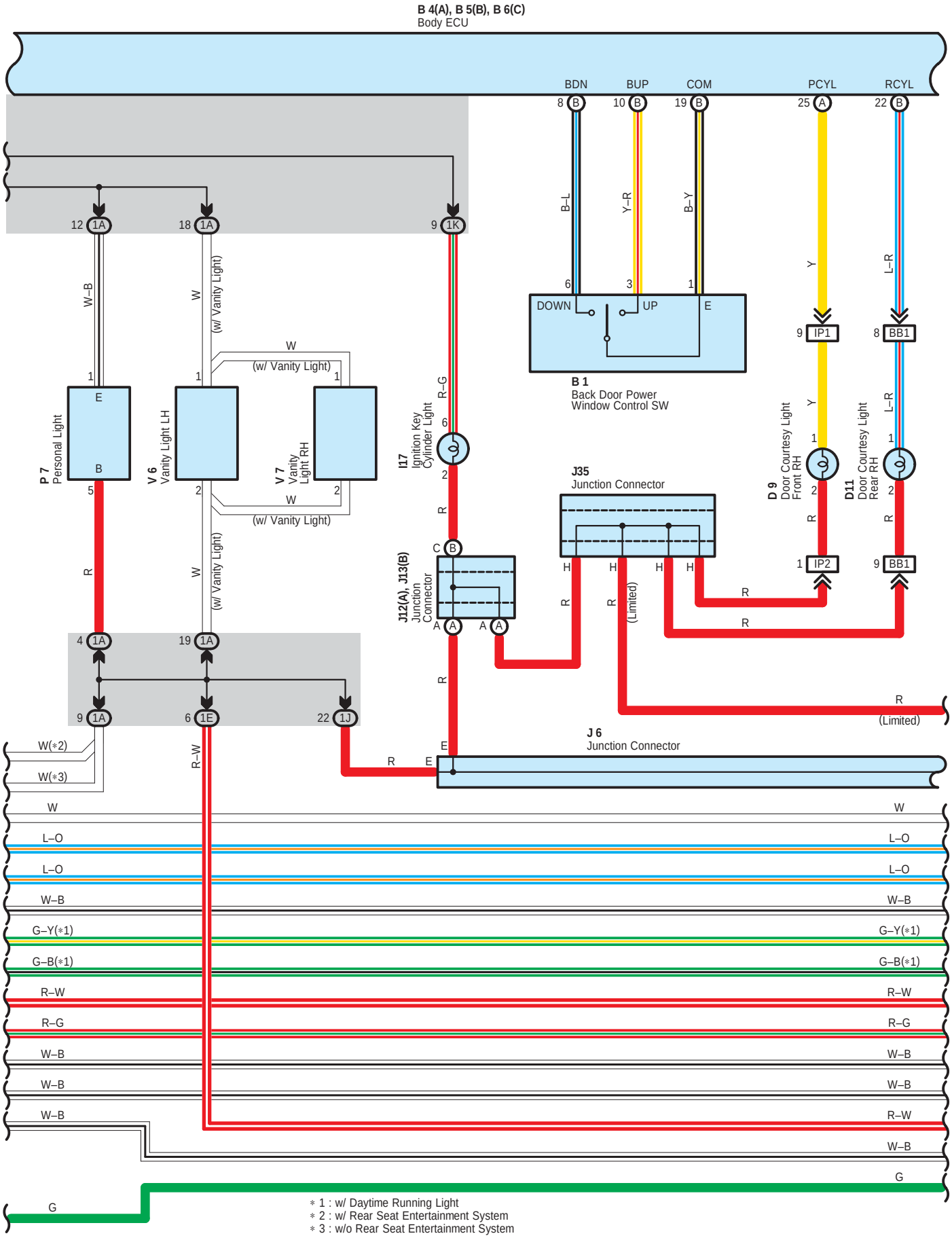
B 4(A), B 5(B), B 6(C)
Body ECU
BDN
BUP
COM
PCYL
RCYL
8 B
10 B
19 B
25 A
22 B
B–L
Y–R
B–Y
Y
L–R
6
3
1
DOWN
UP
E
B 1
Back Door Power Window Control SW
9 IP1
8 BB1
12 1A
18 1A
9 1K
W–B
W
(w/ Vanity Light)
P 7
Personal Light
V 6
Vanity Light LH
V 7
Vanity Light RH
I17
Ignition Key Cylinder Light
R–G
J35
Junction Connector
D 9
Door Courtesy Light Front RH
D11
Door Courtesy Light Rear RH
J12(A), J13(B)
Junction Connector
H
R
(Limited)
1 IP2
9 BB1
4 1A
19 1A
9 1A
6 1E
22 1J
J 6
Junction Connector
W(*2)
W(*3)
R–W
L–O
W–B
G–Y(*1)
G–B(*1)
R–G
G
* 1 : w/ Daytime Running Light
* 2 : w/ Rear Seat Entertainment System
* 3 : w/o Rear Seat Entertainment System

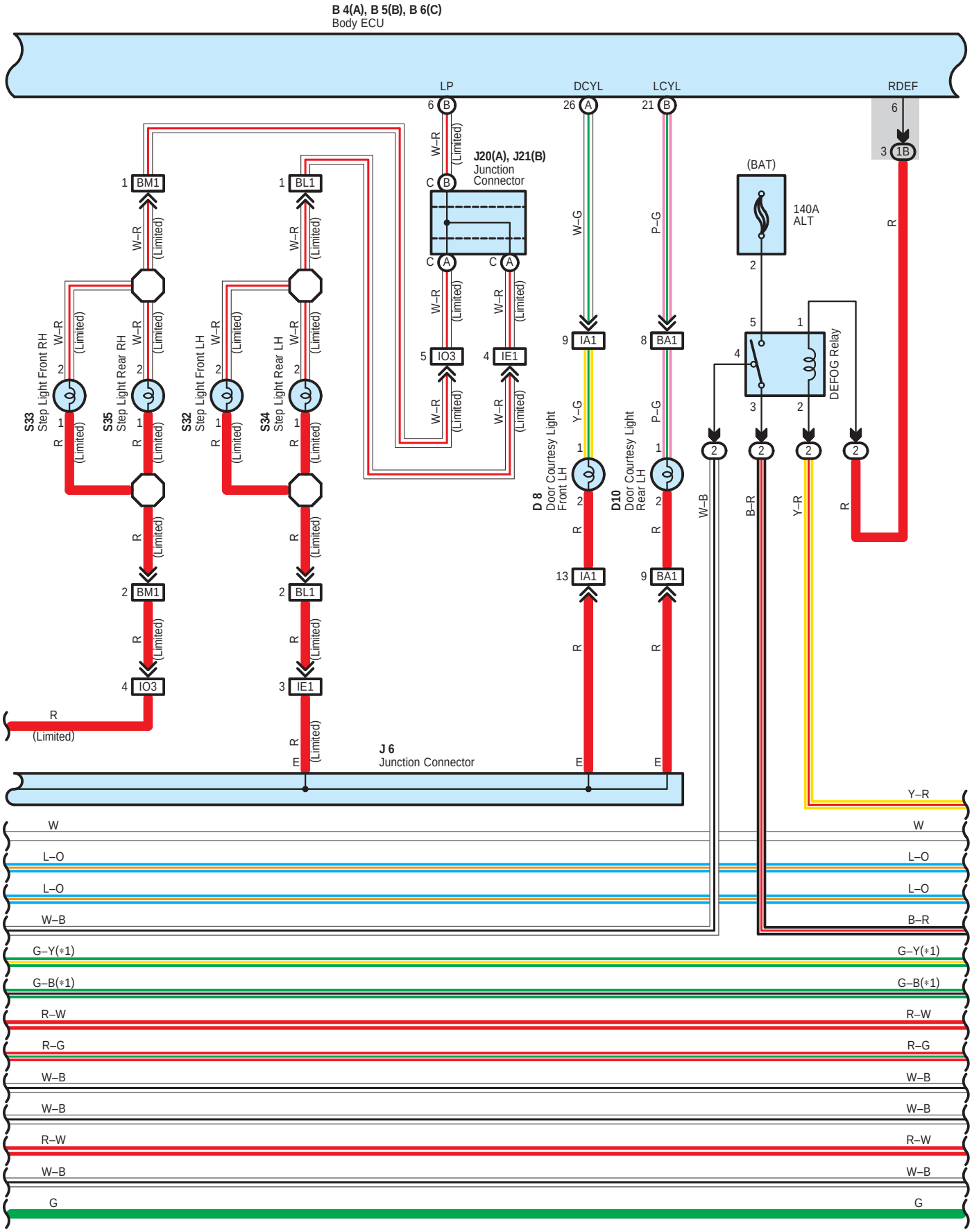
B 4(A), B 5(B), B 6(C)
Body ECU
LP
DCYL
LCYL
RDEF
J20(A), J21(B)
Junction Connector
(BAT)
140A
ALT
DEFOG Relay
S33
Step Light Front RH
S35
Step Light Rear RH
S32
Step Light Front LH
S34
Step Light Rear LH
D 8
Door Courtesy Light
Front LH
D10
Door Courtesy Light
Rear LH
J 6
Junction Connector
BM1
BL1
IO3
IE1
IA1
BA1
(Limited)
W–R
W–G
P–G
Y–G
W–B
B–R
Y–R
R
W
L–O
G–Y(*1)
G–B(*1)
R–W
R–G
G

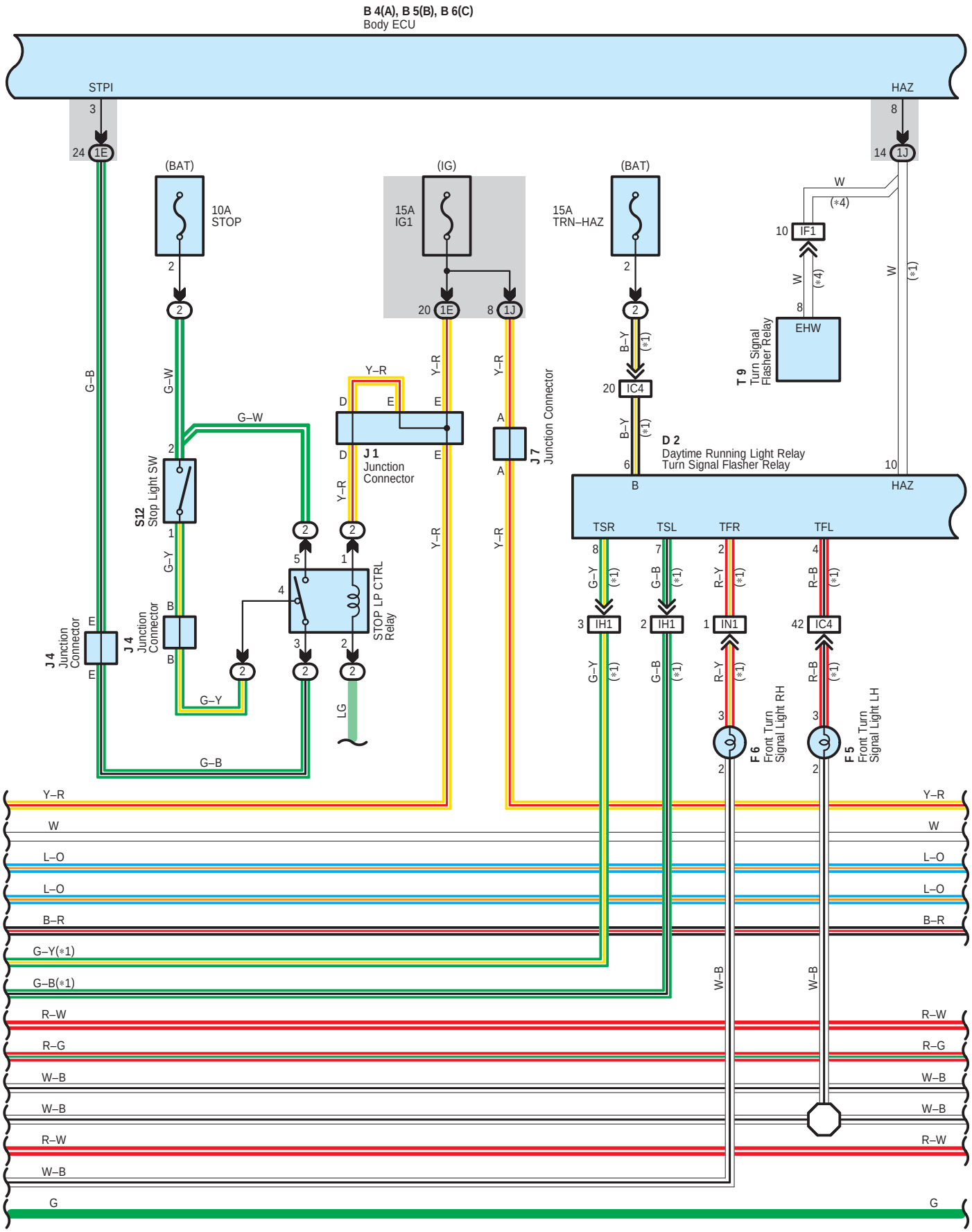
B 4(A), B 5(B), B 6(C)
Body ECU
STPI
HAZ
(BAT)
10A
STOP
(IG)
15A
IG1
(BAT)
15A
TRN–HAZ
W
(*4)
IF1
EHW
T 9
Turn Signal
Flasher Relay
S12
Stop Light SW
J 1
Junction
Connector
J 7
Junction Connector
D 2
Daytime Running Light Relay
Turn Signal Flasher Relay
J 4
Junction
Connector
STOP LP CTRL
Relay
IC4
IH1
IN1
F 6
Front Turn
Signal Light RH
F 5
Front Turn
Signal Light LH
TSR
TSL
TFR
TFL
G–B
G–W
G–Y
Y–R
B–Y
R–Y
R–B
LG
Y–R
W
L–O
L–O
B–R
G–Y(*1)
G–B(*1)
R–W
R–G
W–B
W–B
R–W
W–B
G

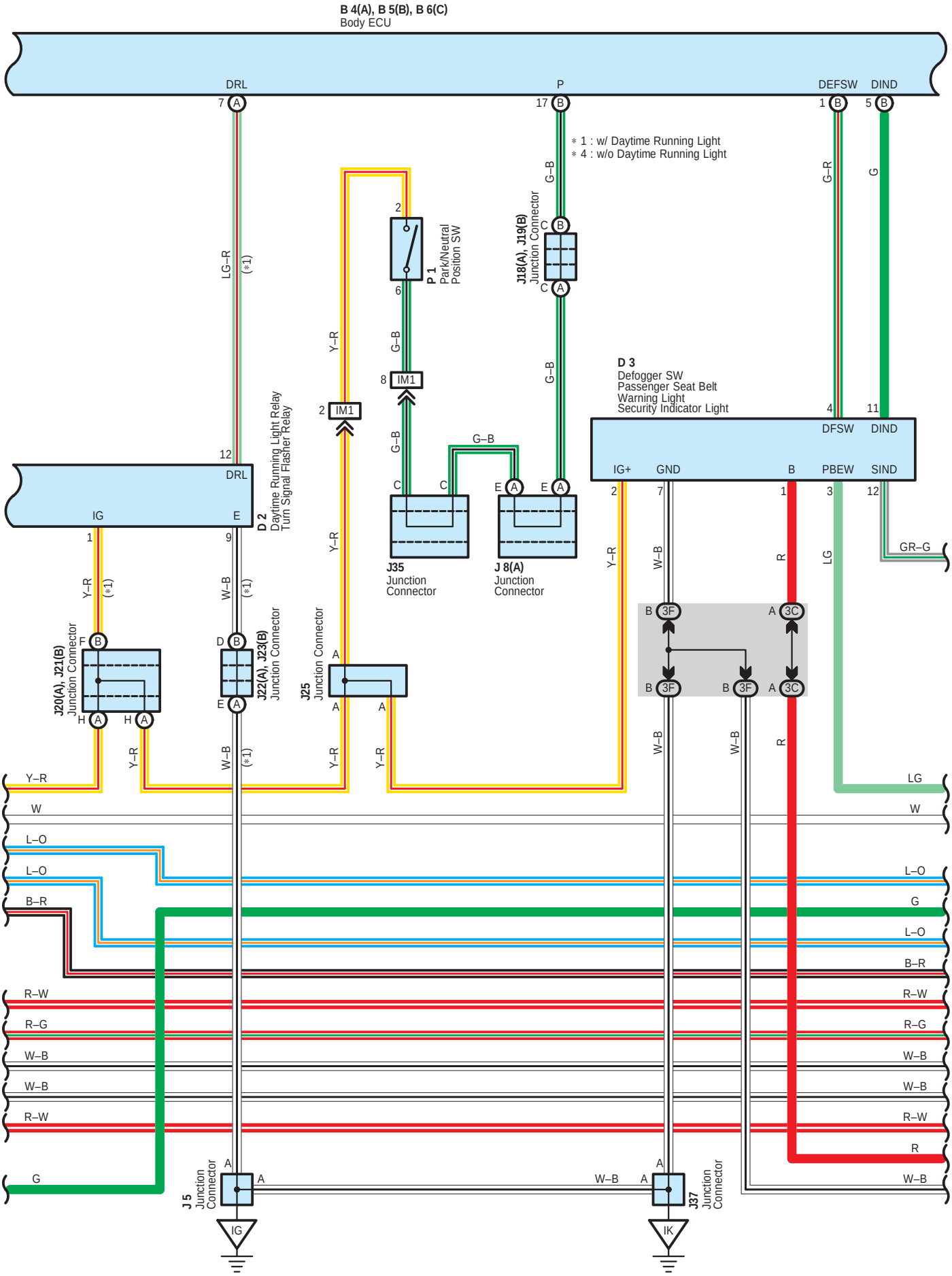
B 4(A), B 5(B), B 6(C)
Body ECU
DRL
P
DEFSW
DIND
7
17
1
5
∗ 1 : w/ Daytime Running Light
∗ 4 : w/o Daytime Running Light
LG–R
(∗1)
G–B
G–R
G
J18(A), J19(B)
Junction Connector
P 1
Park/Neutral
Position SW
2
6
8
IM1
Y–R
G–B
D 3
Defogger SW
Passenger Seat Belt
Warning Light
Security Indicator Light
DFSW
DIND
4
11
IG+
GND
B
PBEW
SIND
2
7
1
3
12
12
DRL
IG
E
1
9
D 2
Daytime Running Light Relay
Turn Signal Flasher Relay
J35
Junction
Connector
J 8(A)
Junction
Connector
GR–G
R
LG
W–B
J20(A), J21(B)
Junction Connector
J22(A), J23(B)
Junction Connector
J25
Junction Connector
3F
3C
Y–R
W
L–O
B–R
G
R–W
R–G
W–B
R
LG
J 5
Junction
Connector
IG
J37
Junction
Connector
IK

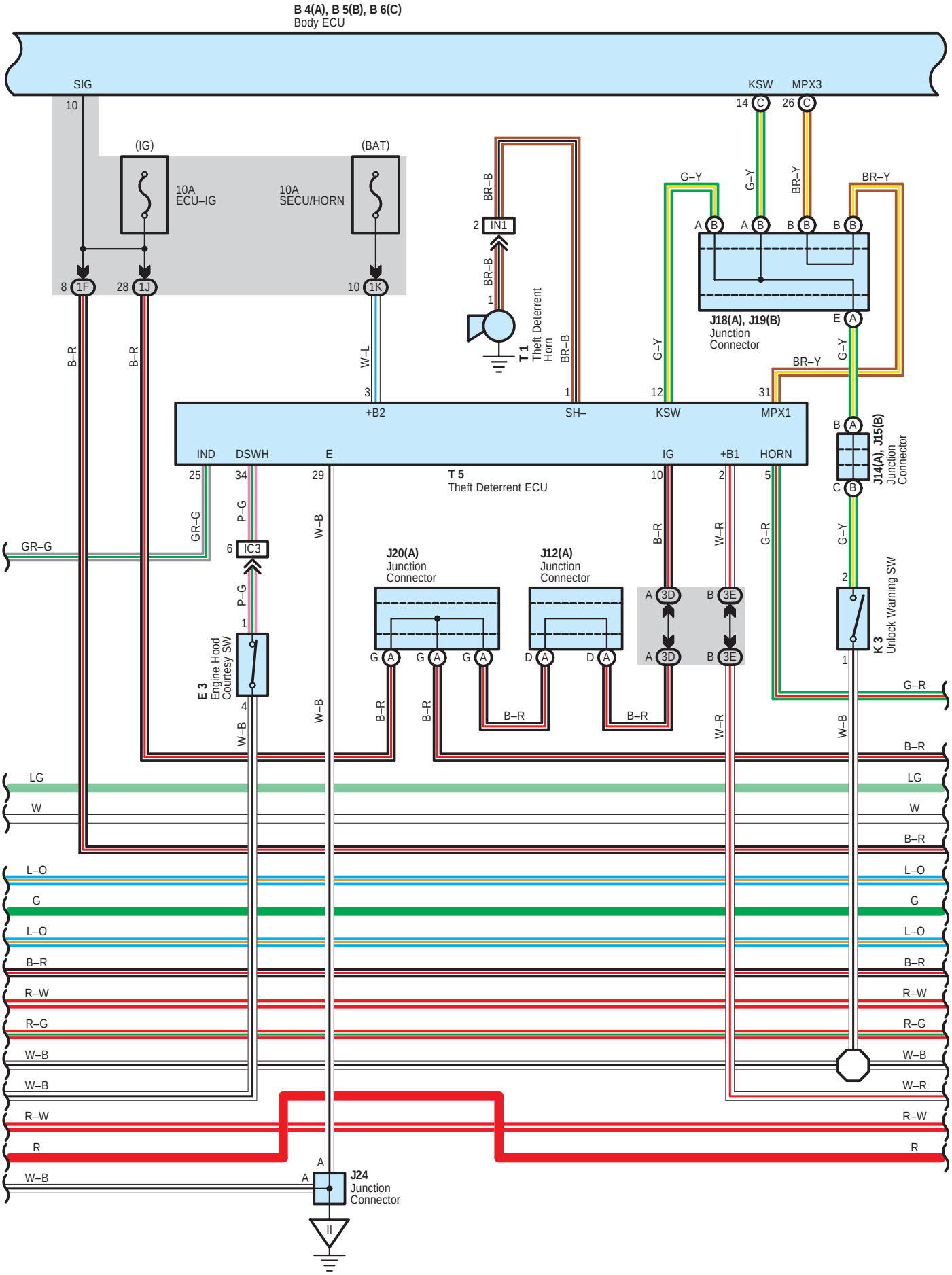
B 4(A), B 5(B), B 6(C)
Body ECU
SIG
10
(IG)
(BAT)
10A
ECU–IG
10A
SECU/HORN
8 1F
28 1J
10 1K
KSW
MPX3
14 C
26 C
BR–B
2 IN1
1
T 1
Theft Deterrent
Horn
BR–B
G–Y
BR–Y
J18(A), J19(B)
Junction
Connector
E A
B–R
W–L
3
1
12
31
+B2
SH–
KSW
MPX1
IND
DSWH
E
IG
+B1
HORN
T 5
Theft Deterrent ECU
25
34
29
10
2
5
GR–G
P–G
W–B
B–R
W–R
G–R
6 IC3
1
E 3
Engine Hood
Courtesy SW
4
J20(A)
Junction
Connector
J12(A)
Junction
Connector
3D
3E
B A
C B
J14(A), J15(B)
Junction
Connector
K 3
Unlock Warning SW
2
LG
W
L–O
G
R–W
R–G
W–B
R
J24
Junction
Connector

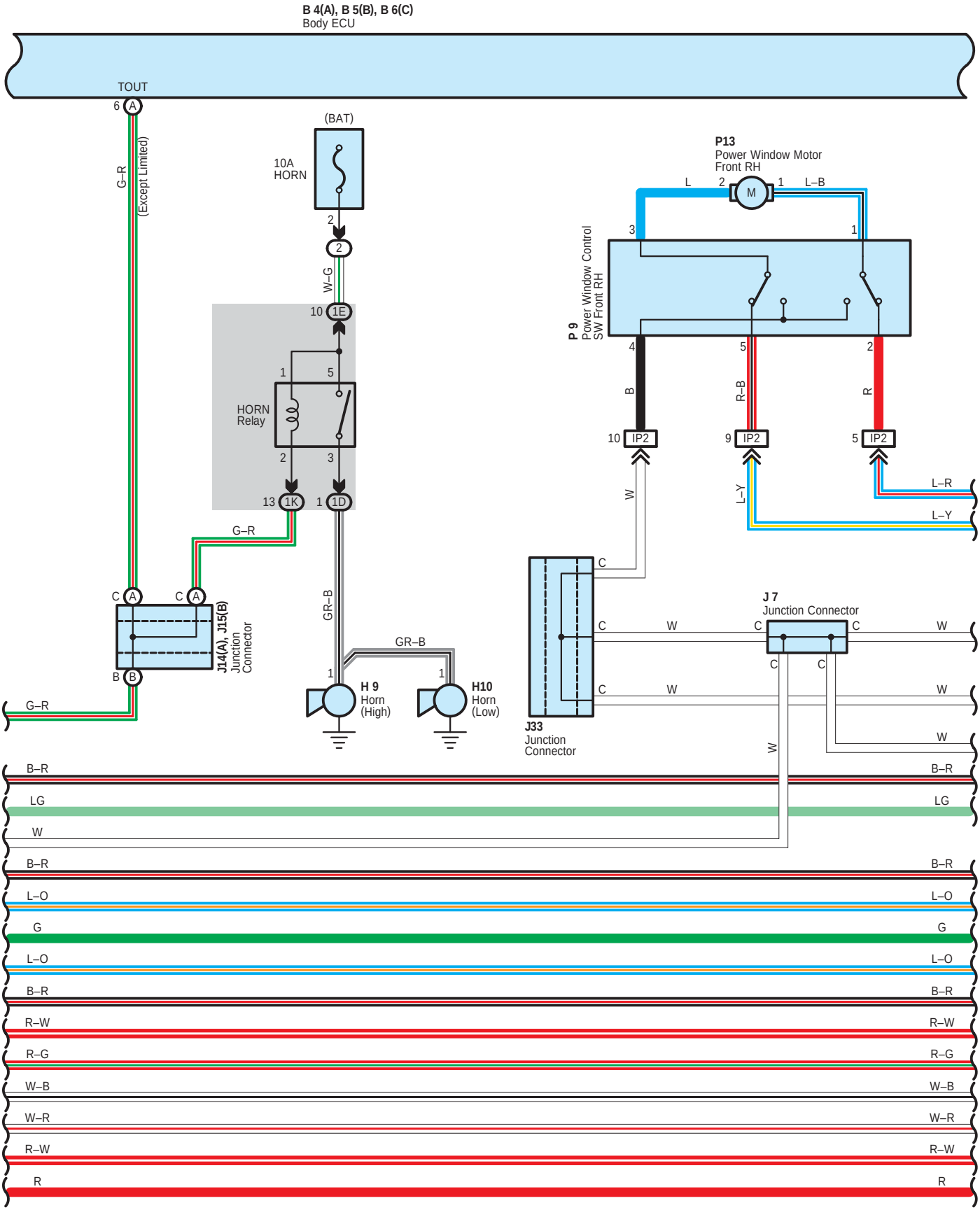
B 4(A), B 5(B), B 6(C)
Body ECU
TOUT
6 A
G–R
(Except Limited)
(BAT)
10A
HORN
2
2
W–G
10 1E
1
5
HORN
Relay
2
3
13 1K
1 1D
G–R
C A
C A
J14(A), J15(B)
Junction
Connector
B B
G–R
GR–B
GR–B
1
1
H 9
Horn
(High)
H10
Horn
(Low)
P13
Power Window Motor
Front RH
L
2
M
1
L–B
3
1
P 9
Power Window Control
SW Front RH
4
5
2
B
R–B
R
10 IP2
9 IP2
5 IP2
W
L–Y
L–R
L–Y
C
C
W
C
W
C
W
C
W
J33
Junction
Connector
J 7
Junction Connector
C
C
W
B–R
LG
W
B–R
L–O
G
L–O
B–R
R–W
R–G
W–B
W–R
R–W
R
B–R
LG
B–R
L–O
G
L–O
B–R
R–W
R–G
W–B
W–R
R–W
R

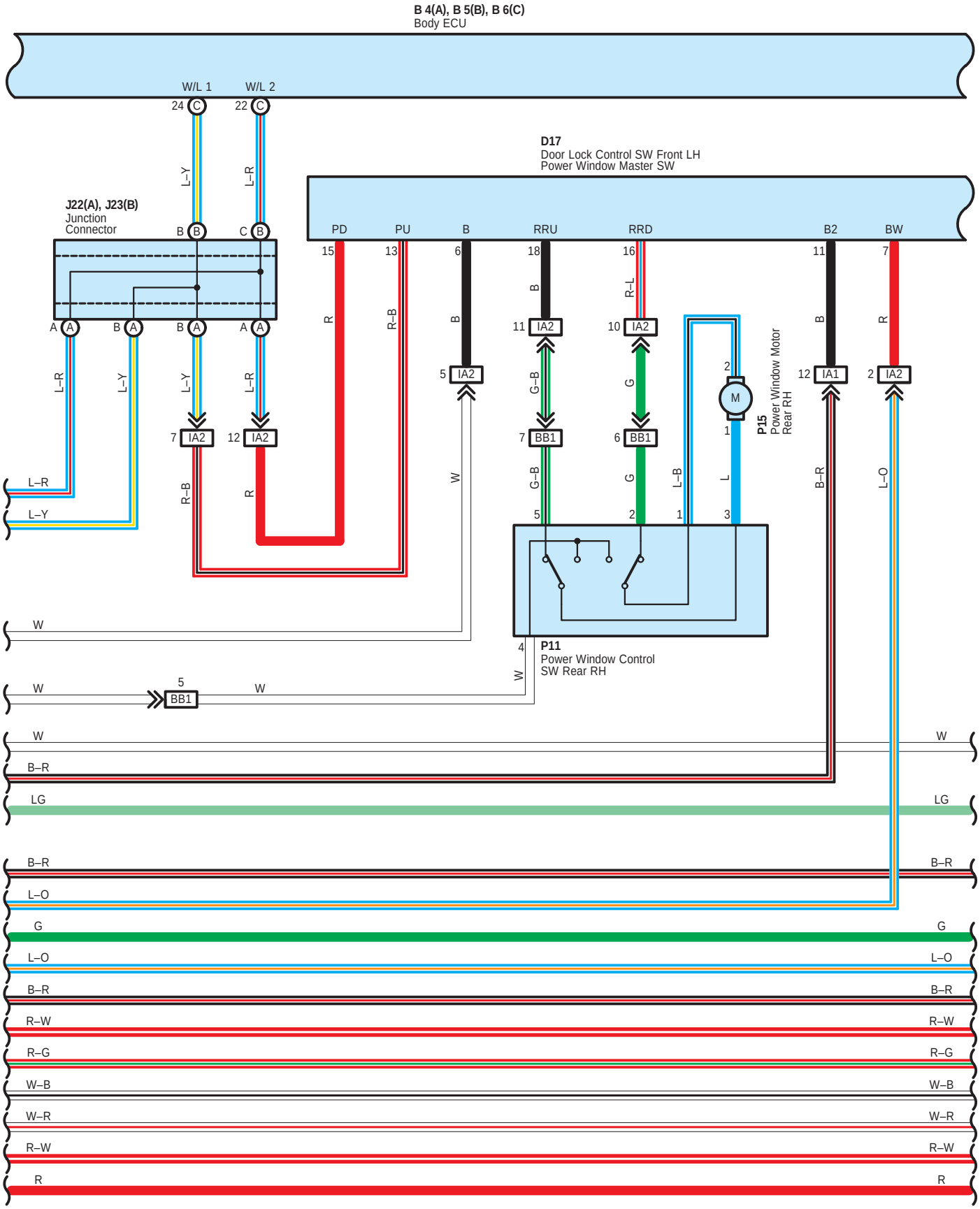
B 4(A), B 5(B), B 6(C)
Body ECU
W/L 1
W/L 2
24 C
22 C
L–Y
L–R
D17
Door Lock Control SW Front LH
Power Window Master SW
J22(A), J23(B)
Junction
Connector
B B
C B
PD
PU
B
RRU
RRD
B2
BW
15
13
6
18
16
11
7
R
R–B
B
B
R–L
B
R
A A
B A
B A
A A
L–R
L–Y
L–Y
L–R
5 IA2
11 IA2
10 IA2
12 IA1
2 IA2
7 IA2
12 IA2
G–B
G
7 BB1
6 BB1
L–B
L
2
M
1
P15
Power Window Motor
Rear RH
B–R
L–O
R–B
R
W
5 BB1
4
P11
Power Window Control
SW Rear RH
G–B
G
5
2
1
3
W
W
W
W
B–R
B–R
LG
LG
L–O
G
G
L–O
L–O
B–R
B–R
R–W
R–W
R–G
R–G
W–B
W–B
W–R
W–R
R–W
R–W
R
R

B 4(A), B 5(B), B 6(C)
Body ECU

D17
Door Lock Control SW Front LH
Power Window Master SW

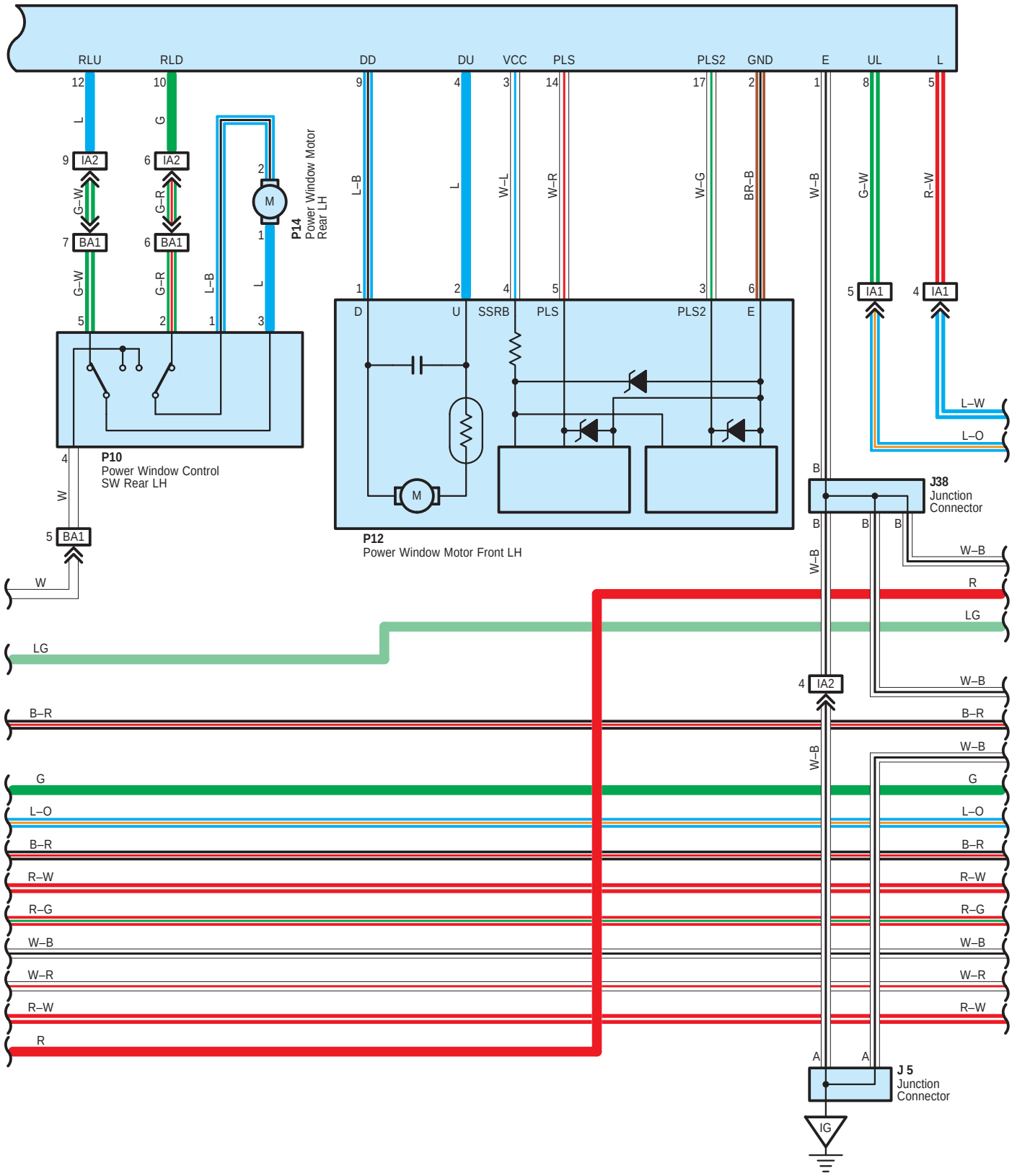

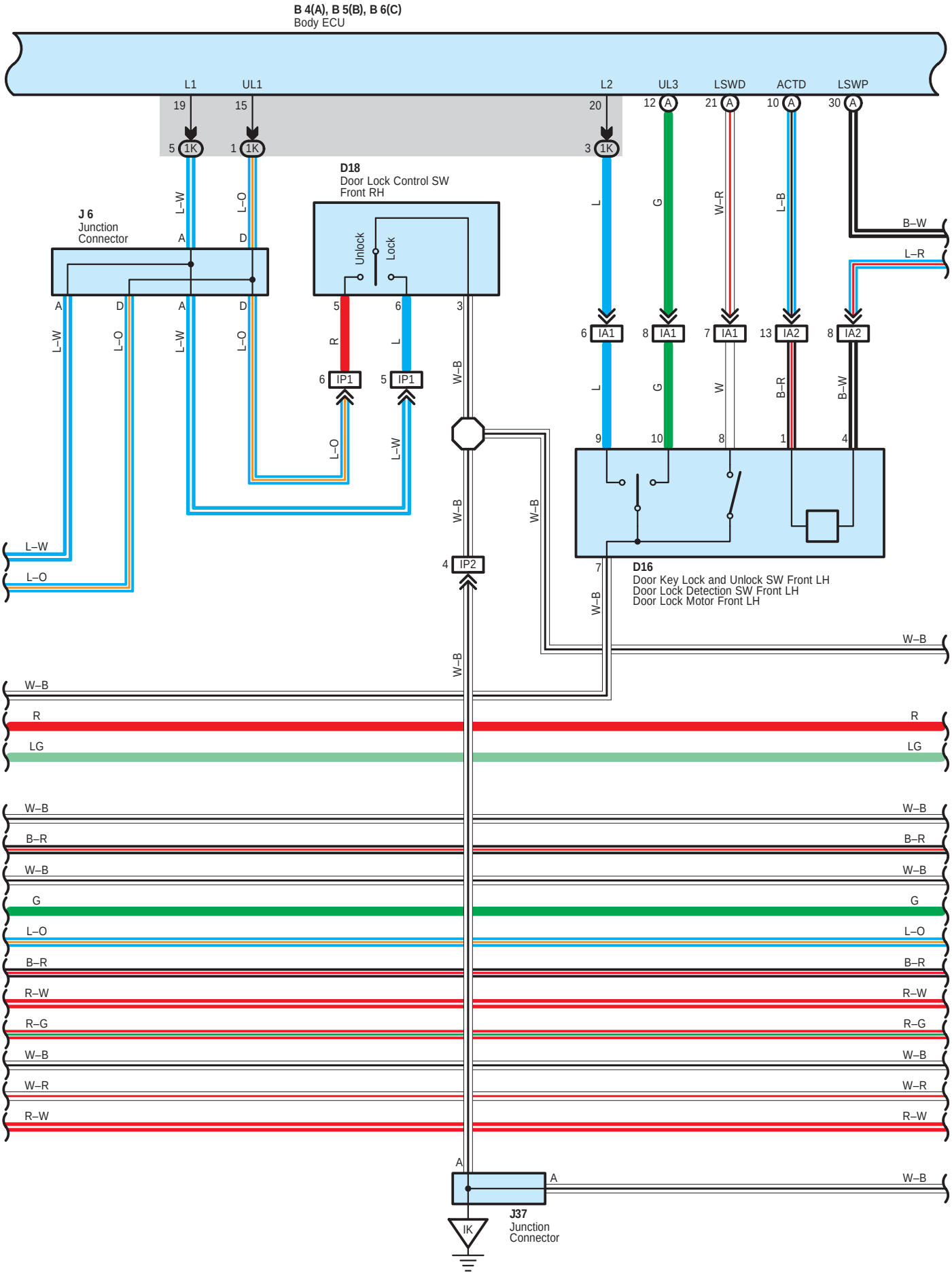
B 4(A), B 5(B), B 6(C)
Body ECU
L1
UL1
L2
UL3
LSWD
ACTD
LSWP
19
15
20
12 A
21 A
10 A
30 A
5 1K
1 1K
3 1K
D18
Door Lock Control SW
Front RH
Unlock
Lock
J 6
Junction
Connector
L–W
L–O
L
G
W–R
L–B
B–W
L–R
6 IA1
8 IA1
7 IA1
13 IA2
8 IA2
W
B–R
B–W
9
10
8
1
4
5 IP1
6 IP1
R
W–B
4 IP2
7
D16
Door Key Lock and Unlock SW Front LH
Door Lock Detection SW Front LH
Door Lock Motor Front LH
LG
B–R
R–W
R–G
A
J37
Junction
Connector
IK

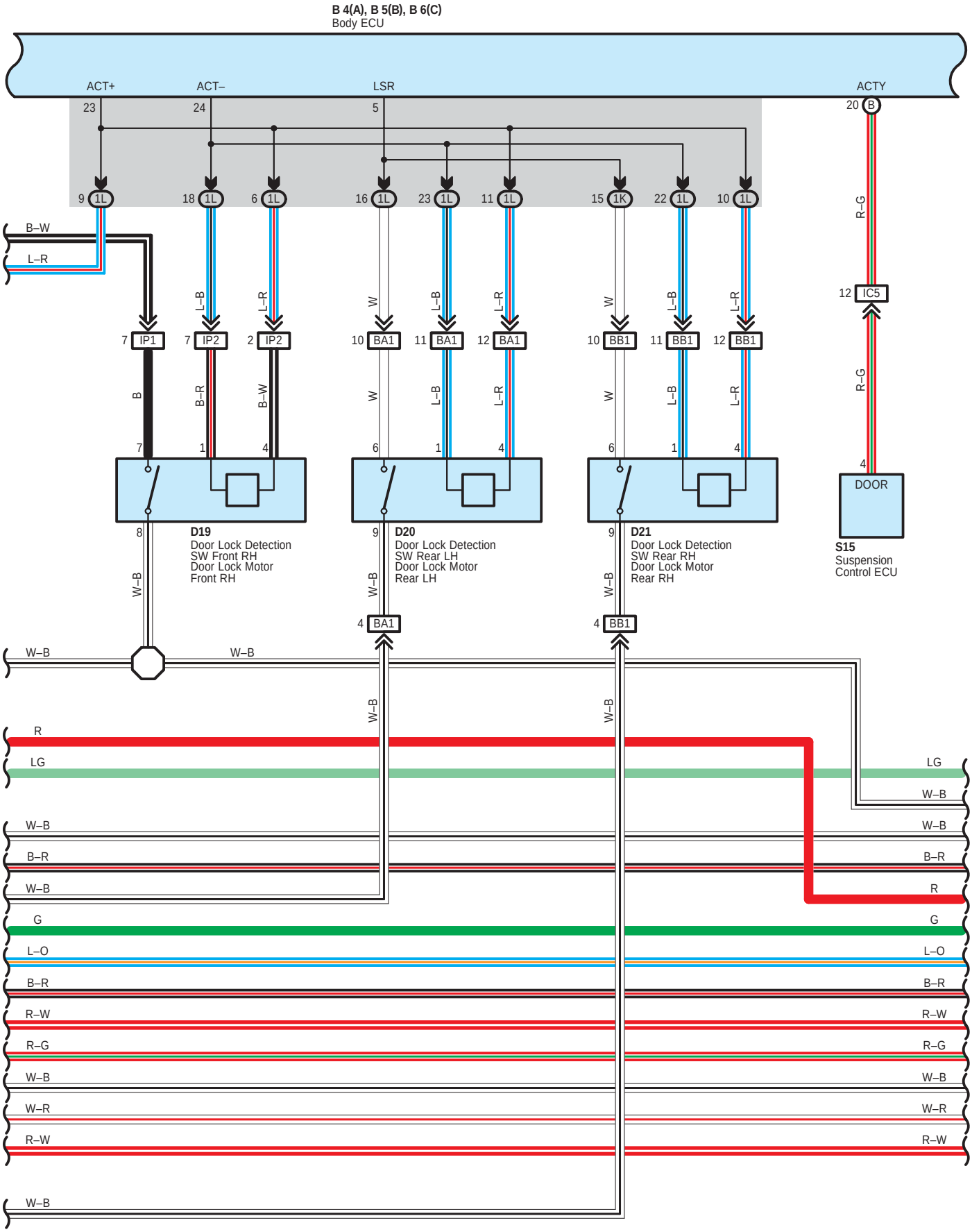
B 4(A), B 5(B), B 6(C)
Body ECU
ACT+
ACT–
LSR
ACTY
23
24
5
20 B
9 1L
18 1L
6 1L
16 1L
23 1L
11 1L
15 1K
22 1L
10 1L
R–G
12 IC5
B–W
L–R
L–B
L–R
W
L–B
L–R
W
L–B
L–R
7 IP1
7 IP2
2 IP2
10 BA1
11 BA1
12 BA1
10 BB1
11 BB1
12 BB1
B
B–R
B–W
W
L–B
L–R
W
L–B
L–R
R–G
7
1
4
6
1
4
6
1
4
4
DOOR
8
9
9
D19
Door Lock Detection
SW Front RH
Door Lock Motor
Front RH
D20
Door Lock Detection
SW Rear LH
Door Lock Motor
Rear LH
D21
Door Lock Detection
SW Rear RH
Door Lock Motor
Rear RH
S15
Suspension
Control ECU
W–B
W–B
W–B
W–B
4 BA1
4 BB1
W–B
W–B
R
LG
LG
W–B
W–B
W–B
B–R
B–R
W–B
R
G
G
L–O
L–O
B–R
B–R
R–W
R–W
R–G
R–G
W–B
W–B
W–R
W–R
R–W
R–W
W–B

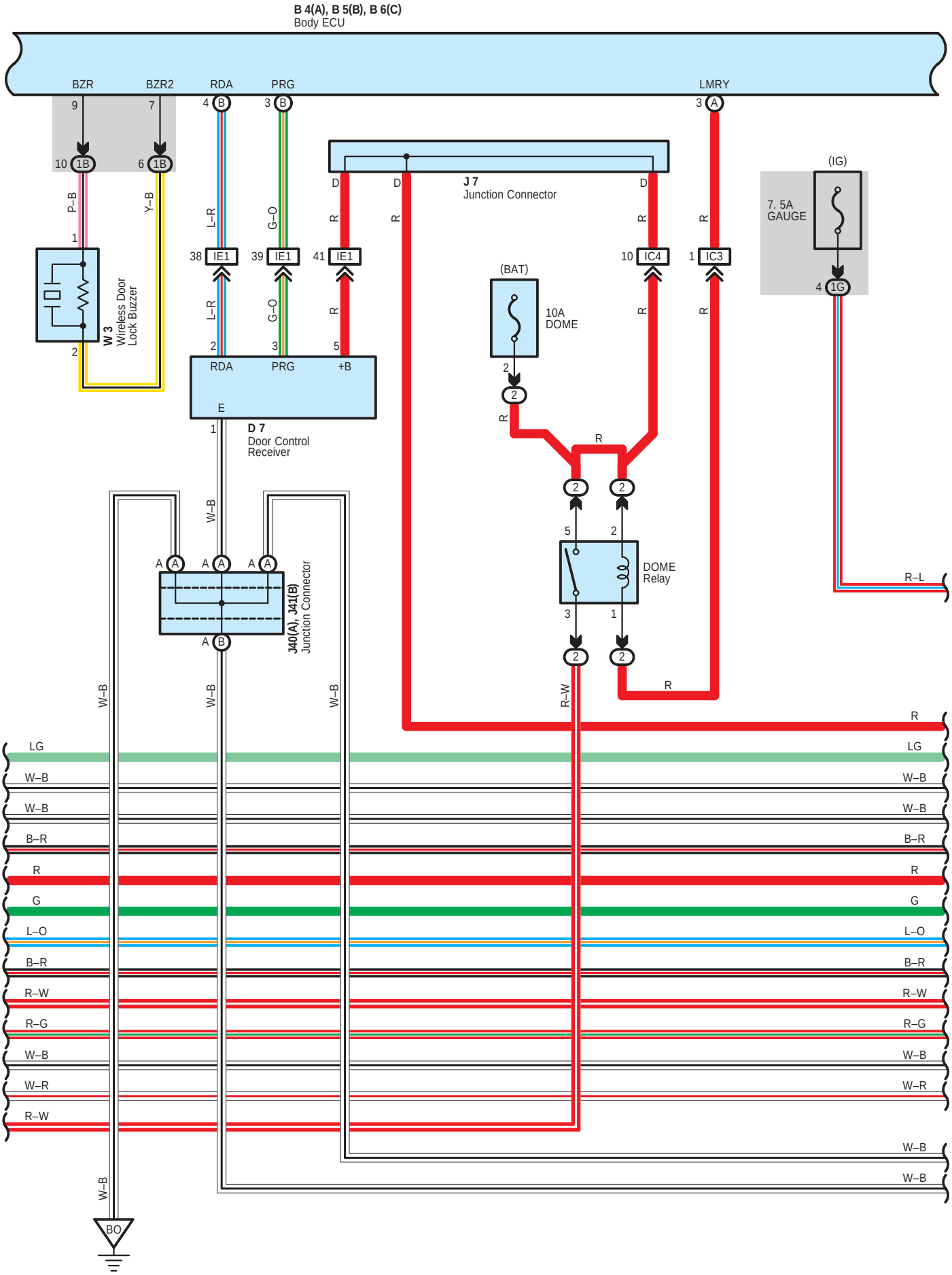
B 4(A), B 5(B), B 6(C)
Body ECU
BZR
BZR2
RDA
PRG
LMRY
W 3
Wireless Door Lock Buzzer
D 7
Door Control Receiver
J 7
Junction Connector
(BAT)
10A DOME
DOME Relay
(IG)
7. 5A GAUGE
J40(A), J41(B)
Junction Connector
BO

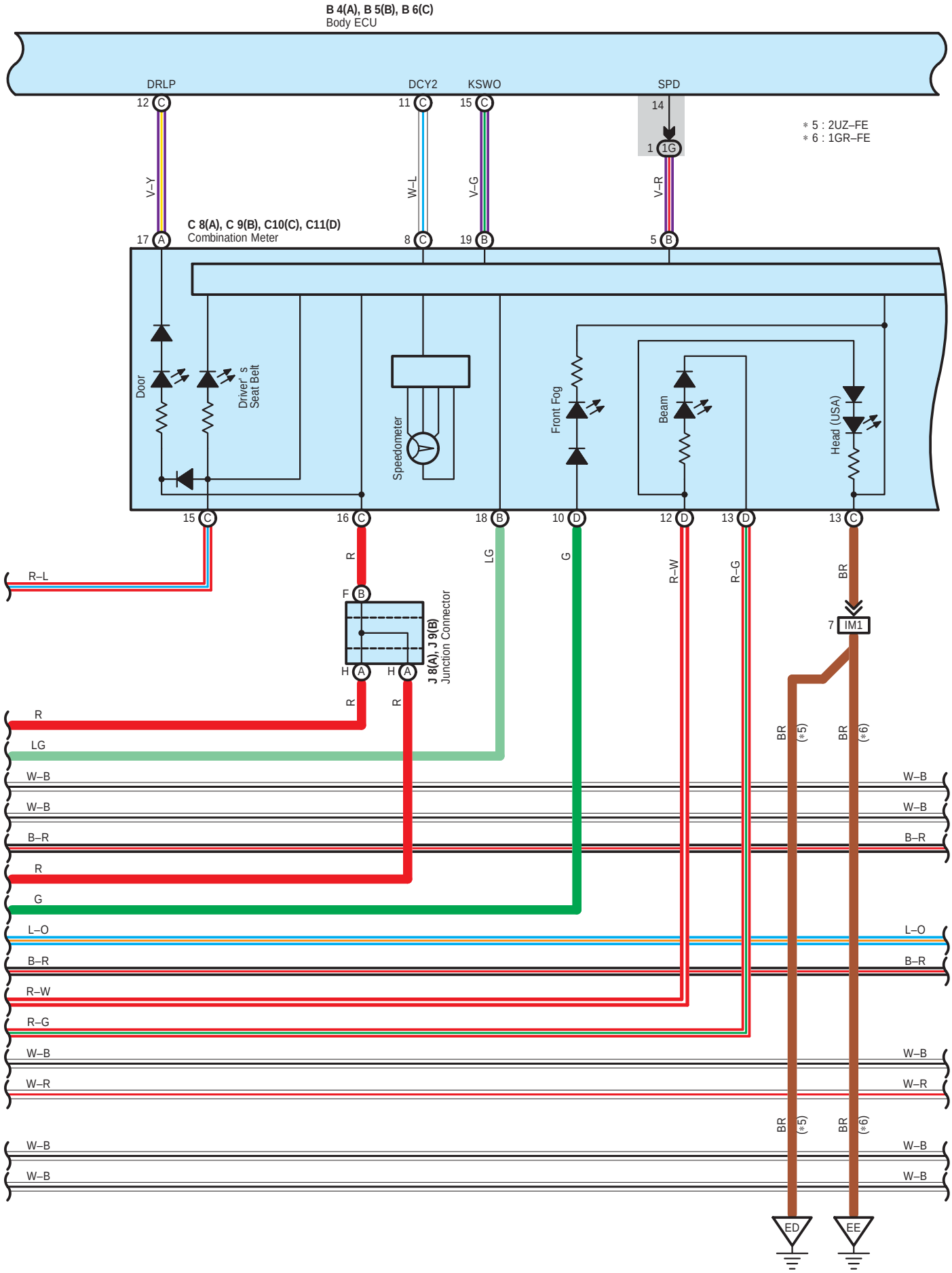
B 4(A), B 5(B), B 6(C)
Body ECU
DRLP
DCY2
KSWO
SPD
12 C
11 C
15 C
14
1 1G
* 5 : 2UZ–FE
* 6 : 1GR–FE
V–Y
W–L
V–G
V–R
C 8(A), C 9(B), C10(C), C11(D)
Combination Meter
17 A
8 C
19 B
5 B
Door
Driver's Seat Belt
Speedometer
Front Fog
Beam
Head (USA)
15 C
16 C
18 B
10 D
12 D
13 D
13 C
R–L
R
LG
G
R–W
R–G
BR
F B
H A
H A
J 8(A), J 9(B)
Junction Connector
7 IM1
BR (*5)
BR (*6)
R
LG
W–B
W–B
B–R
R
G
L–O
B–R
R–W
R–G
W–B
W–R
W–B
W–B
ED
EE

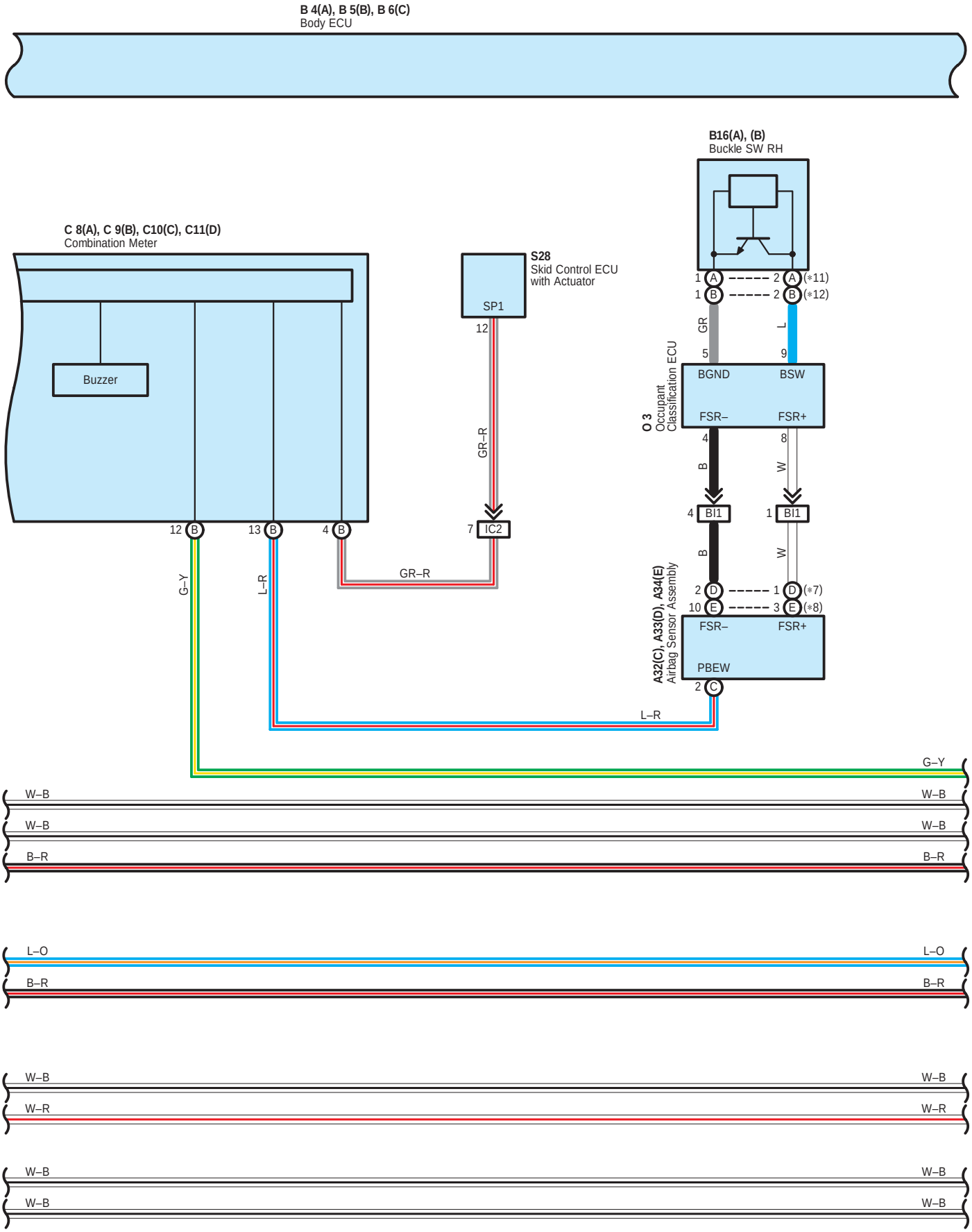
B 4(A), B 5(B), B 6(C)
Body ECU
B16(A), (B)
Buckle SW RH
C 8(A), C 9(B), C10(C), C11(D)
Combination Meter
Buzzer
S28
Skid Control ECU
with Actuator
SP1
12
GR–R
7 IC2
12 B
13 B
4 B
G–Y
L–R
GR–R
1 A ----- 2 A (*11)
1 B ----- 2 B (*12)
GR
L
5
9
BGND
BSW
FSR–
FSR+
O 3
Occupant
Classification ECU
4
8
B
W
4 BI1
1 BI1
2 D ----- 1 D (*7)
10 E ----- 3 E (*8)
A32(C), A33(D), A34(E)
Airbag Sensor Assembly
PBEW
2 C
L–R
G–Y
W–B
W–B
W–B
W–B
B–R
B–R
L–O
L–O
B–R
B–R
W–B
W–B
W–R
W–R
W–B
W–B
W–B
W–B

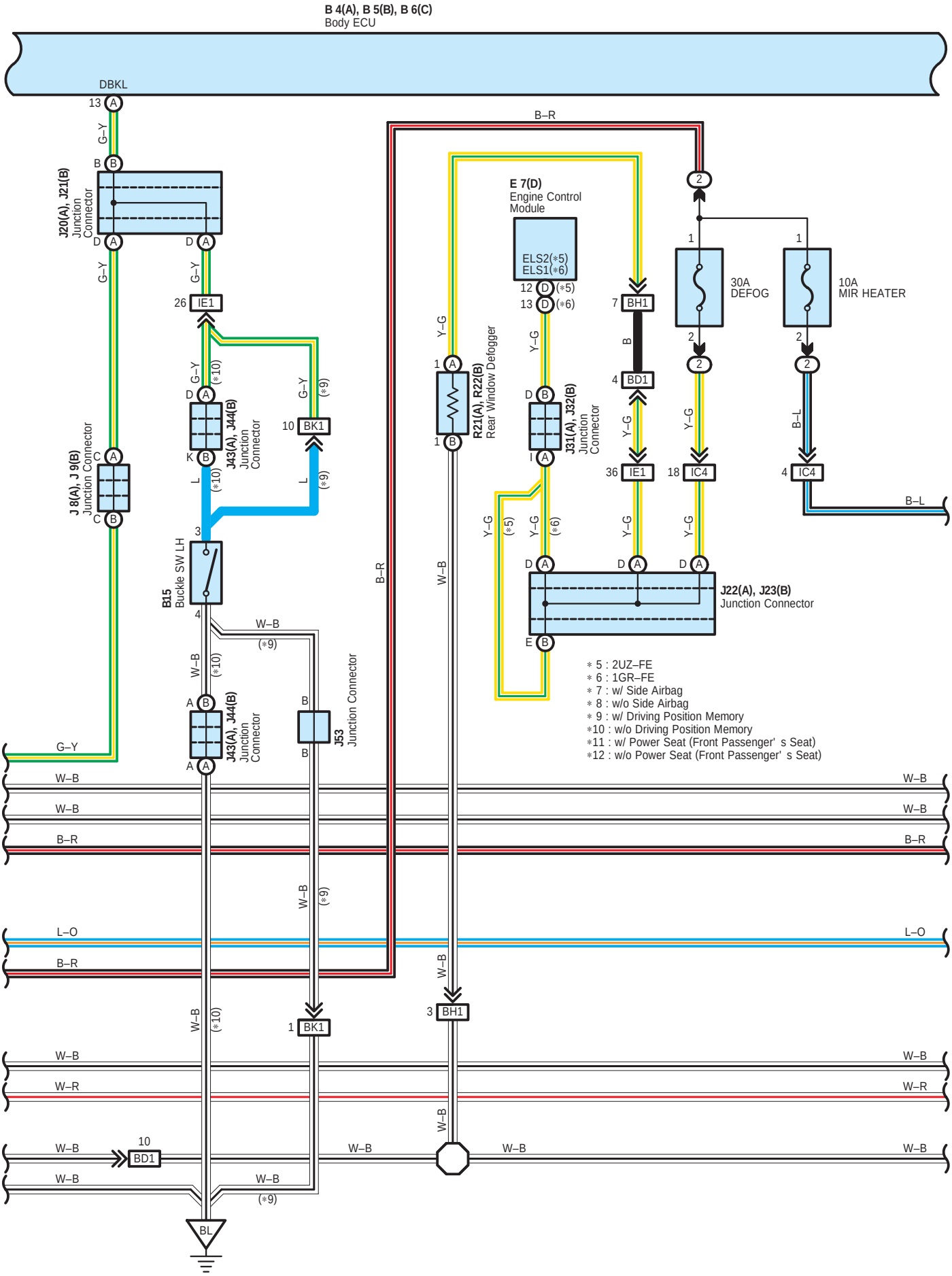
B 4(A), B 5(B), B 6(C)
Body ECU
DBKL
13 A
G–Y
B B
J20(A), J21(B)
Junction Connector
D A
D A
G–Y
G–Y
26 IE1
G–Y
(*10)
D A
J43(A), J44(B)
Junction Connector
K B
L
(*10)
3
B15
Buckle SW LH
4
W–B
(*10)
A B
J43(A), J44(B)
Junction Connector
A A
G–Y
J 8(A), J 9(B)
Junction Connector
C A
C B
G–Y
(*9)
10 BK1
L
(*9)
B
J53
Junction Connector
B
B–R
W–B
(*9)
W–B
(*9)
1 BK1
B–R
E 7(D)
Engine Control
Module
ELS2(*5)
ELS1(*6)
12 D (*5)
13 D (*6)
Y–G
1 A
R21(A), R22(B)
Rear Window Defogger
1 B
W–B
3 BH1
Y–G
D B
J31(A), J32(B)
Junction
Connector
I A
Y–G
(*5)
Y–G
(*6)
D A
D A
E B
7 BH1
B
4 BD1
Y–G
36 IE1
Y–G
D A
2
1
30A
DEFOG
2
2
Y–G
18 IC4
Y–G
D A
2
1
10A
MIR HEATER
2
2
B–L
4 IC4
B–L
J22(A), J23(B)
Junction Connector
∗ 5 : 2UZ–FE
∗ 6 : 1GR–FE
∗ 7 : w/ Side Airbag
∗ 8 : w/o Side Airbag
∗ 9 : w/ Driving Position Memory
∗10 : w/o Driving Position Memory
∗11 : w/ Power Seat (Front Passenger' s Seat)
∗12 : w/o Power Seat (Front Passenger' s Seat)
W–B
W–B
B–R
L–O
B–R
W–B
W–R
W–B
W–B
10
BD1
W–B
W–B
W–B
W–B
W–B
W–B
W–B
(*9)
BL

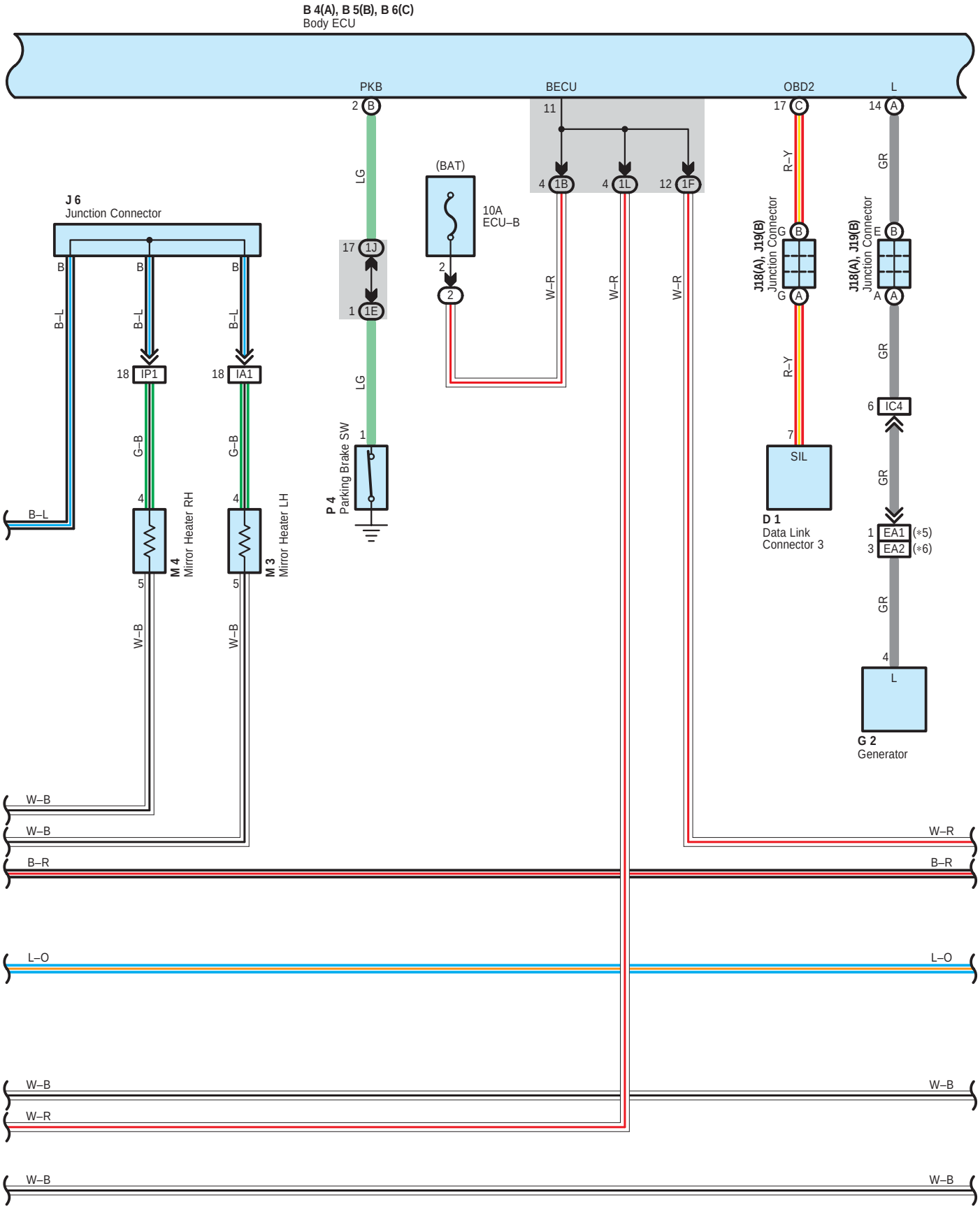
B 4(A), B 5(B), B 6(C)
Body ECU
PKB
BECU
OBD2
L
2 B
11
17 C
14 A
LG
(BAT)
10A
ECU–B
4 1B
4 1L
12 1F
R–Y
GR
J 6
Junction Connector
17 1J
1 1E
2
W–R
J18(A), J19(B)
Junction Connector
G B
G A
E B
A A
B
B–L
18 IP1
18 IA1
G–B
4
5
M 4
Mirror Heater RH
M 3
Mirror Heater LH
W–B
P 4
Parking Brake SW
1
7
SIL
D 1
Data Link
Connector 3
6 IC4
1 EA1 (*5)
3 EA2 (*6)
G 2
Generator
B–R
L–O

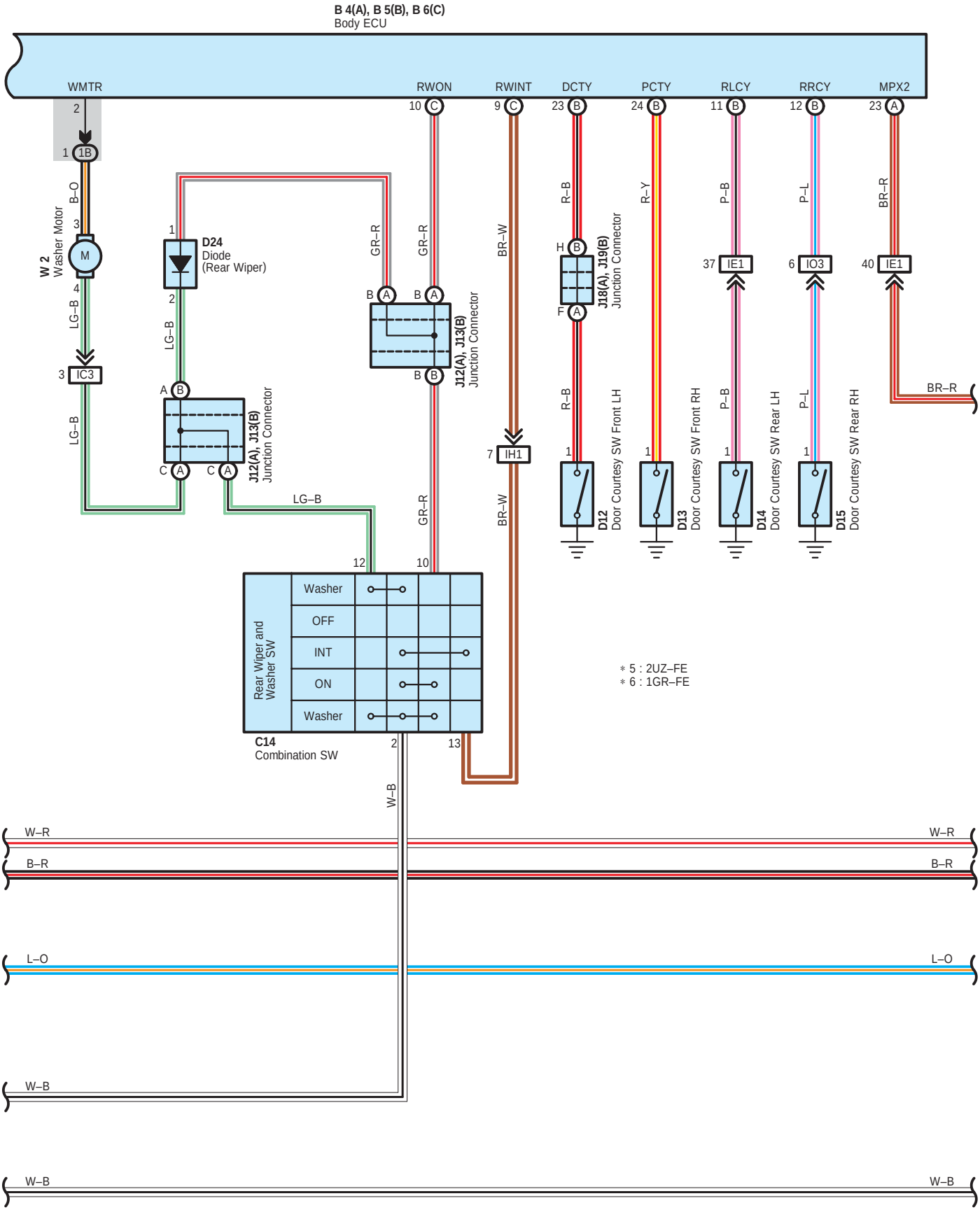
B 4(A), B 5(B), B 6(C)
Body ECU
WMTR
RWON
RWINT
DCTY
PCTY
RLCY
RRCY
MPX2
W 2
Washer Motor
D24
Diode
(Rear Wiper)
J12(A), J13(B)
Junction Connector
J18(A), J19(B)
Junction Connector
D12
Door Courtesy SW Front LH
D13
Door Courtesy SW Front RH
D14
Door Courtesy SW Rear LH
D15
Door Courtesy SW Rear RH
C14
Combination SW
Rear Wiper and Washer SW
Washer
OFF
INT
ON
Washer
IC3
IH1
IE1
IO3
* 5 : 2UZ–FE
* 6 : 1GR–FE
B–O
LG–B
GR–R
BR–W
R–B
R–Y
P–B
P–L
BR–R
W–B
W–R
B–R
L–O

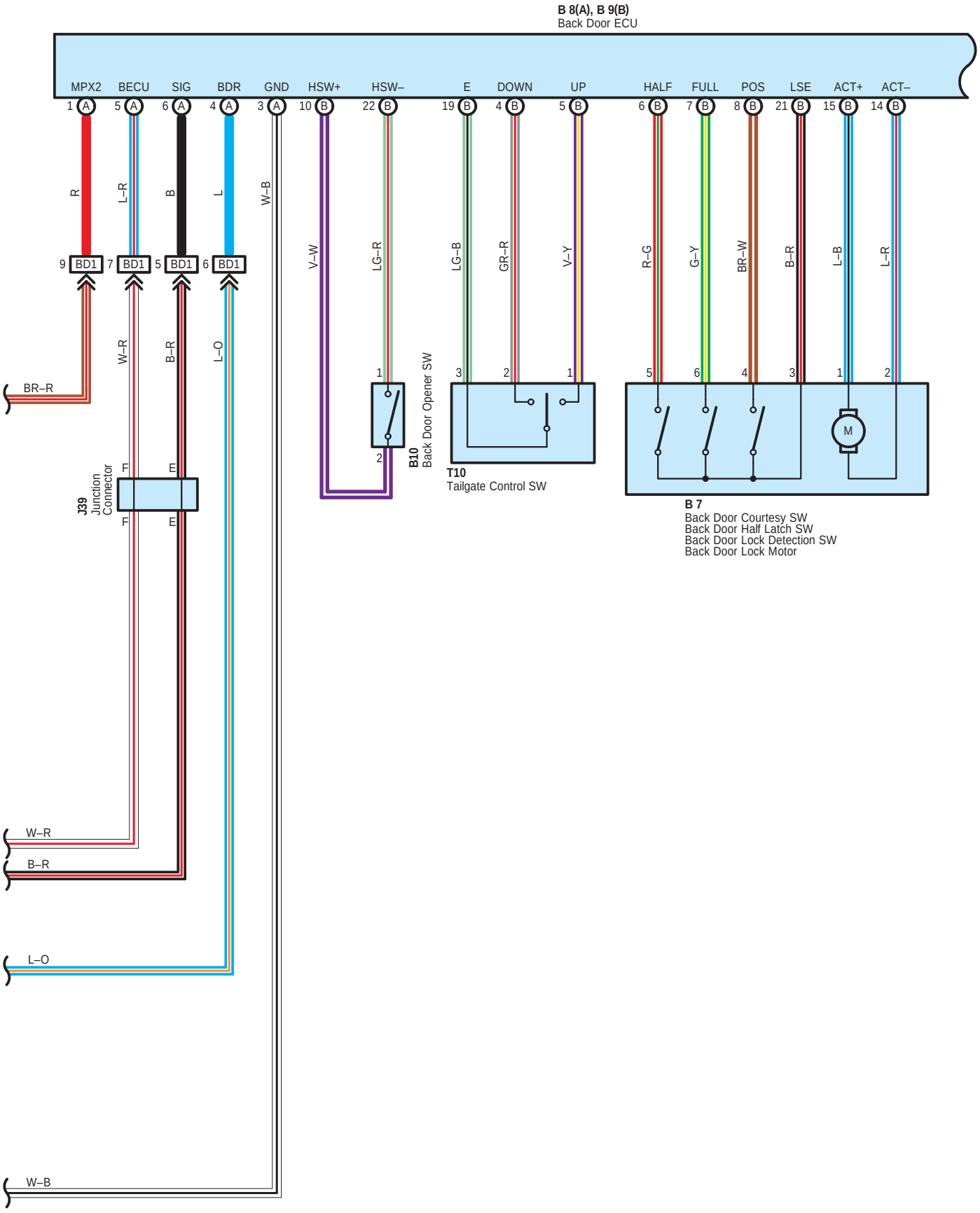
B 8(A), B 9(B)
Back Door ECU
MPX2
BECU
SIG
BDR
GND
HSW+
HSW–
E
DOWN
UP
HALF
FULL
POS
LSE
ACT+
ACT–
R
L–R
B
L
W–B
V–W
LG–R
LG–B
GR–R
V–Y
R–G
G–Y
BR–W
B–R
L–B
L–R
BD1
W–R
B–R
L–O
BR–R
J39
Junction Connector
B10
Back Door Opener SW
T10
Tailgate Control SW
B 7
Back Door Courtesy SW
Back Door Half Latch SW
Back Door Lock Detection SW
Back Door Lock Motor
M
W–R
B–R
L–O
W–B

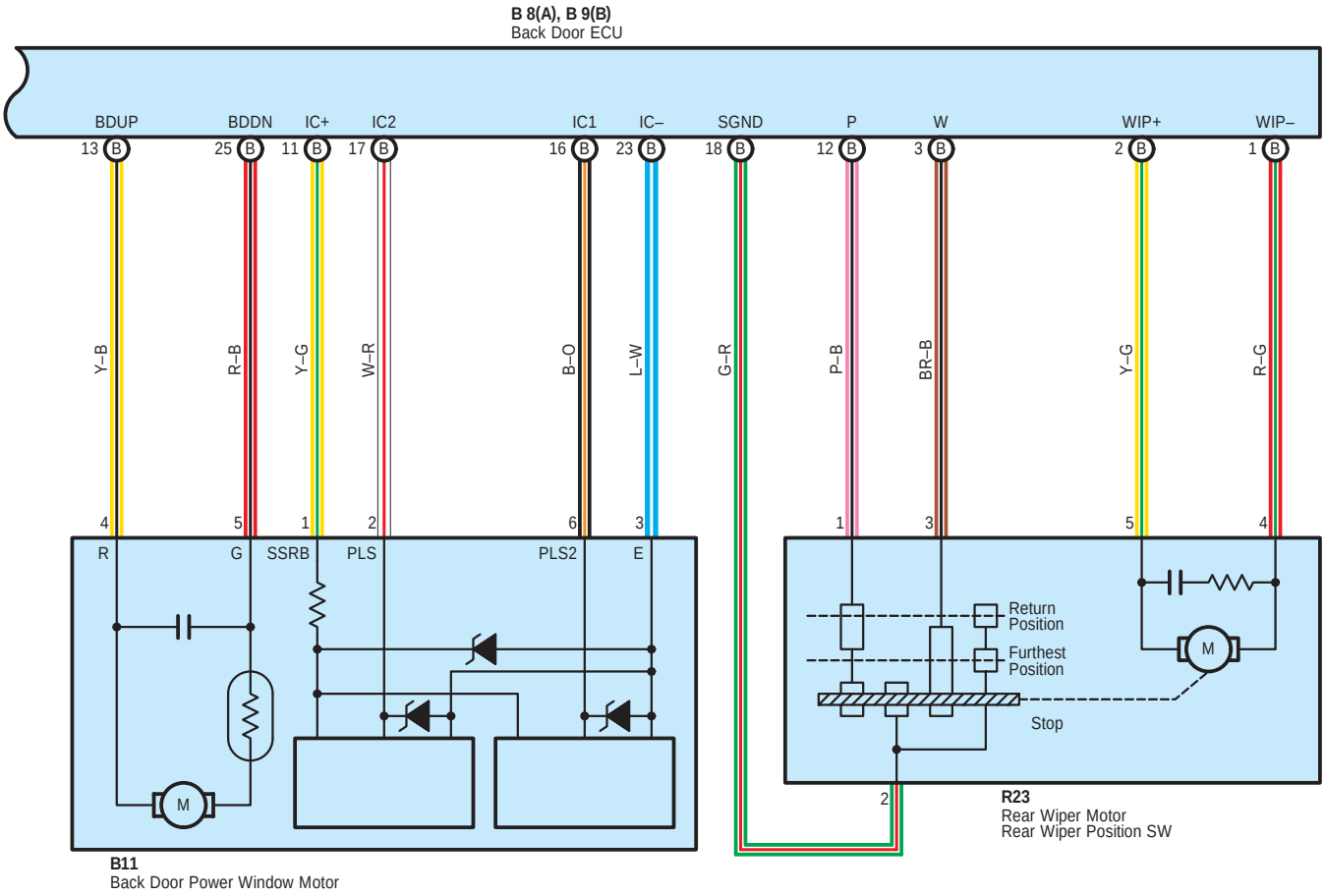
B 8(A), B 9(B)
Back Door ECU
BDUP
BDDN
IC+
IC2
IC1
IC–
SGND
P
W
WIP+
WIP–
13 B
25 B
11 B
17 B
16 B
23 B
18 B
12 B
3 B
2 B
1 B
Y–B
R–B
Y–G
W–R
B–O
L–W
G–R
P–B
BR–B
Y–G
R–G
4
5
1
2
6
3
1
3
5
4
R
G
SSRB
PLS
PLS2
E
M
Return Position
Furthest Position
Stop
M
2
B11
Back Door Power Window Motor
R23
Rear Wiper Motor
Rear Wiper Position SW

System Outline

Communication Outline

Communication is made among the body, theft deterrent and back door ECUs.
When the ECU receives a signal from related switches, i.e., the rear wiper SW, the body ECU sends signals to the back door ECU, and moves rear wiper.
For details, please refer to the new car features and/or the repair manual.

○ : **Parts Location**

Code	See Page	Code	See Page	Code	See Page
A32 C	36	F2	34 (1GR–FE)	J37	38
A33 D	36	F5	32 (2UZ–FE)	J38	40
A34 E	36		34 (1GR–FE)	J39	40
A39	36	F6	32 (2UZ–FE)	J40 A	40
B1	36		34 (1GR–FE)	J41 B	40
B4 A	36	G2	32 (2UZ–FE)	J43 A	42 (*1)
B5 B	36		34 (1GR–FE)		43 (*2)
B6 C	36	H1	32 (2UZ–FE)	J44 B	42 (*1)
B7	40		34 (1GR–FE)		43 (*2)
B8 A	40	H2	32 (2UZ–FE)	J53	42 (*1)
B9 B	40		34 (1GR–FE)	K3	39
B10	40	H3	32 (2UZ–FE)	L2	40
B11	40		34 (1GR–FE)	M3	41
B15	42 (*1)	H4	32 (2UZ–FE)	M4	41
	43 (*2)		34 (1GR–FE)	M5	41
B16 A	42 (*1)	H9	32 (2UZ–FE)	O3	42 (*1)
	43 (*2)		34 (1GR–FE)		43 (*2)
B16 B	42 (*1)	H10	32 (2UZ–FE)	P1	33 (2UZ–FE)
	43 (*2)		34 (1GR–FE)		35 (1GR–FE)
C8 A	37	I17	37	P4	39
C9 B	37	I20 A	40	P7	41
C10 C	37	I20 B	40	P9	41
C11 D	37	J1	33 (2UZ–FE)	P10	41
C12	37		35 (1GR–FE)	P11	41
C14	37	J3	33 (2UZ–FE)	P12	41
D1	37		35 (1GR–FE)	P13	41
D2	37	J4	38	P14	41
D3	37	J5	38	P15	41
D7	40	J6	38	R21 A	41
D8	40	J7	38	R22 B	41
D9	40	J8 A	38	R23	41
D10	40	J9 B	38	S12	39
D11	40	J10 A	38	S15	39
D12	40	J11 B	38	S28	33 (2UZ–FE)
D13	40	J12 A	38		35 (1GR–FE)
D14	40	J13 B	38	S32	41
D15	40	J14 A	38	S33	41
D16	40	J15 B	38	S34	41
D17	40	J18 A	38	S35	41
D18	40	J19 B	38	T1	33 (2UZ–FE)
D19	40	J20 A	38		35 (1GR–FE)
D20	40	J21 B	38	T5	39
D21	40	J22 A	38	T9	39
D24	37	J23 B	38	T10	41
E3	32 (2UZ–FE)	J24	38	V6	41
	34 (1GR–FE)	J25	38	V7	41
E7 D	37	J31 A	38	W2	33 (2UZ–FE)
F1	32 (2UZ–FE)	J32 B	38		35 (1GR–FE)
	34 (1GR–FE)	J33	38	W3	33 (2UZ–FE)
F2	32 (2UZ–FE)	J35	38		35 (1GR–FE)

* 1 : Power Seat * 2 : Manual Seat

: Relay Blocks

Code	See Page	Relay Blocks (Relay Block Location)
2	22	Engine Room R/B (Engine Compartment Left)

: Junction Block and Wire Harness Connector

Code	See Page	Junction Block and Wire Harness (Connector Location)
1A	24	Roof Wire and Driver Side J/B (Lower Finish Panel)
1B	24	Engine Room Main Wire and Driver Side J/B (Lower Finish Panel)
1C		
1D		
1E		
1F	24	Floor No.2 Wire and Driver Side J/B (Lower Finish Panel)
1G	25	Instrument Panel Wire and Driver Side J/B (Lower Finish Panel)
1H		
1J		
1K		
1L		
3C	28	Instrument Panel Wire and Center J/B (Instrument Panel Brace RH)
3D		
3E		
3F		

: Connector Joining Wire Harness and Wire Harness

Code	See Page	Joining Wire Harness and Wire Harness (Connector Location)
EA1	44 (2UZ–FE)	Engine No.2 Wire and Engine Room Main Wire (Under the Engine Room R/B)
EA2	45 (1GR–FE)	
IA1	46	Front Door LH Wire and Instrument Panel Wire (Left Kick Panel)
IA2		
IC2	46	Instrument Panel Wire and Engine Room Main Wire (Left Kick Panel)
IC3		
IC4		
IC5		
IE1	46	Instrument Panel Wire and Floor No.2 Wire (Left Kick Panel)
IF1	46	Instrument Panel Wire and Relay Wire (Behind the Instrument Panel J/B)
IG1	46	Instrument Panel No.2 Wire and Instrument Panel Wire (Behind the Combination Meter)
IH1	46	Instrument Panel Wire and Instrument Panel Wire (Behind the Combination Meter)
IM1	47	Engine Wire and Instrument Panel Wire (Right Side of Blower Unit)
IN1	47	Instrument Panel Wire and Engine Room Main Wire (Right Kick Panel)
IO3	47	Instrument Panel Wire and Floor Wire (Right Kick Panel)
IP1	47	Front Door RH Wire and Instrument Panel Wire (Right Kick Panel)
IP2		
BA1	48	Rear Door No.2 Wire and Instrument Panel Wire (Left Center Pillar)
BB1	48	Rear Door No.1 Wire and Instrument Panel Wire (Right Center Pillar)
BD1	48	Back Door No.1 Wire and Floor No.2 Wire (Left Rear Side of Roof)
BH1	48	Back Door No.1 Wire and Back Door No.2 Wire (Left Side of Back Door)
BI1	50 (*1)	Floor Wire and Seat No.1 Wire (Under the Front RH Seat)
	51 (*2)	
BK1	50 (*1)	Floor No.2 Wire and Seat No.2 Wire (Under the Front LH Seat)
BL1	48	Floor No.2 Wire and Step Rear Floor LH Wire (Near the Side Step LH)
BM1	48	Floor Wire and Step Rear Floor RH Wire (Near the Side Step RH)

* 1 : Power Seat * 2 : Manual Seat

▽ : **Ground Points**

Code	See Page	Ground Points Location
EA	44 (2UZ–FE)	Front Right Fender
	45 (1GR–FE)	
EB	44 (2UZ–FE)	Front Left Fender
	45 (1GR–FE)	
ED	44 (2UZ–FE)	Left Bank Cylinder Head
EE	44 (2UZ–FE)	Rear Side of Cylinder Block
	45 (1GR–FE)	Rear Side of Right Bank Cylinder Block
IG	46	Left Kick Panel
II	46	Instrument Panel Brace RH
IK	46	Right Kick Panel
BL	48	Floor Seat Crossmember LH
BO	48	Rear Pillar LH

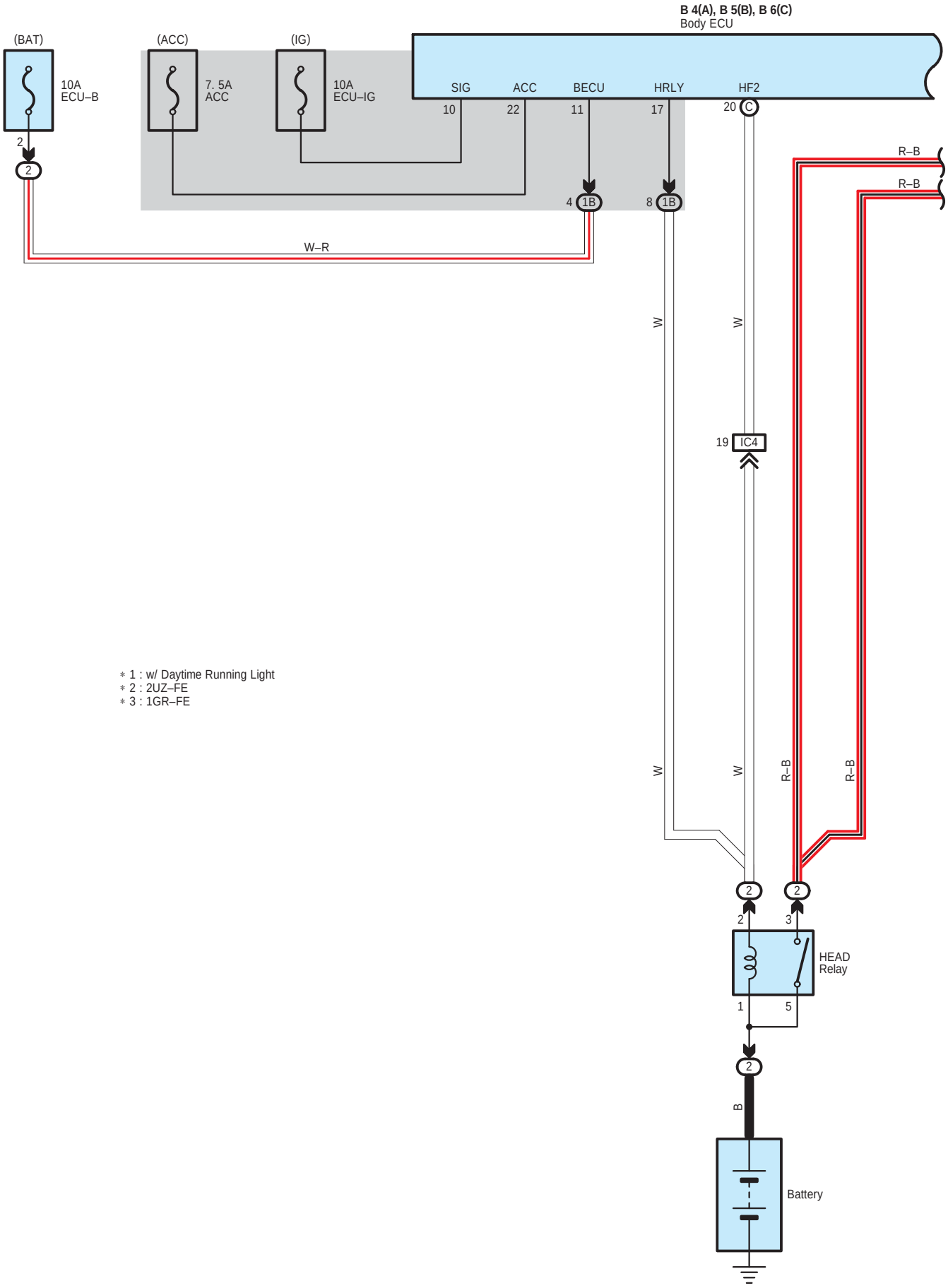

* 1 : w/ Daytime Running Light
* 2 : 2UZ–FE
* 3 : 1GR–FE

B 4(A), B 5(B), B 6(C)
Body ECU

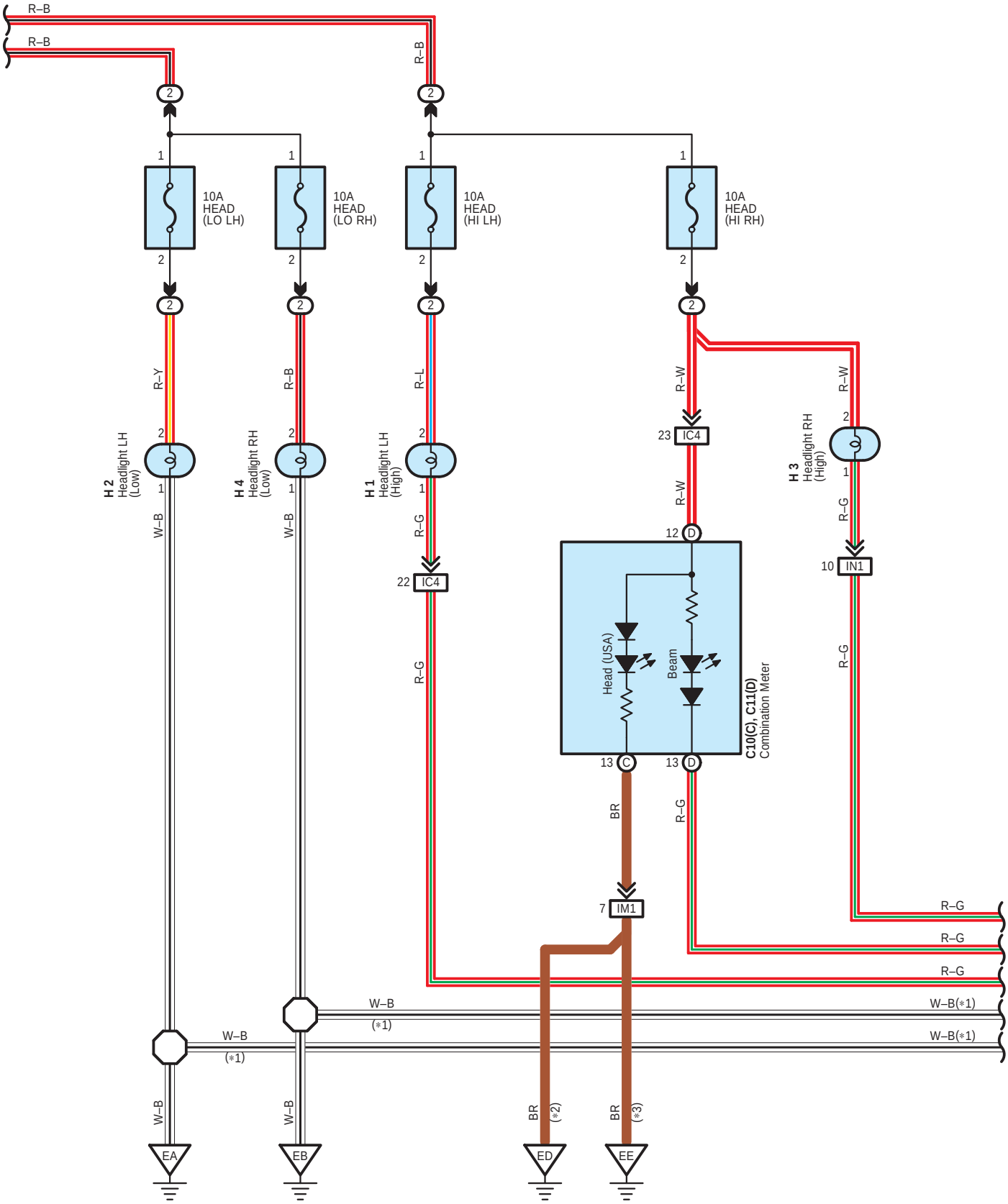

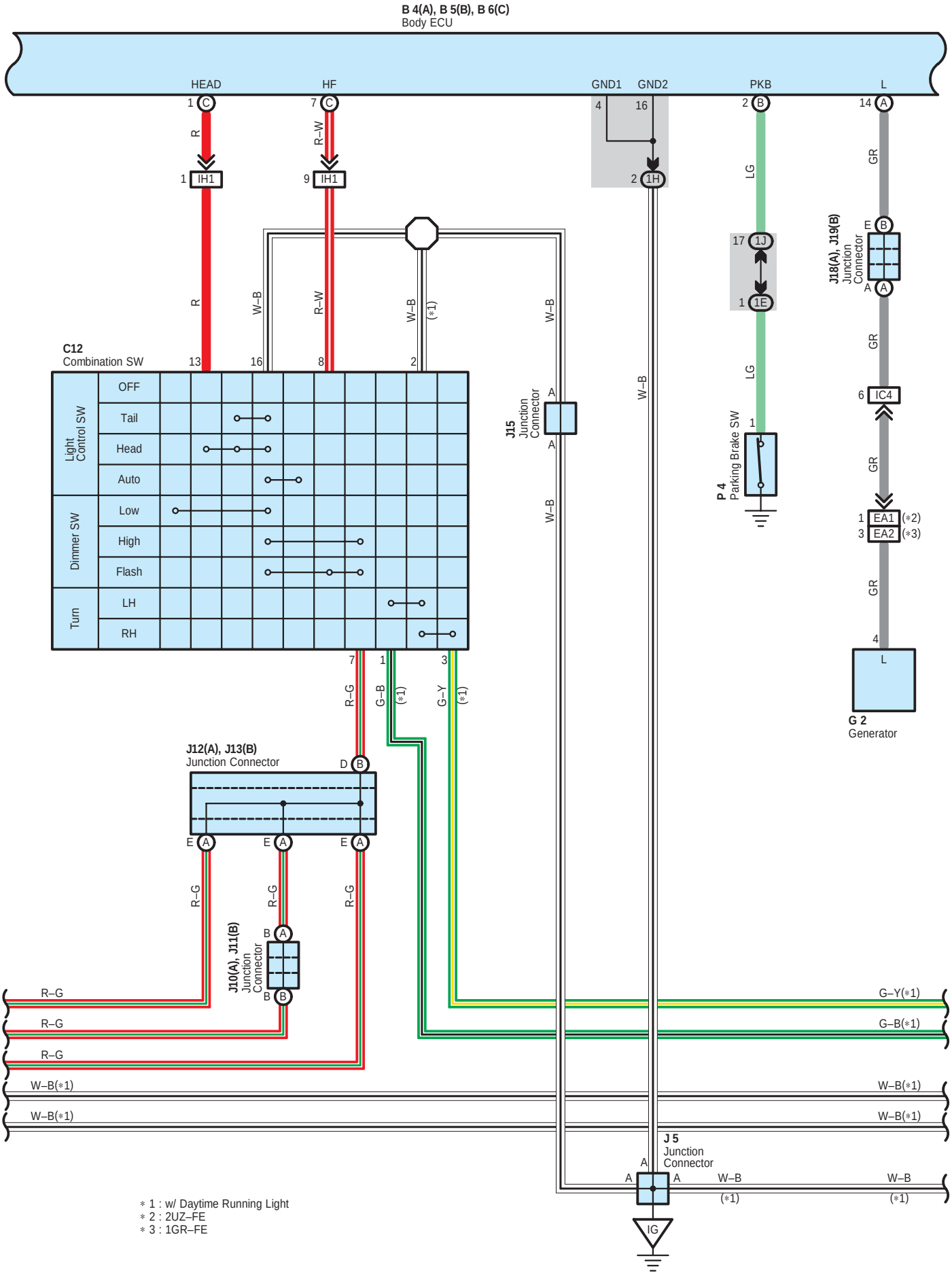
B 4(A), B 5(B), B 6(C)
Body ECU
HEAD
HF
GND1
GND2
PKB
L
C12
Combination SW
Light Control SW
OFF
Tail
Head
Auto
Dimmer SW
Low
High
Flash
Turn
LH
RH
J15
Junction Connector
P 4
Parking Brake SW
J18(A), J19(B)
Junction Connector
G 2
Generator
J12(A), J13(B)
Junction Connector
J10(A), J11(B)
Junction Connector
J 5
Junction Connector
IG
R
R–W
W–B
LG
GR
R–G
G–B
G–Y
(*1)
(*2)
(*3)
R–G
G–Y(*1)
G–B(*1)
W–B(*1)
* 1 : w/ Daytime Running Light
* 2 : 2UZ–FE
* 3 : 1GR–FE

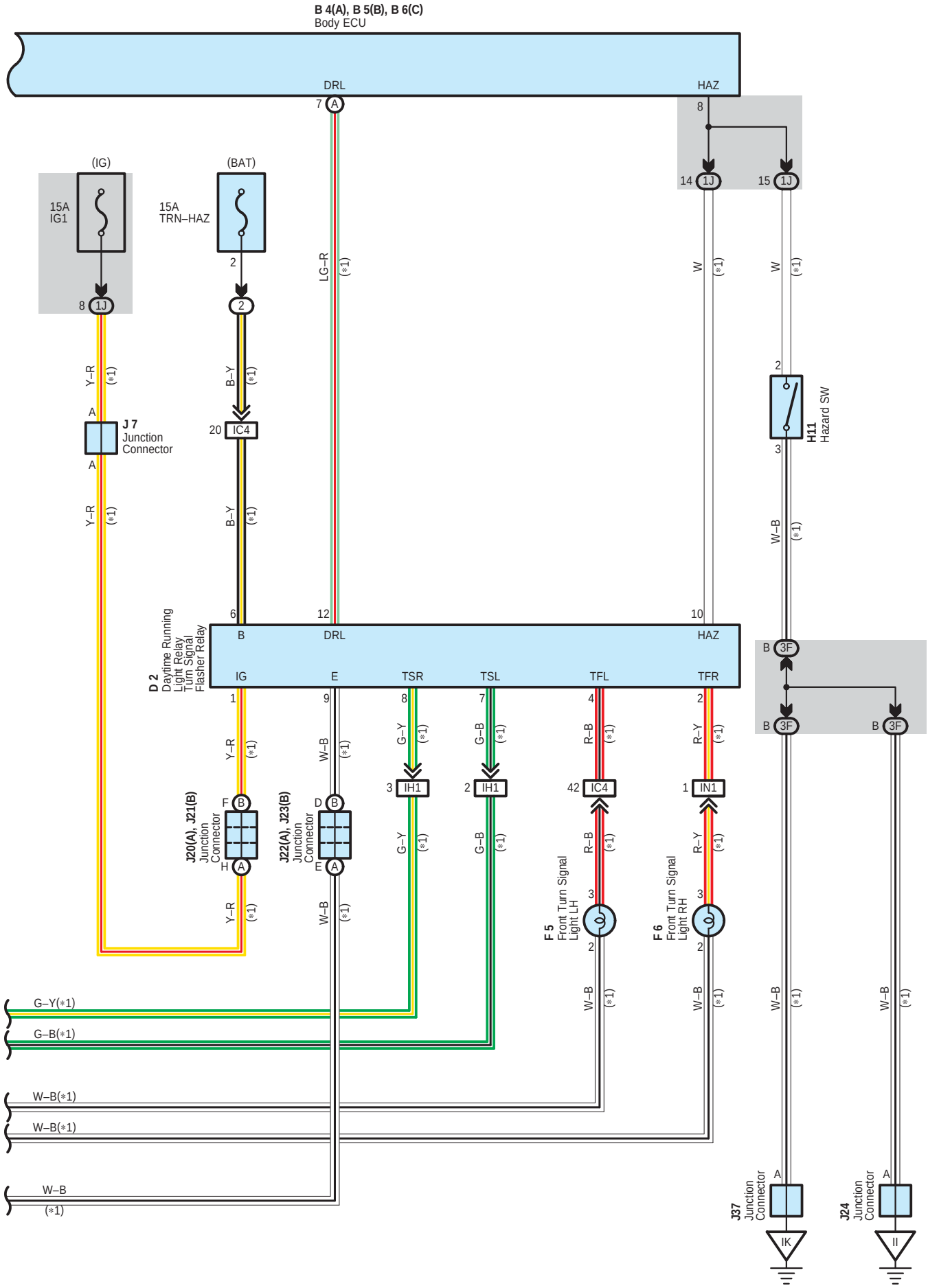
B 4(A), B 5(B), B 6(C)
Body ECU
DRL
HAZ
(IG)
(BAT)
15A
IG1
15A
TRN–HAZ
J 7
Junction
Connector
D 2
Daytime Running
Light Relay
Turn Signal
Flasher Relay
IG
E
TSR
TSL
TFL
TFR
J20(A), J21(B)
Junction
Connector
J22(A), J23(B)
Junction
Connector
F 5
Front Turn Signal
Light LH
F 6
Front Turn Signal
Light RH
H11
Hazard SW
J37
Junction
Connector
J24
Junction
Connector
G–Y(*1)
G–B(*1)
W–B(*1)
W–B(*1)
W–B
(*1)

Headlight

System Outline

(w/ daytime running light)

* This system is designed to automatically activate the turn signal lights during the daytime to keep the car highly visible to other vehicles. This system is controlled by the body ECU.
  This system makes use of the turn signal lights as daytime running lights.
  For this reason, when the turn signal lights are operated, the daytime running lights function is interrupted momentarily, which, however, will be brought back into operation as soon as the interposed operation is over.
* This system is enabled when the conditions given below are met.

A) Ignition switch ON condition

B) Turn signal light switch OFF condition

C) Hazard light switch OFF condition

D) Light control switch OFF condition

E) Parking brake switch OFF condition (Parking brake out of operating condition)**

**: This system does not become active when the parking brake switch is ON. However, once the OFF signal of the parking brake switch is input into the body ECU, this system will become active thereafter, regardless of whether the parking brake switch is ON or OFF.

○ : Parts Location

Code	See Page	Code	See Page	Code	See Page
B4 A	36	H1	32 (2UZ–FE)	J12 A	38
B5 B	36		34 (1GR–FE)	J13 B	38
B6 C	36	H2	32 (2UZ–FE)	J15	38
C10 C	37		34 (1GR–FE)	J18 A	38
C11 D	37	H3	32 (2UZ–FE)	J19 B	38
C12	37		34 (1GR–FE)	J20 A	38
D2	37	H4	32 (2UZ–FE)	J21 B	38
F5	32 (2UZ–FE)		34 (1GR–FE)	J22 A	38
	34 (1GR–FE)	H11	37	J23 B	38
F6	32 (2UZ–FE)	J5	38	J24	38
	34 (1GR–FE)	J7	38	J37	38
G2	32 (2UZ–FE)	J10 A	38	P4	39
	34 (1GR–FE)	J11 B	38		

⬭ : Relay Blocks

Code	See Page	Relay Blocks (Relay Block Location)
2	22	Engine Room R/B (Engine Compartment Left)

⬭ : Junction Block and Wire Harness Connector

Code	See Page	Junction Block and Wire Harness (Connector Location)
1B	24	Engine Room Main Wire and Driver Side J/B (Lower Finish Panel)
1E		
1H	25	Instrument Panel Wire and Driver Side J/B (Lower Finish Panel)
1J		
3F	28	Instrument Panel Wire and Center J/B (Instrument Panel Brace RH)

▭ : Connector Joining Wire Harness and Wire Harness

Code	See Page	Joining Wire Harness and Wire Harness (Connector Location)
EA1	44 (2UZ–FE)	Engine No.2 Wire and Engine Room Main Wire (Under the Engine Room R/B)
EA2	45 (1GR–FE)	
IC4	46	Instrument Panel Wire and Engine Room Main Wire (Left Kick Panel)
IH1	46	Instrument Panel Wire and Instrument Panel Wire (Behind the Combination Meter)
IM1	47	Engine Wire and Instrument Panel Wire (Right Side of Blower Unit)
IN1	47	Instrument Panel Wire and Engine Room Main Wire (Right Kick Panel)

▽ : **Ground Points**

Code	See Page	Ground Points Location
EA	44 (2UZ–FE)	Front Right Fender
	45 (1GR–FE)	
EB	44 (2UZ–FE)	Front Left Fender
	45 (1GR–FE)	
ED	44 (2UZ–FE)	Left Bank Cylinder Head
EE	44 (2UZ–FE)	Rear Side of Cylinder Block
	45 (1GR–FE)	Rear Side of Right Bank Cylinder Block
IG	46	Left Kick Panel
II	46	Instrument Panel Brace RH
IK	46	Right Kick Panel

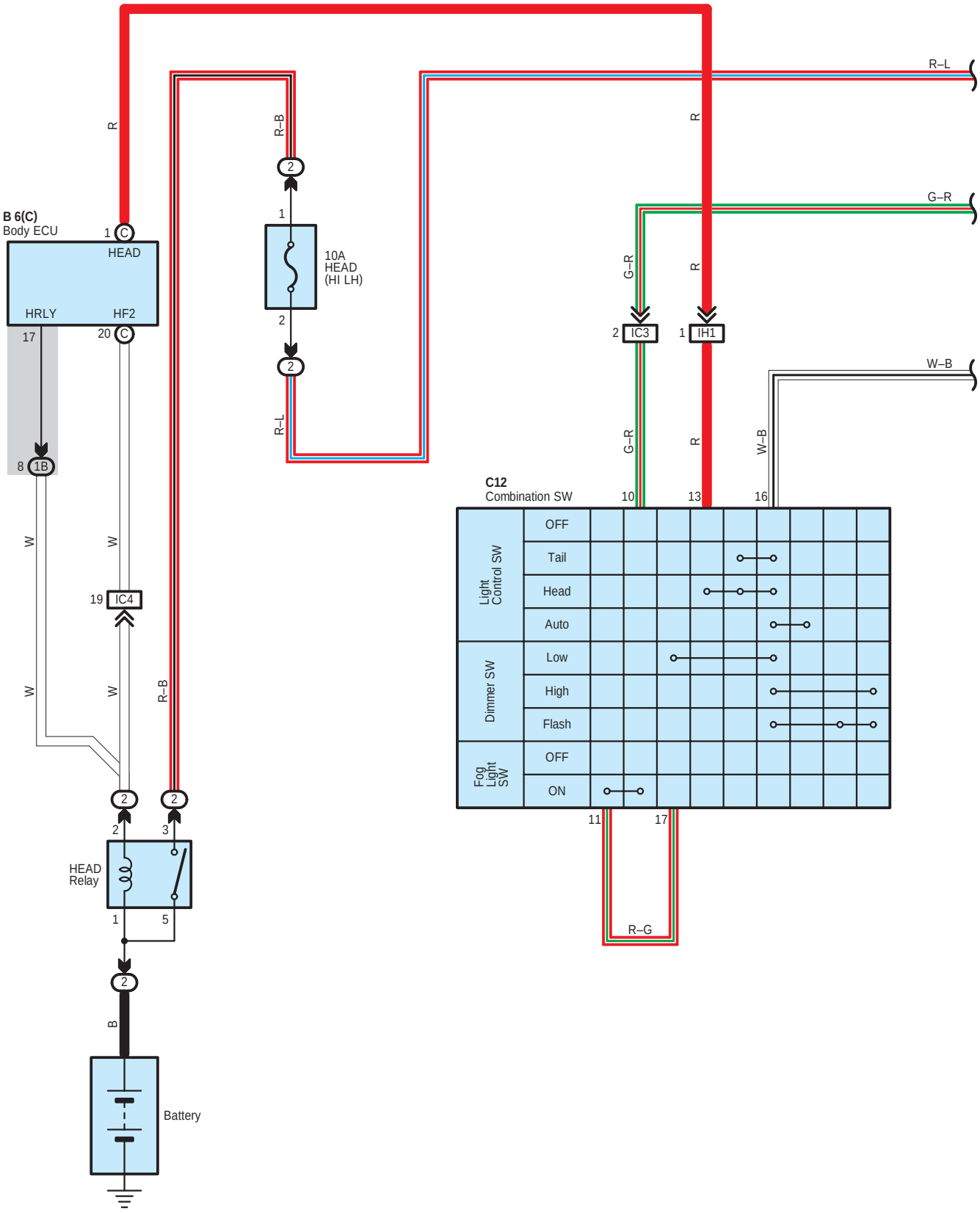
B 6(C)
Body ECU
1 C
HEAD
HRLY
HF2
17
20 C
8 1B
R
R–B
2
1
10A
HEAD
(HI LH)
2
2
R–L
R–L
G–R
R
2 IC3
1 IH1
W–B
G–R
R
W–B
C12
Combination SW
10
13
16
Light Control SW
OFF
Tail
Head
Auto
Dimmer SW
Low
High
Flash
Fog Light SW
OFF
ON
11
17
R–G
W
W
19 IC4
W
W
R–B
2
2
2
3
HEAD
Relay
1
5
2
B
Battery

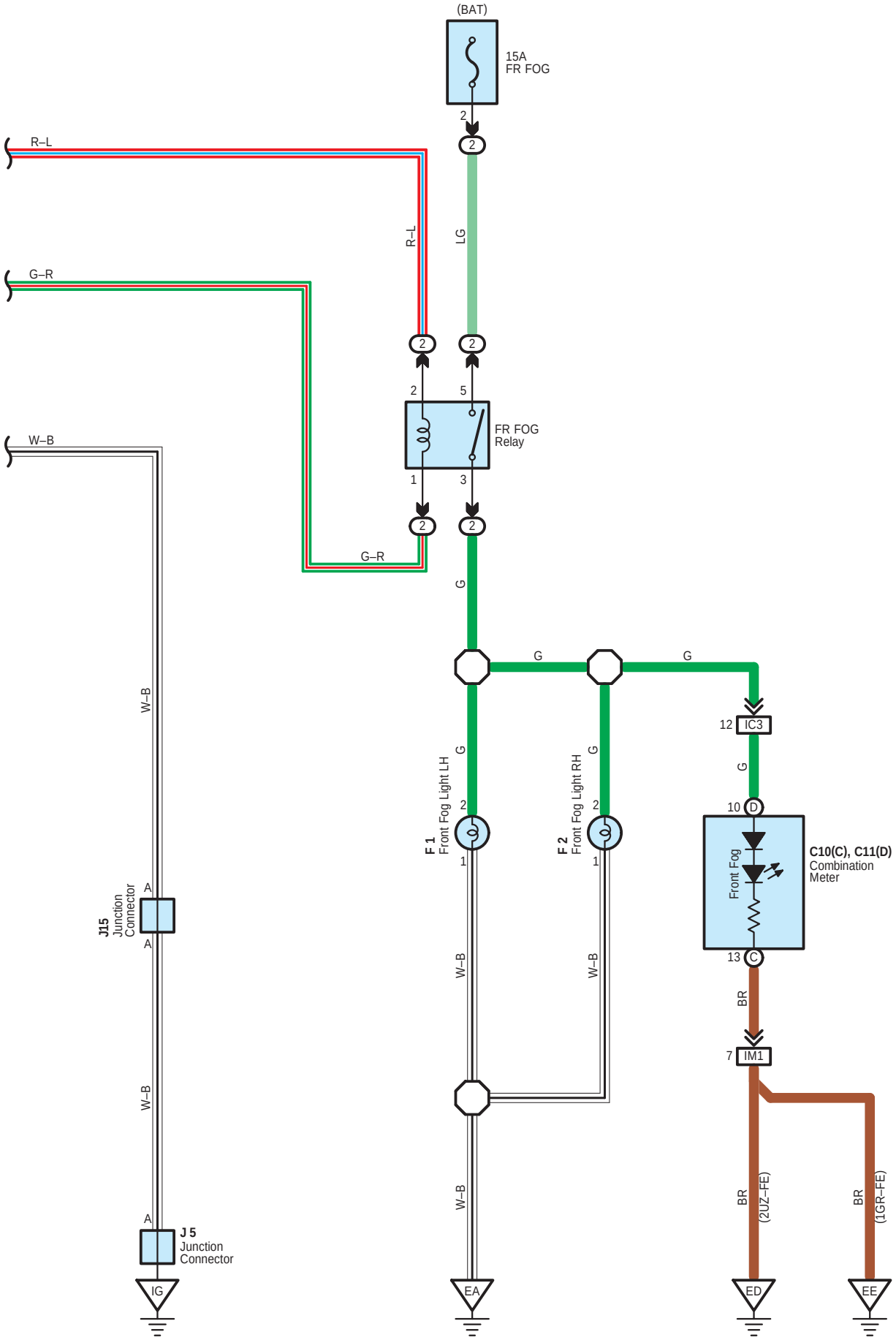
(BAT)
15A
FR FOG
2
R–L
LG
G–R
FR FOG
Relay
W–B
G
F 1
Front Fog Light LH
F 2
Front Fog Light RH
12
IC3
10
D
Front Fog
C10(C), C11(D)
Combination
Meter
13
C
BR
7
IM1
J15
Junction
Connector
J 5
Junction
Connector
IG
EA
ED
EE
(2UZ–FE)
(1GR–FE)

Front Fog Light

: Parts Location

Code		See Page	Code	See Page	Code	See Page
B6	C	36	F1	32 (2UZ–FE)	J5	38
C10	C	37		34 (1GR–FE)	J15	38
C11	D	37	F2	32 (2UZ–FE)		
C12		37		34 (1GR–FE)		

: Relay Blocks

Code	See Page	Relay Blocks (Relay Block Location)
2	22	Engine Room R/B (Engine Compartment Left)

: Junction Block and Wire Harness Connector

Code	See Page	Junction Block and Wire Harness (Connector Location)
1B	24	Engine Room Main Wire and Driver Side J/B (Lower Finish Panel)

: Connector Joining Wire Harness and Wire Harness

Code	See Page	Joining Wire Harness and Wire Harness (Connector Location)
IC3	46	Instrument Panel Wire and Engine Room Main Wire (Left Kick Panel)
IC4		
IH1	46	Instrument Panel Wire and Instrument Panel Wire (Behind the Combination Meter)
IM1	47	Engine Wire and Instrument Panel Wire (Right Side of Blower Unit)

: Ground Points

Code	See Page	Ground Points Location
EA	44 (2UZ–FE)	Front Right Fender
	45 (1GR–FE)	
ED	44 (2UZ–FE)	Left Bank Cylinder Head
EE	44 (2UZ–FE)	Rear Side of Cylinder Block
	45 (1GR–FE)	Rear Side of Right Bank Cylinder Block
IG	46	Left Kick Panel

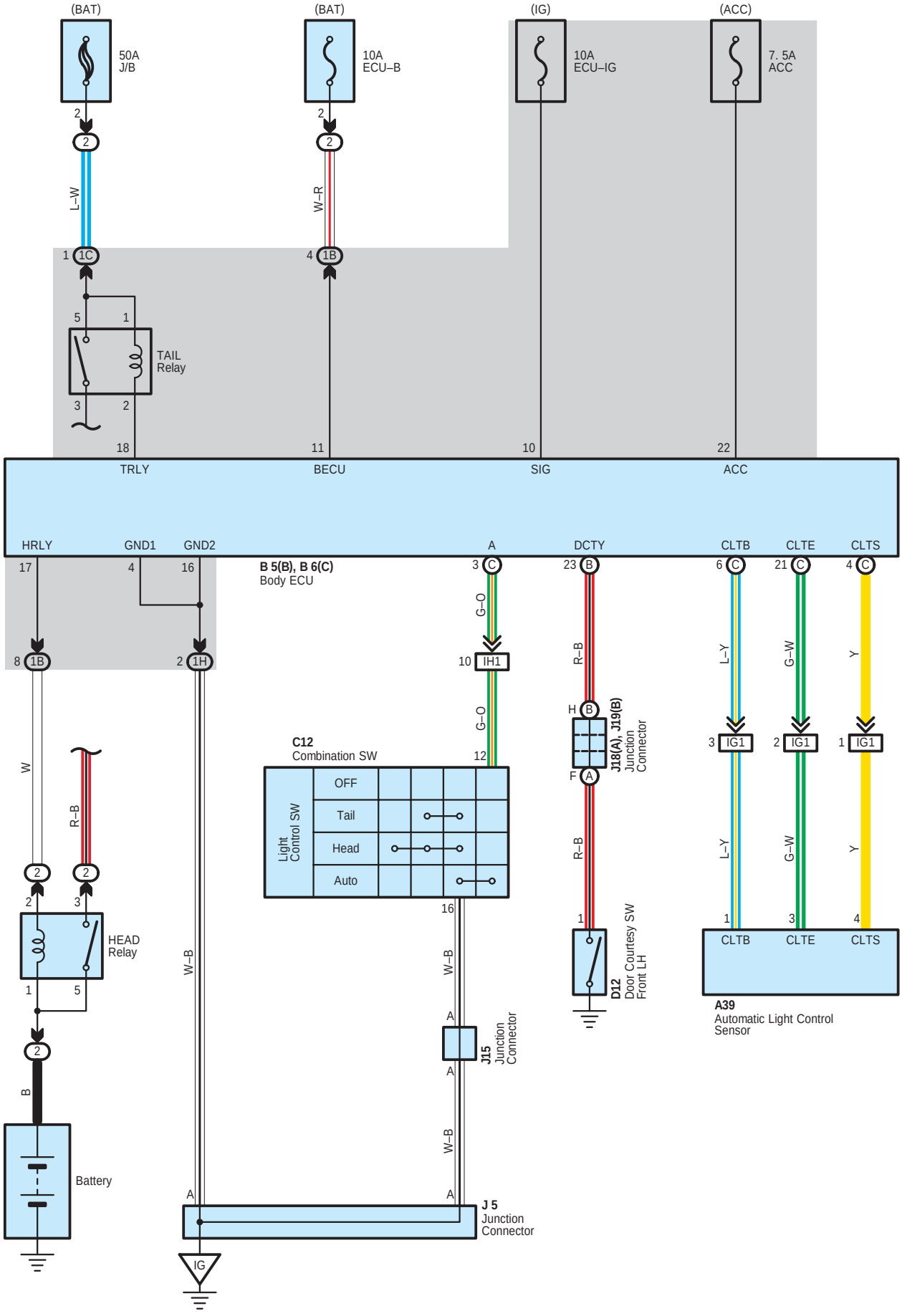
(BAT)
50A
J/B
(BAT)
10A
ECU–B
(IG)
10A
ECU–IG
(ACC)
7. 5A
ACC
L–W
W–R
TAIL
Relay
TRLY
BECU
SIG
ACC
HRLY
GND1
GND2
B 5(B), B 6(C)
Body ECU
A
DCTY
CLTB
CLTE
CLTS
G–O
R–B
L–Y
G–W
Y
C12
Combination SW
Light
Control SW
OFF
Tail
Head
Auto
J18(A), J19(B)
Junction
Connector
D12
Door Courtesy SW
Front LH
A39
Automatic Light Control
Sensor
HEAD
Relay
W
W–B
B
Battery
J15
Junction
Connector
J 5
Junction
Connector
IG

System Outline

The automatic light control system works when the light control SW is turned to AUTO. The automatic light control sensor detects the brightness around the vehicle. By this function, the system automatically turns the taillight and headlight on if the brightness is below the regular level and turns the taillight and headlight off when the surroundings become brighter than the regular level.

: Parts Location

Code		See Page	Code	See Page	Code		See Page
A39		36	C12	37	J15		38
B5	B	36	D12	40	J18	A	38
B6	C	36	J5	38	J19	B	38

: Relay Blocks

Code	See Page	Relay Blocks (Relay Block Location)
2	22	Engine Room R/B (Engine Compartment Left)

: Junction Block and Wire Harness Connector

Code	See Page	Junction Block and Wire Harness (Connector Location)
1B	24	Engine Room Main Wire and Driver Side J/B (Lower Finish Panel)
1C		
1H	25	Instrument Panel Wire and Driver Side J/B (Lower Finish Panel)

: Connector Joining Wire Harness and Wire Harness

Code	See Page	Joining Wire Harness and Wire Harness (Connector Location)
IG1	46	Instrument Panel No.2 Wire and Instrument Panel Wire (Behind the Combination Meter)
IH1	46	Instrument Panel Wire and Instrument Panel Wire (Behind the Combination Meter)

: Ground Points

Code	See Page	Ground Points Location
IG	46	Left Kick Panel

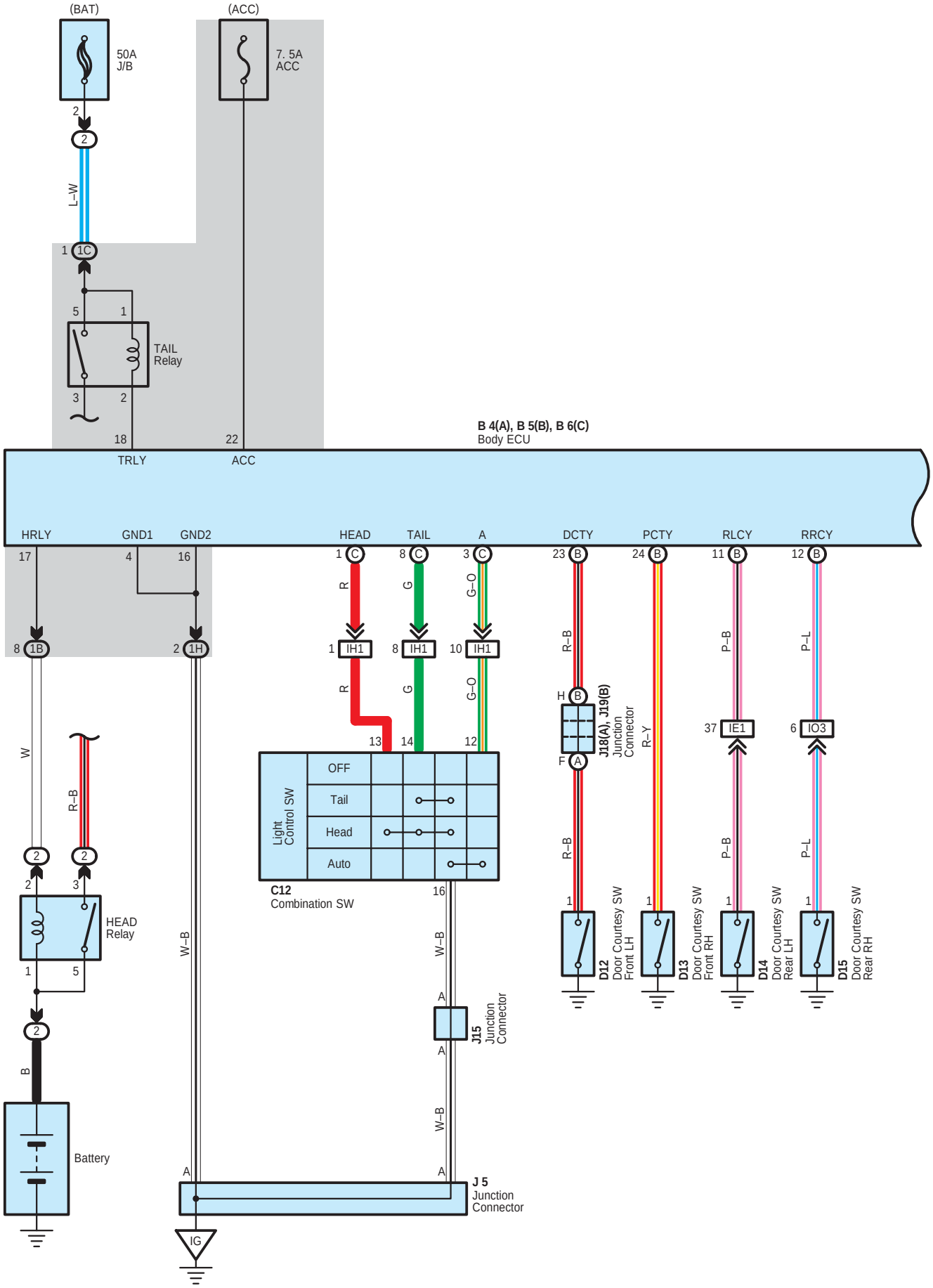
(BAT)
(ACC)
50A
J/B
7. 5A
ACC
L–W
1C
TAIL
Relay
TRLY
ACC
B 4(A), B 5(B), B 6(C)
Body ECU
HRLY
GND1
GND2
HEAD
TAIL
A
DCTY
PCTY
RLCY
RRCY
1B
1H
IH1
R
G
G–O
R–B
P–B
P–L
R–Y
W
W–B
B
OFF
Tail
Head
Auto
Light
Control SW
C12
Combination SW
J18(A), J19(B)
Junction
Connector
J15
Junction
Connector
J 5
Junction
Connector
D12
Door Courtesy SW
Front LH
D13
Door Courtesy SW
Front RH
D14
Door Courtesy SW
Rear LH
D15
Door Courtesy SW
Rear RH
IE1
IO3
HEAD
Relay
Battery
IG

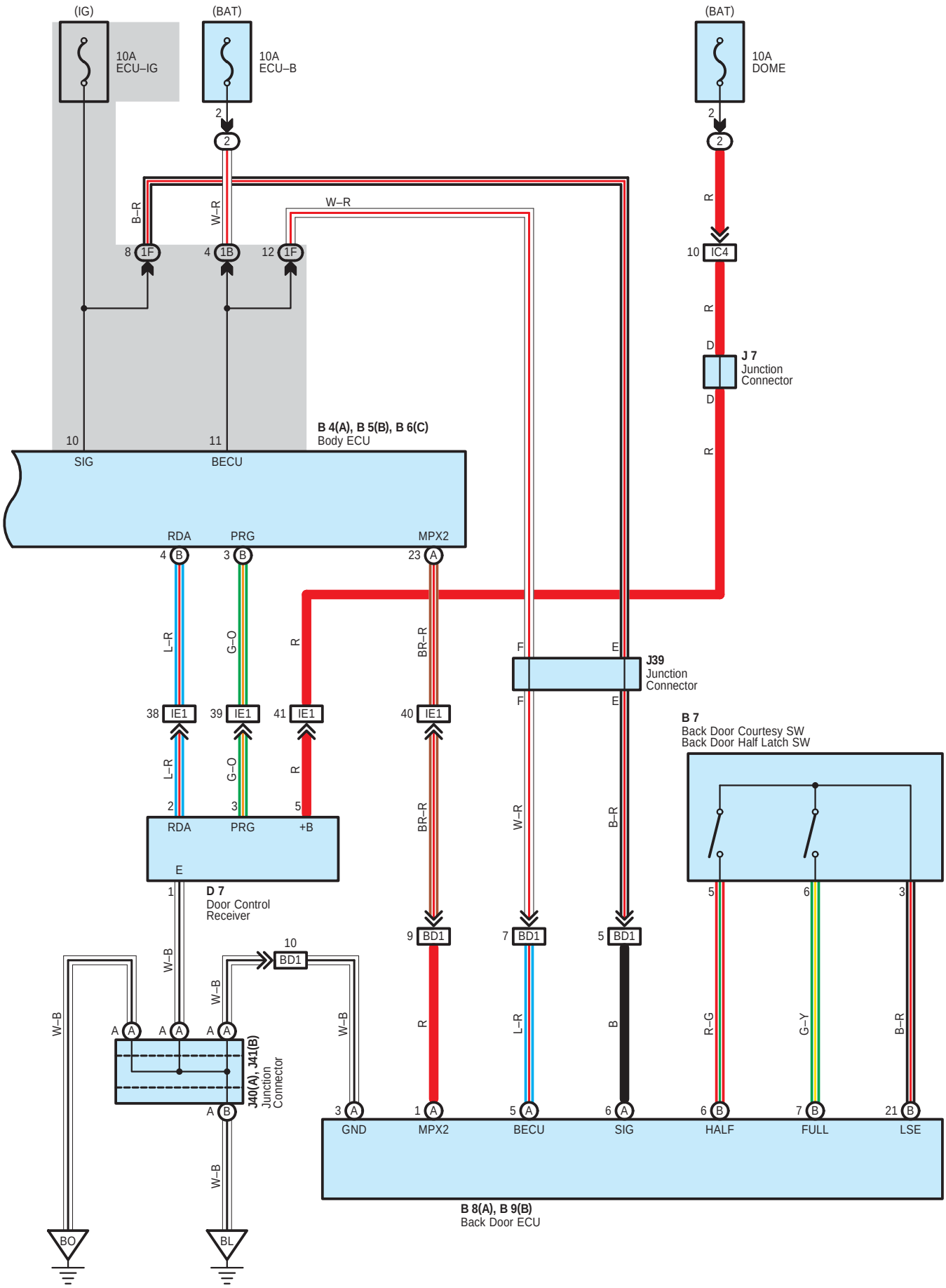
(IG)
(BAT)
(BAT)
10A
ECU–IG
10A
ECU–B
10A
DOME
2
2
2
B–R
W–R
W–R
R
8 1F
4 1B
12 1F
10 IC4
R
D
J 7
Junction
Connector
D
R
10
11
B 4(A), B 5(B), B 6(C)
Body ECU
SIG
BECU
RDA
PRG
MPX2
4 B
3 B
23 A
L–R
G–O
R
BR–R
F
E
J39
Junction
Connector
F
E
38 IE1
39 IE1
41 IE1
40 IE1
B 7
Back Door Courtesy SW
Back Door Half Latch SW
L–R
G–O
R
BR–R
W–R
B–R
2
3
5
RDA
PRG
+B
E
1
D 7
Door Control
Receiver
W–B
10
BD1
9 BD1
7 BD1
5 BD1
5
6
3
W–B
W–B
W–B
R
L–R
B
R–G
G–Y
B–R
A A A A
J40(A), J41(B)
Junction
Connector
A B
3 A
1 A
5 A
6 A
6 B
7 B
21 B
GND
MPX2
BECU
SIG
HALF
FULL
LSE
B 8(A), B 9(B)
Back Door ECU
W–B
W–B
BO
BL

Light Auto Turn Off System

System Outline

When all doors are closed after opening some or all of them after the Ignition SW is turned from ON to OFF with the head and tail lamps ON, these lamps will remain ON for 30 seconds after the doors are closed and then go OUT automatically. Pressing the lock SW on a wireless controller twice in succession turns OFF the lamps instantly.

: Parts Location

Code		See Page	Code	See Page	Code		See Page
B4	A	36	D7	40	J15		38
B5	B	36	D12	40	J18	A	38
B6	C	36	D13	40	J19	B	38
B7		40	D14	40	J39		40
B8	A	40	D15	40	J40	A	40
B9	B	40	J5	38	J41	B	40
C12		37	J7	38			

: Relay Blocks

Code	See Page	Relay Blocks (Relay Block Location)
2	22	Engine Room R/B (Engine Compartment Left)

: Junction Block and Wire Harness Connector

Code	See Page	Junction Block and Wire Harness (Connector Location)
1B	24	Engine Room Main Wire and Driver Side J/B (Lower Finish Panel)
1C		
1F	24	Floor No.2 Wire and Driver Side J/B (Lower Finish Panel)
1H	25	Instrument Panel Wire and Driver Side J/B (Lower Finish Panel)

: Connector Joining Wire Harness and Wire Harness

Code	See Page	Joining Wire Harness and Wire Harness (Connector Location)
IC4	46	Instrument Panel Wire and Engine Room Main Wire (Left Kick Panel)
IE1	46	Instrument Panel Wire and Floor No.2 Wire (Left Kick Panel)
IH1	46	Instrument Panel Wire and Instrument Panel Wire (Behind the Combination Meter)
IO3	47	Instrument Panel Wire and Floor Wire (Right Kick Panel)
BD1	48	Back Door No.1 Wire and Floor No.2 Wire (Left Rear Side of Roof)

: Ground Points

Code	See Page	Ground Points Location
IG	46	Left Kick Panel
BL	48	Floor Seat Crossmember LH
BO	48	Rear Pillar LH

Turn Signal and Hazard Warning Light with DRL

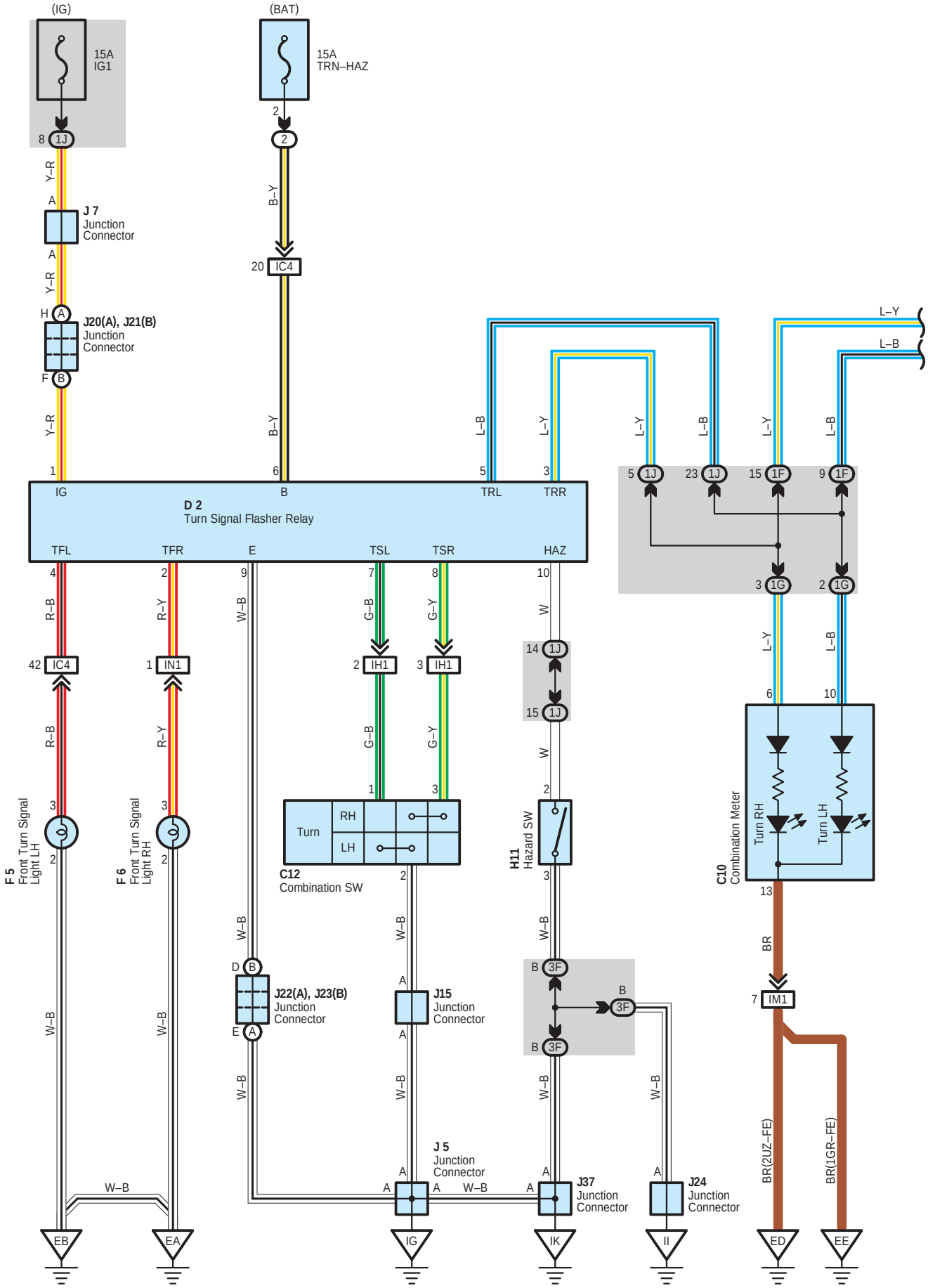

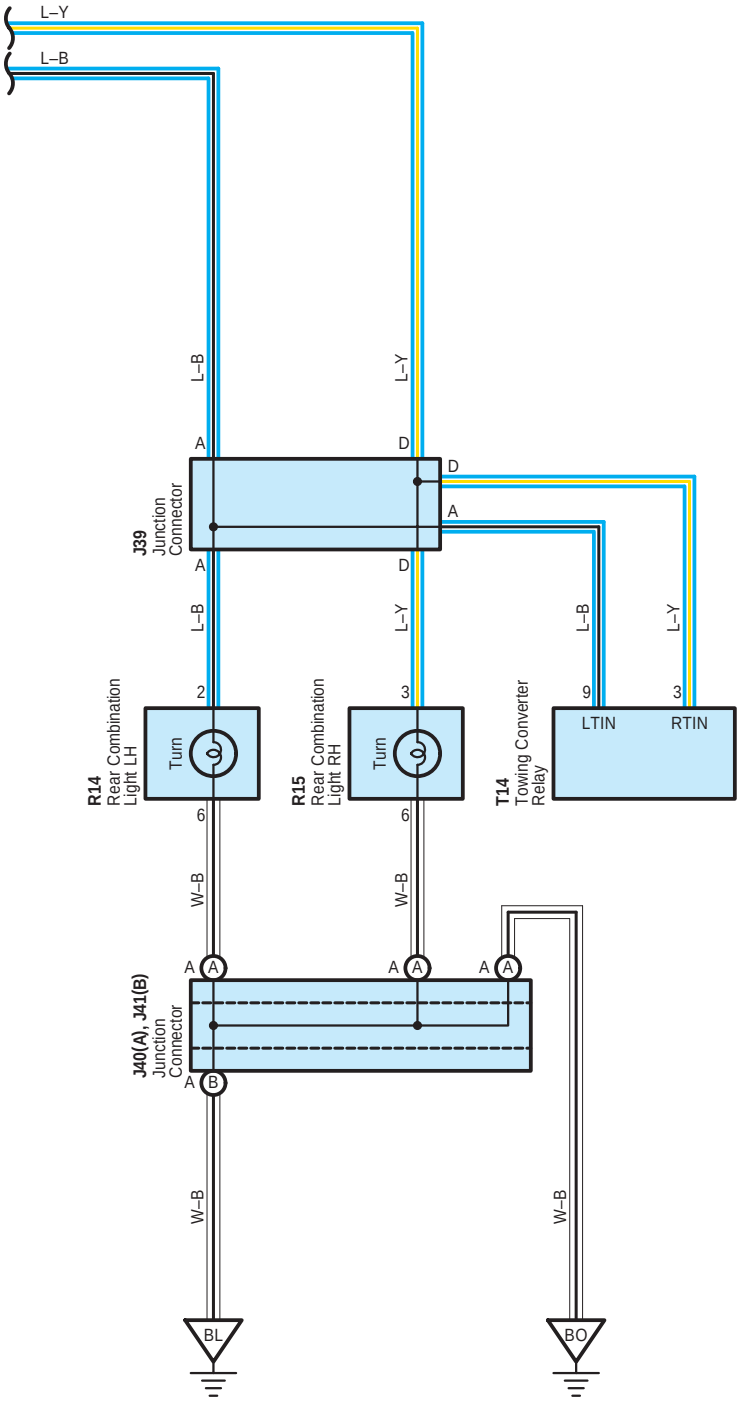
L–Y
L–B
L–B
L–Y
A
D
D
A
J39
Junction
Connector
A
D
L–B
L–Y
L–B
L–Y
2
3
9
3
R14
Rear Combination
Light LH
Turn
R15
Rear Combination
Light RH
Turn
T14
Towing Converter
Relay
LTIN
RTIN
6
6
W–B
W–B
A
A
A
A
A
A
J40(A), J41(B)
Junction
Connector
A
B
W–B
W–B
BL
BO

Turn Signal and Hazard Warning Light with DRL

: Parts Location

Code	See Page	Code	See Page	Code	See Page
C10	37	J5	38	J37	38
C12	37	J7	38	J39	40
D2	37	J15	38	J40 A	40
F5	32 (2UZ–FE)	J20 A	38	J41 B	40
	34 (1GR–FE)	J21 B	38	R14	41
F6	32 (2UZ–FE)	J22 A	38	R15	41
	34 (1GR–FE)	J23 B	38	T14	41
H11	37	J24	38		

: Relay Blocks

Code	See Page	Relay Blocks (Relay Block Location)
2	22	Engine Room R/B (Engine Compartment Left)

: Junction Block and Wire Harness Connector

Code	See Page	Junction Block and Wire Harness (Connector Location)
1F	24	Floor No.2 Wire and Driver Side J/B (Lower Finish Panel)
1G	25	Instrument Panel Wire and Driver Side J/B (Lower Finish Panel)
1J		
3F	28	Instrument Panel Wire and Center J/B (Instrument Panel Brace RH)

: Connector Joining Wire Harness and Wire Harness

Code	See Page	Joining Wire Harness and Wire Harness (Connector Location)
IC4	46	Instrument Panel Wire and Engine Room Main Wire (Left Kick Panel)
IH1	46	Instrument Panel Wire and Instrument Panel Wire (Behind the Combination Meter)
IM1	47	Engine Wire and Instrument Panel Wire (Right Side of Blower Unit)
IN1	47	Instrument Panel Wire and Engine Room Main Wire (Right Kick Panel)

: Ground Points

Code	See Page	Ground Points Location
EA	44 (2UZ–FE)	Front Right Fender
	45 (1GR–FE)	
EB	44 (2UZ–FE)	Front Left Fender
	45 (1GR–FE)	
ED	44 (2UZ–FE)	Left Bank Cylinder Head
EE	44 (2UZ–FE)	Rear Side of Cylinder Block
	45 (1GR–FE)	Rear Side of Right Bank Cylinder Block
IG	46	Left Kick Panel
II	46	Instrument Panel Brace RH
IK	46	Right Kick Panel
BL	48	Floor Seat Crossmember LH
BO	48	Rear Pillar LH

Turn Signal and Hazard Warning Light without DRL

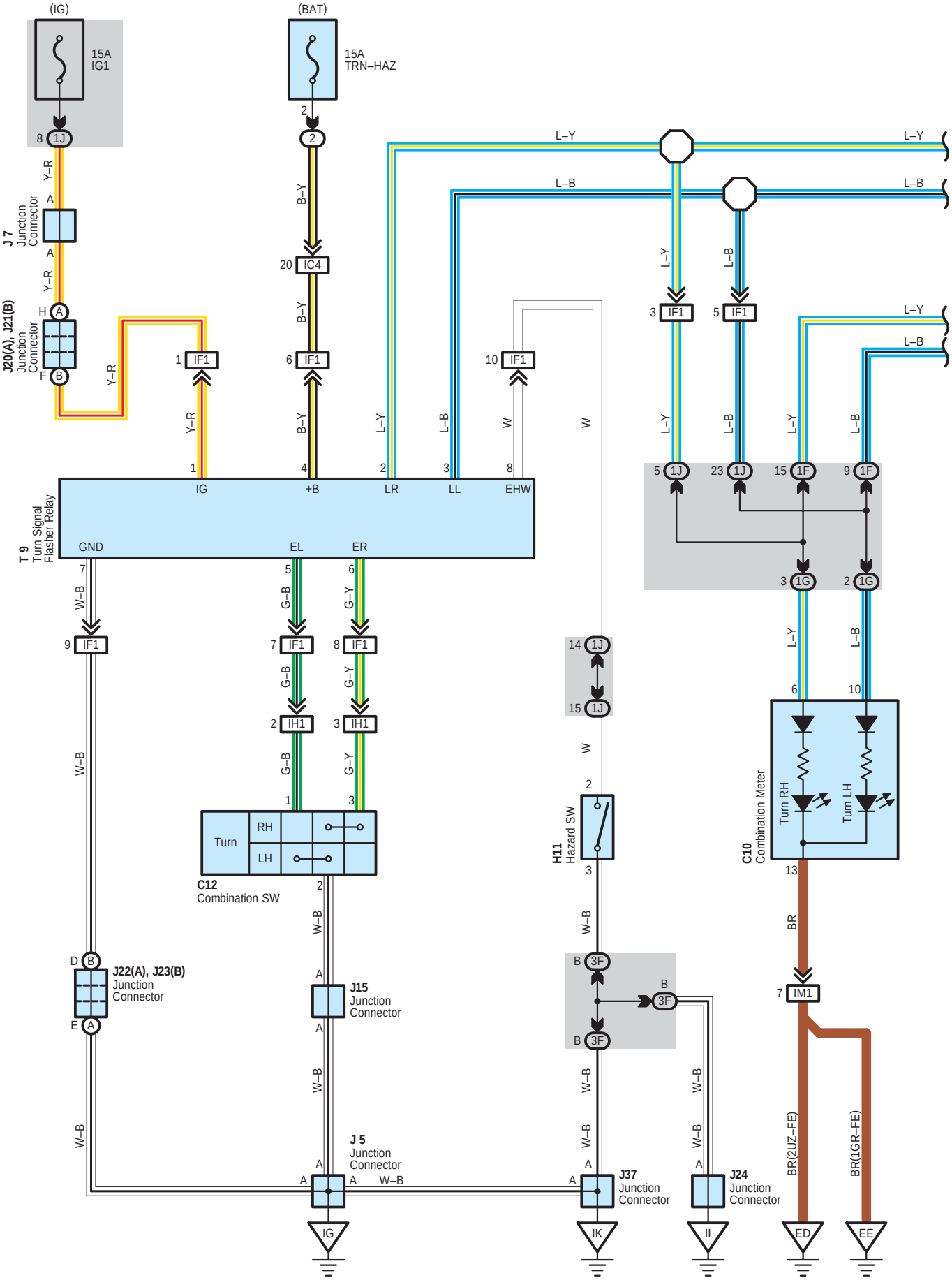

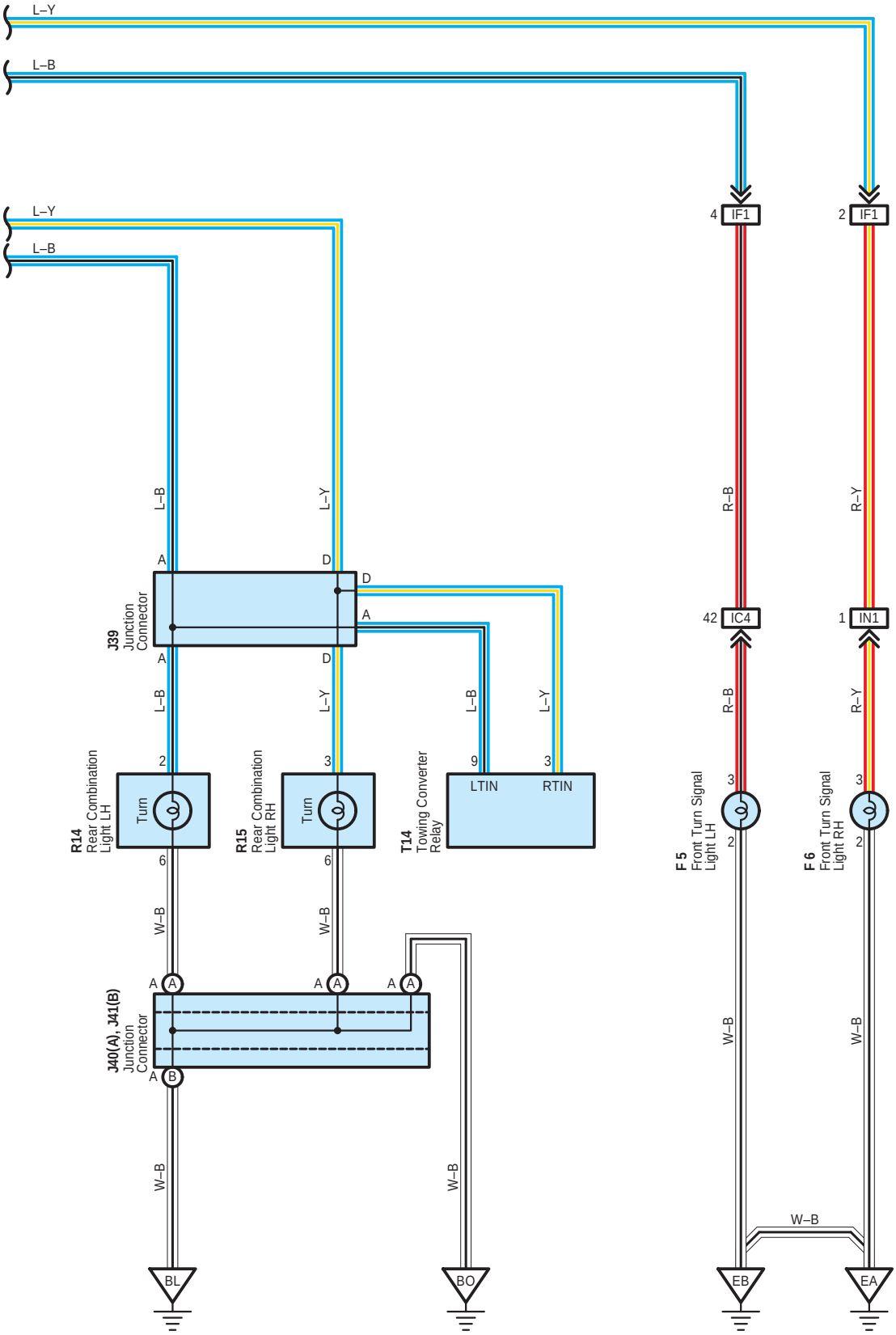
L–Y
L–B
L–Y
L–B
4 IF1
2 IF1
R–B
R–Y
42 IC4
1 IN1
R–B
R–Y
L–B
L–Y
A
D
D
A
D
A
J39
Junction
Connector
L–B
L–Y
L–B
L–Y
2
3
9
3
R14
Rear Combination
Light LH
Turn
R15
Rear Combination
Light RH
Turn
T14
Towing Converter
Relay
LTIN
RTIN
F 5
Front Turn Signal
Light LH
F 6
Front Turn Signal
Light RH
3
2
3
2
6
6
W–B
W–B
W–B
W–B
A A
A A
A A
J40(A), J41(B)
Junction
Connector
A B
W–B
W–B
W–B
BL
BO
EB
EA

Turn Signal and Hazard Warning Light without DRL

: Parts Location

Code	See Page	Code	See Page	Code	See Page
C10	37	J7	38	J39	40
C12	37	J15	38	J40 A	40
F5	32 (2UZ–FE)	J20 A	38	J41 B	40
	34 (1GR–FE)	J21 B	38	R14	41
F6	32 (2UZ–FE)	J22 A	38	R15	41
	34 (1GR–FE)	J23 B	38	T9	39
H11	37	J24	38	T14	41
J5	38	J37	38		

: Relay Blocks

Code	See Page	Relay Blocks (Relay Block Location)
2	22	Engine Room R/B (Engine Compartment Left)

: Junction Block and Wire Harness Connector

Code	See Page	Junction Block and Wire Harness (Connector Location)
1F	24	Floor No.2 Wire and Driver Side J/B (Lower Finish Panel)
1G	25	Instrument Panel Wire and Driver Side J/B (Lower Finish Panel)
1J		
3F	28	Instrument Panel Wire and Center J/B (Instrument Panel Brace RH)

: Connector Joining Wire Harness and Wire Harness

Code	See Page	Joining Wire Harness and Wire Harness (Connector Location)
IC4	46	Instrument Panel Wire and Engine Room Main Wire (Left Kick Panel)
IF1	46	Instrument Panel Wire and Relay Wire (Behind the Instrument Panel J/B)
IH1	46	Instrument Panel Wire and Instrument Panel Wire (Behind the Combination Meter)
IM1	47	Engine Wire and Instrument Panel Wire (Right Side of Blower Unit)
IN1	47	Instrument Panel Wire and Engine Room Main Wire (Right Kick Panel)

: Ground Points

Code	See Page	Ground Points Location
EA	44 (2UZ–FE)	Front Right Fender
	45 (1GR–FE)	
EB	44 (2UZ–FE)	Front Left Fender
	45 (1GR–FE)	
ED	44 (2UZ–FE)	Left Bank Cylinder Head
EE	44 (2UZ–FE)	Rear Side of Cylinder Block
	45 (1GR–FE)	Rear Side of Right Bank Cylinder Block
IG	46	Left Kick Panel
II	46	Instrument Panel Brace RH
IK	46	Right Kick Panel
BL	48	Floor Seat Crossmember LH
BO	48	Rear Pillar LH

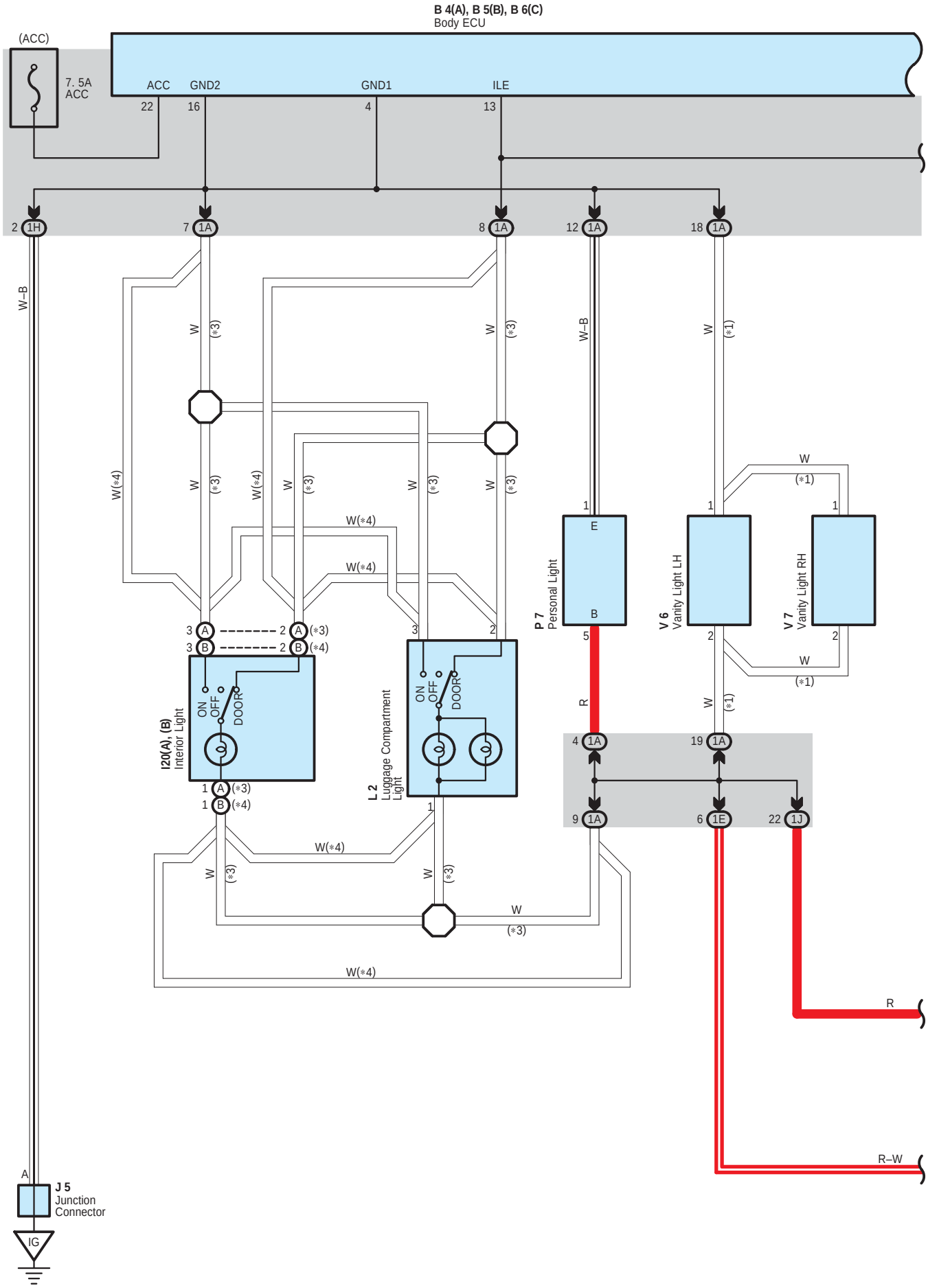
B 4(A), B 5(B), B 6(C)
Body ECU
(ACC)
7. 5A
ACC
ACC
GND2
GND1
ILE
22
16
4
13
2 1H
7 1A
8 1A
12 1A
18 1A
W–B
W
(*3)
W(*4)
(*1)
P 7
Personal Light
E
B
V 6
Vanity Light LH
V 7
Vanity Light RH
R
I20(A), (B)
Interior Light
ON
OFF
DOOR
L 2
Luggage Compartment
Light
4 1A
19 1A
9 1A
6 1E
22 1J
R
R–W
A
J 5
Junction
Connector
IG

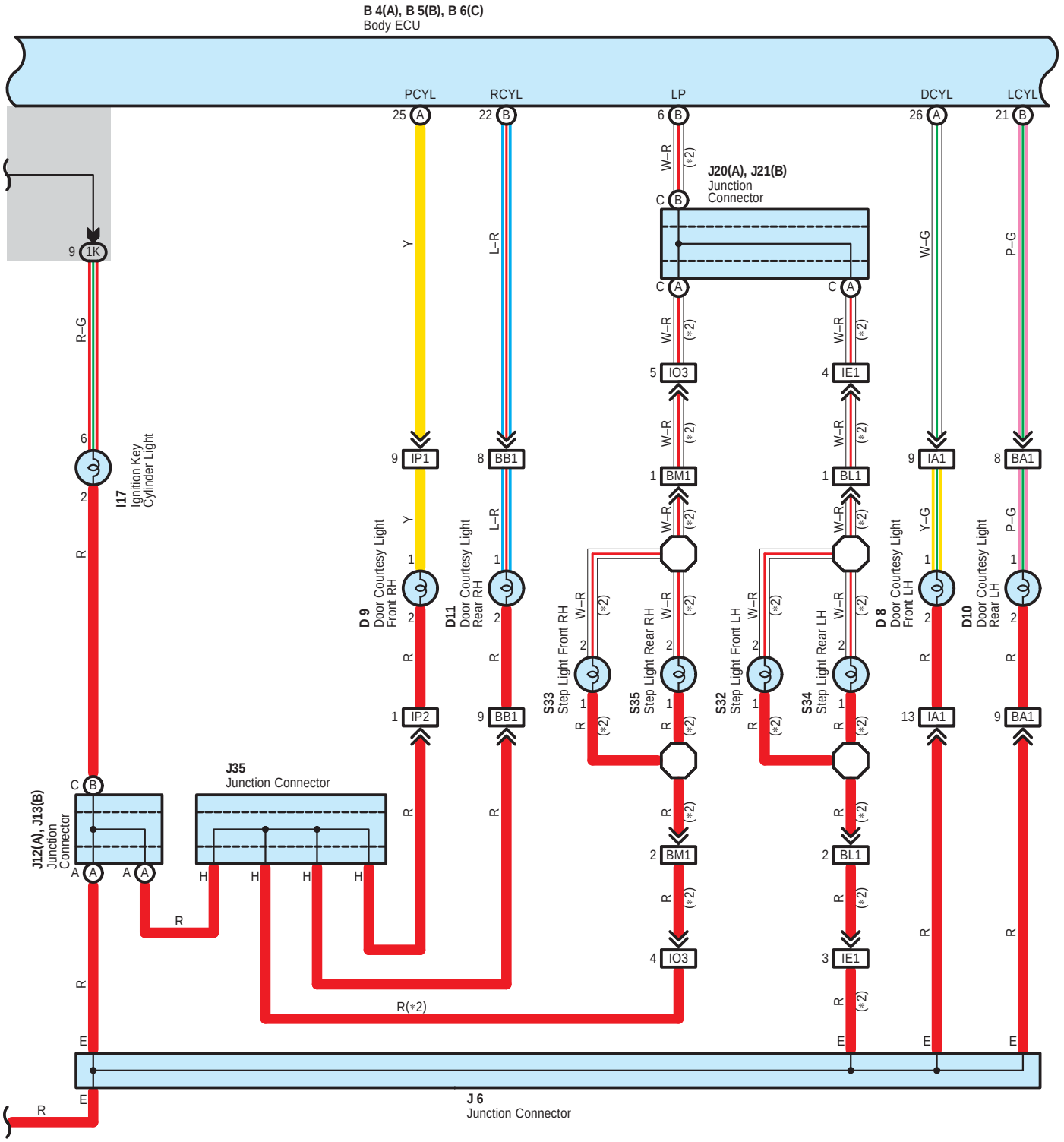

* 1 : w/ Vanity Light
* 2 : Limited
* 3 : w/ Rear Seat Entertainment System
* 4 : w/o Rear Seat Entertainment System



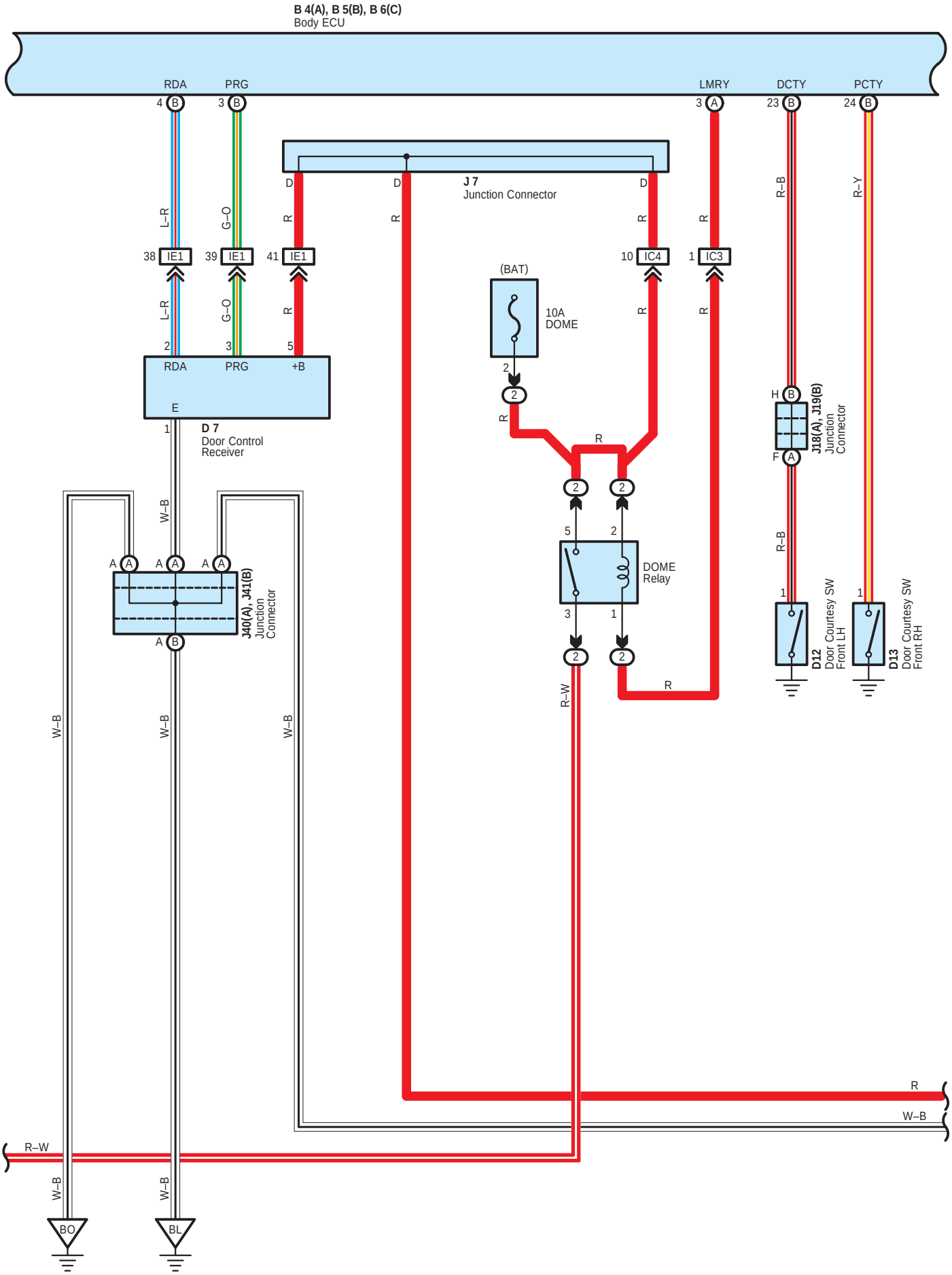
B 4(A), B 5(B), B 6(C)
Body ECU
RDA
PRG
LMRY
DCTY
PCTY
4 B
3 B
3 A
23 B
24 B
L–R
G–O
R
R–B
R–Y
38 IE1
39 IE1
41 IE1
10 IC4
1 IC3
J 7
Junction Connector
D
(BAT)
10A
DOME
2
RDA
PRG
+B
E
1
D 7
Door Control
Receiver
W–B
H B
F A
J18(A), J19(B)
Junction
Connector
A A A A
A B
J40(A), J41(B)
Junction
Connector
5
3
1
DOME
Relay
R–W
D12
Door Courtesy SW
Front LH
D13
Door Courtesy SW
Front RH
BO
BL

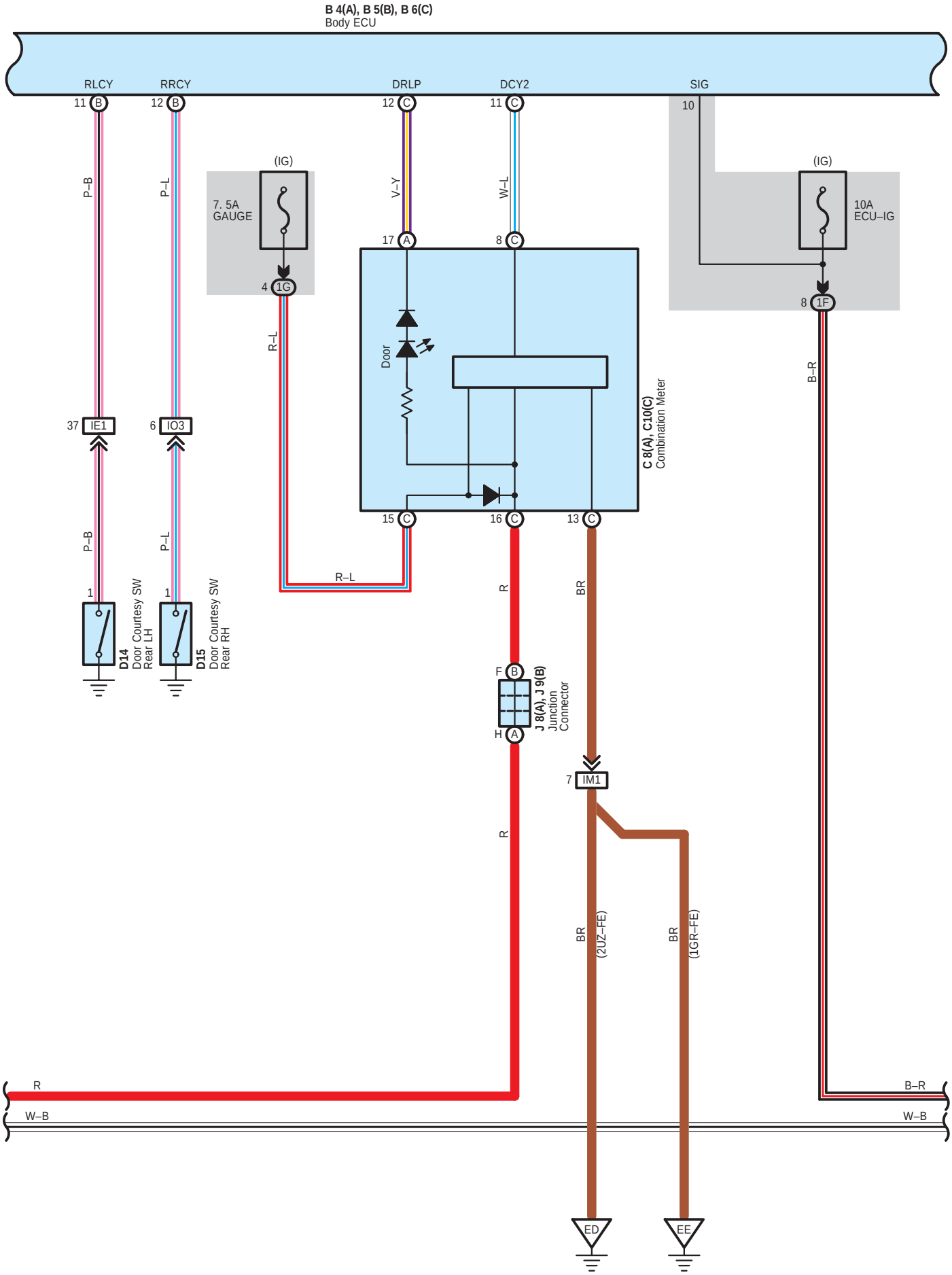
B 4(A), B 5(B), B 6(C)
Body ECU
RLCY
RRCY
DRLP
DCY2
SIG
11 B
12 B
12 C
11 C
10
P–B
P–L
V–Y
W–L
(IG)
7. 5A
GAUGE
4 1G
17 A
8 C
Door
C 8(A), C10(C)
Combination Meter
(IG)
10A
ECU–IG
8 1F
R–L
B–R
37 IE1
6 IO3
15 C
16 C
13 C
1
D14
Door Courtesy SW
Rear LH
D15
Door Courtesy SW
Rear RH
R
BR
F B
H A
J 8(A), J 9(B)
Junction
Connector
7 IM1
BR
(2UZ–FE)
BR
(1GR–FE)
R
W–B
B–R
W–B
ED
EE

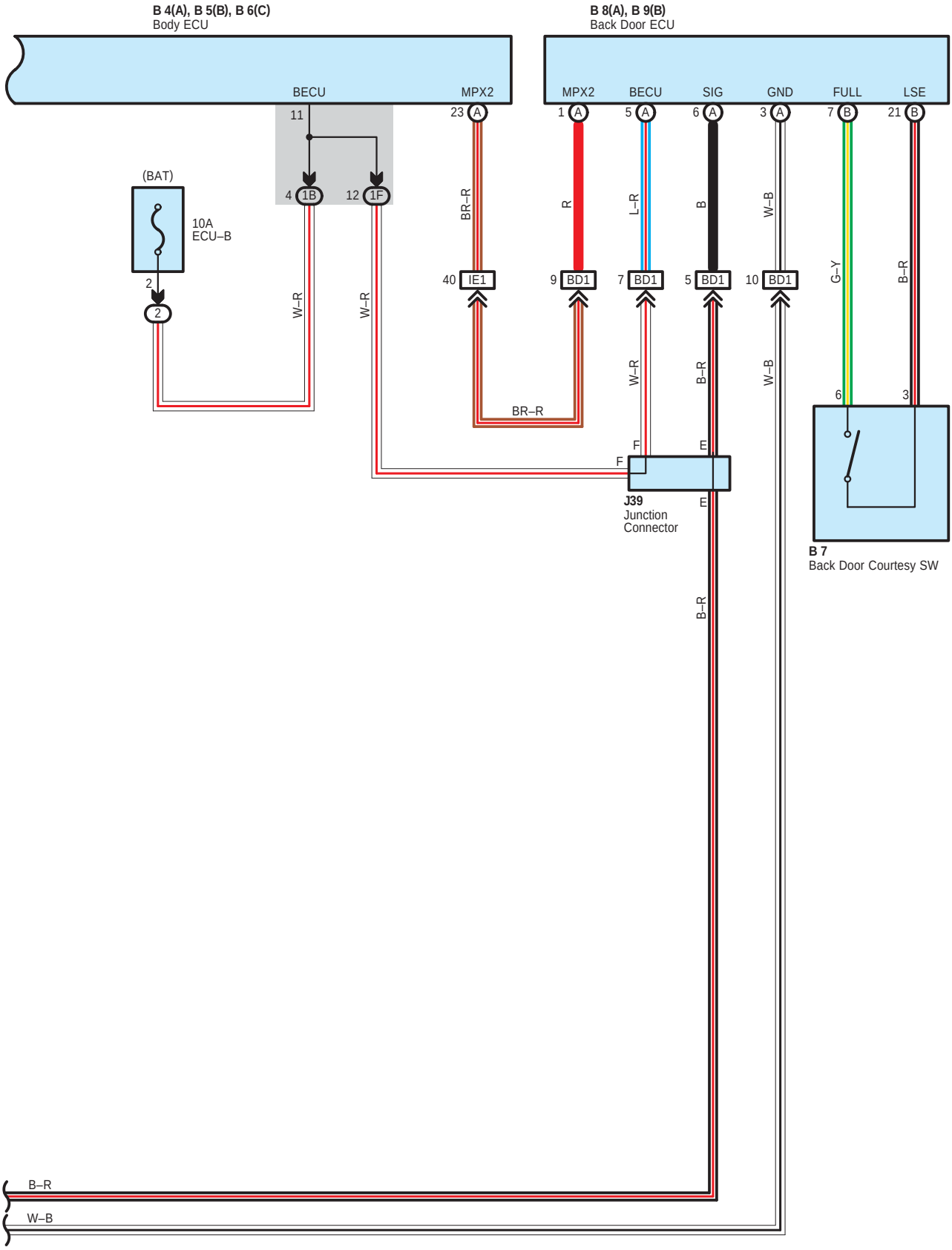
B 4(A), B 5(B), B 6(C)
Body ECU
B 8(A), B 9(B)
Back Door ECU
BECU
MPX2
MPX2
BECU
SIG
GND
FULL
LSE
11
23 A
1 A
5 A
6 A
3 A
7 B
21 B
(BAT)
4 1B
12 1F
10A
ECU–B
2
2
BR–R
R
L–R
B
W–B
G–Y
B–R
40 IE1
9 BD1
7 BD1
5 BD1
10 BD1
W–R
W–R
BR–R
W–R
B–R
W–B
6
3
F
E
F
J39
Junction
Connector
E
B 7
Back Door Courtesy SW
B–R
B–R
W–B

System Outline

The interior light is controlled by the body ECU. This system has following features.

1. Normal Operation

* When one of the doors opened, the interior light, luggage compartment light and open door warning light is turned on. When the all doors are closed, the interior light, luggage compartment light and open door warning light is turned off.

2. Illuminated Entry System

* When a door is unlocked through a key operation or transmitter operation, or if a door is opened or closed, the illuminated entry system turns ON the interior light and the ignition key illumination.
* If the ignition switch is turned to the ACC or ON position or if all doors are locked during the 15 seconds in which these lights are ON, they will immediately turn OFF.

○ : Parts Location

Code	See Page	Code	See Page	Code	See Page
B4 A	36	D14	40	J21 B	38
B5 B	36	D15	40	J35	38
B6 C	36	I17	37	J39	40
B7	40	I20 A	40	J40 A	40
B8 A	40	I20 B	40	J41 B	40
B9 B	40	J5	38	L2	40
C8 A	37	J6	38	P7	41
C10 C	37	J7	38	S32	41
D7	40	J8 A	38	S33	41
D8	40	J9 B	38	S34	41
D9	40	J12 A	38	S35	41
D10	40	J13 B	38	V6	41
D11	40	J18 A	38	V7	41
D12	40	J19 B	38		
D13	40	J20 A	38		

▭ : Relay Blocks

Code	See Page	Relay Blocks (Relay Block Location)
2	22	Engine Room R/B (Engine Compartment Left)

▭ : Junction Block and Wire Harness Connector

Code	See Page	Junction Block and Wire Harness (Connector Location)
1A	24	Roof Wire and Driver Side J/B (Lower Finish Panel)
1B	24	Engine Room Main Wire and Driver Side J/B (Lower Finish Panel)
1E		
1F	24	Floor No.2 Wire and Driver Side J/B (Lower Finish Panel)
1G	25	Instrument Panel Wire and Driver Side J/B (Lower Finish Panel)
1H		
1J		
1K		

: **Connector Joining Wire Harness and Wire Harness**

Code	See Page	Joining Wire Harness and Wire Harness (Connector Location)
IA1	46	Front Door LH Wire and Instrument Panel Wire (Left Kick Panel)
IC3	46	Instrument Panel Wire and Engine Room Main Wire (Left Kick Panel)
IC4		
IE1	46	Instrument Panel Wire and Floor No.2 Wire (Left Kick Panel)
IM1	47	Engine Wire and Instrument Panel Wire (Right Side of Blower Unit)
IO3	47	Instrument Panel Wire and Floor Wire (Right Kick Panel)
IP1	47	Front Door RH Wire and Instrument Panel Wire (Right Kick Panel)
IP2		
BA1	48	Rear Door No.2 Wire and Instrument Panel Wire (Left Center Pillar)
BB1	48	Rear Door No.1 Wire and Instrument Panel Wire (Right Center Pillar)
BD1	48	Back Door No.1 Wire and Floor No.2 Wire (Left Rear Side of Roof)
BL1	48	Floor No.2 Wire and Step Rear Floor LH Wire (Near the Side Step LH)
BM1	48	Floor Wire and Step Rear Floor RH Wire (Near the Side Step RH)

: **Ground Points**

Code	See Page	Ground Points Location
ED	44 (2UZ–FE)	Left Bank Cylinder Head
EE	44 (2UZ–FE)	Rear Side of Cylinder Block
	45 (1GR–FE)	Rear Side of Right Bank Cylinder Block
IG	46	Left Kick Panel
BL	48	Floor Seat Crossmember LH
BO	48	Rear Pillar LH

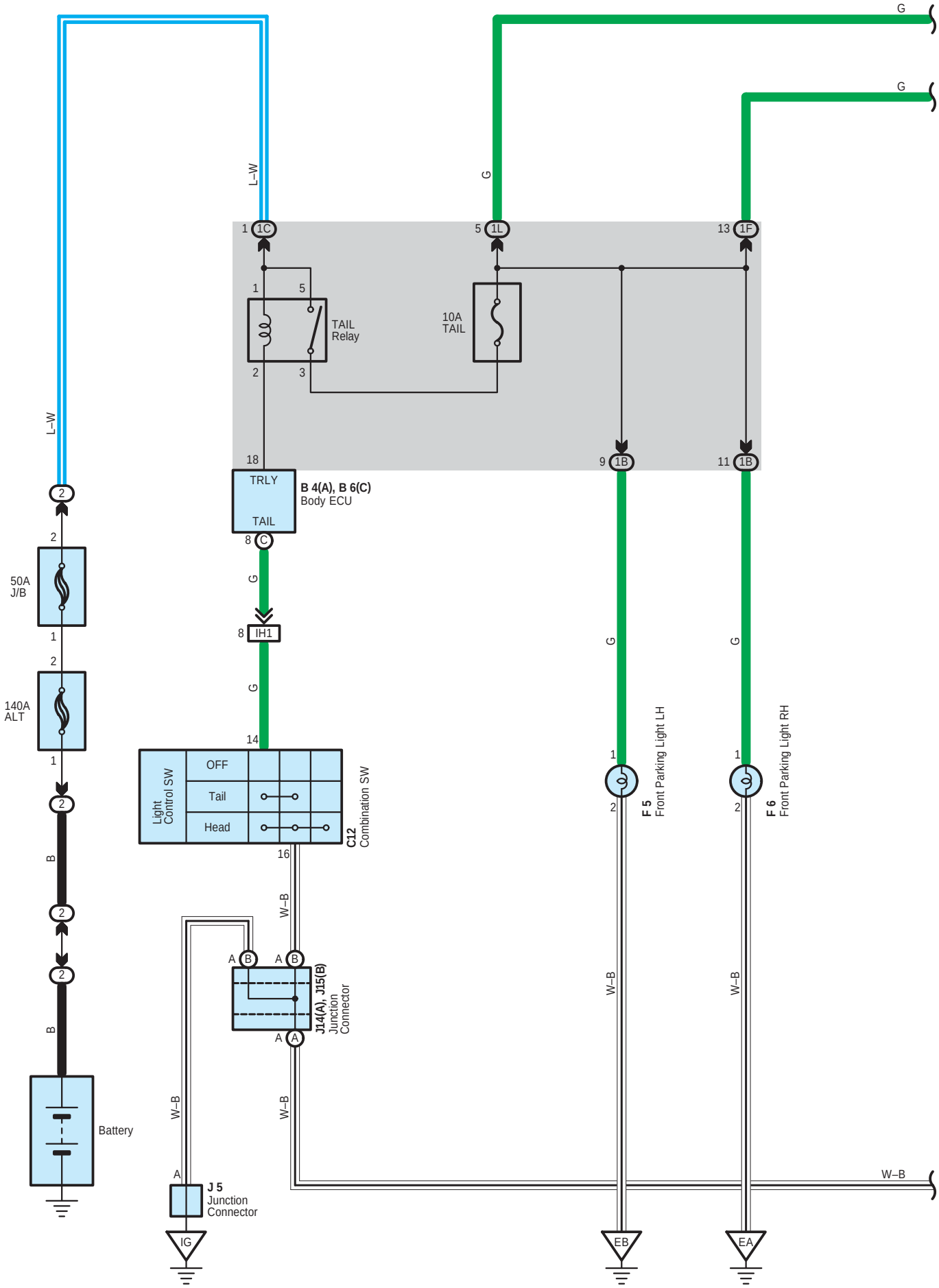
G
G
L–W
G
1 1C
5 1L
13 1F
1
5
TAIL
Relay
2
3
10A
TAIL
L–W
18
TRLY
TAIL
B 4(A), B 6(C)
Body ECU
9 1B
11 1B
2
2
50A
J/B
1
2
140A
ALT
1
8 C
G
8 IH1
G
14
G
G
1
2
F 5
Front Parking Light LH
1
2
F 6
Front Parking Light RH
OFF
Tail
Head
Light
Control SW
C12
Combination SW
16
2
B
2
2
B
2
W–B
A B
A B
J14(A), J15(B)
Junction
Connector
A A
W–B
W–B
W–B
W–B
W–B
A
J 5
Junction
Connector
Battery
IG
EB
EA

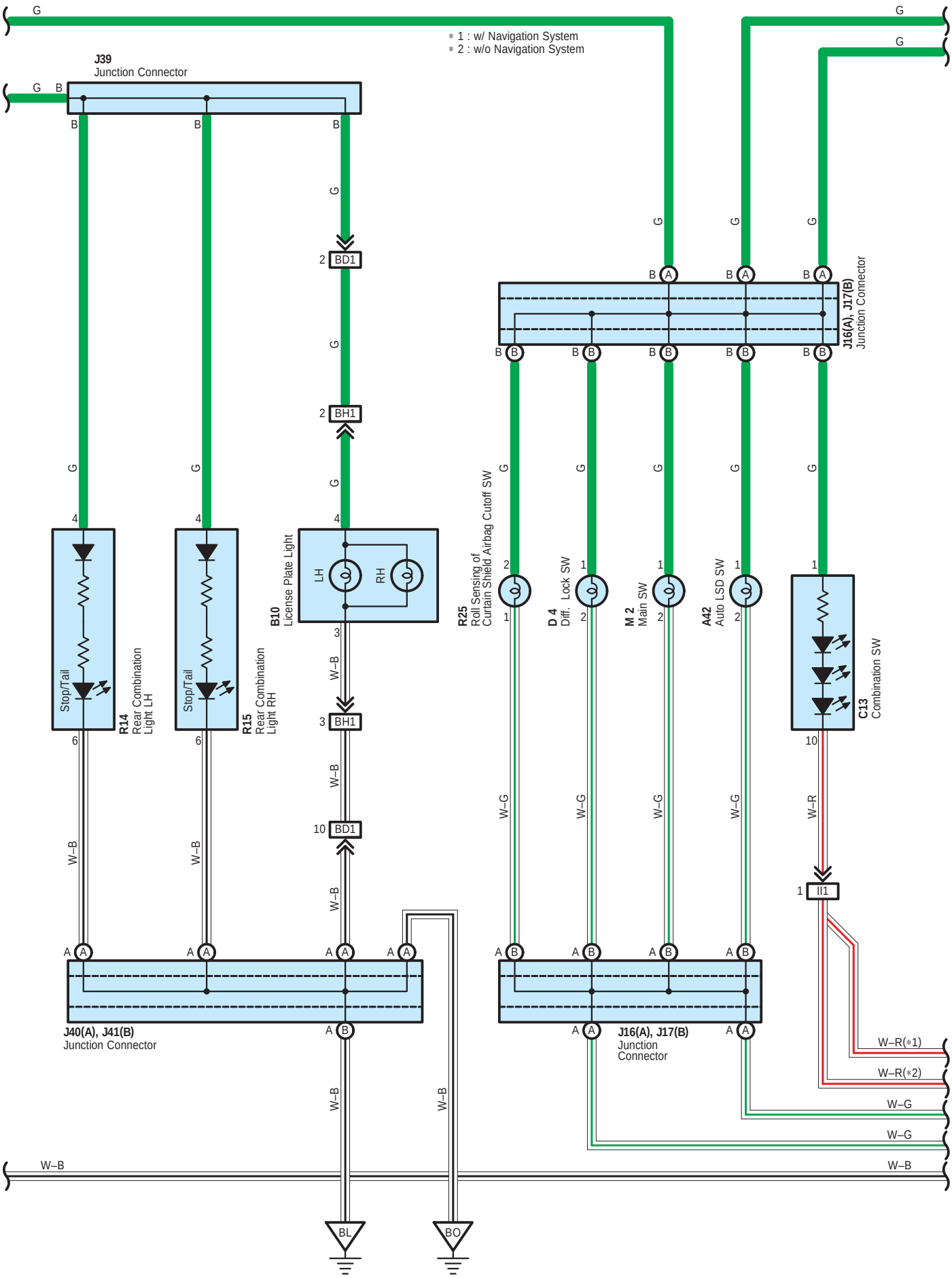
∗ 1 : w/ Navigation System
∗ 2 : w/o Navigation System
J39
Junction Connector
B10
License Plate Light
LH
RH
R14
Rear Combination
Light LH
Stop/Tail
R15
Rear Combination
Light RH
Stop/Tail
R25
Roll Sensing of
Curtain Shield Airbag Cutoff SW
D 4
Diff. Lock SW
M 2
Main SW
A42
Auto LSD SW
C13
Combination SW
J16(A), J17(B)
Junction Connector
J40(A), J41(B)
Junction Connector
J16(A), J17(B)
Junction
Connector
BD1
BH1
II1
G
W–B
W–G
W–R
W–R(∗1)
W–R(∗2)
BL
BO

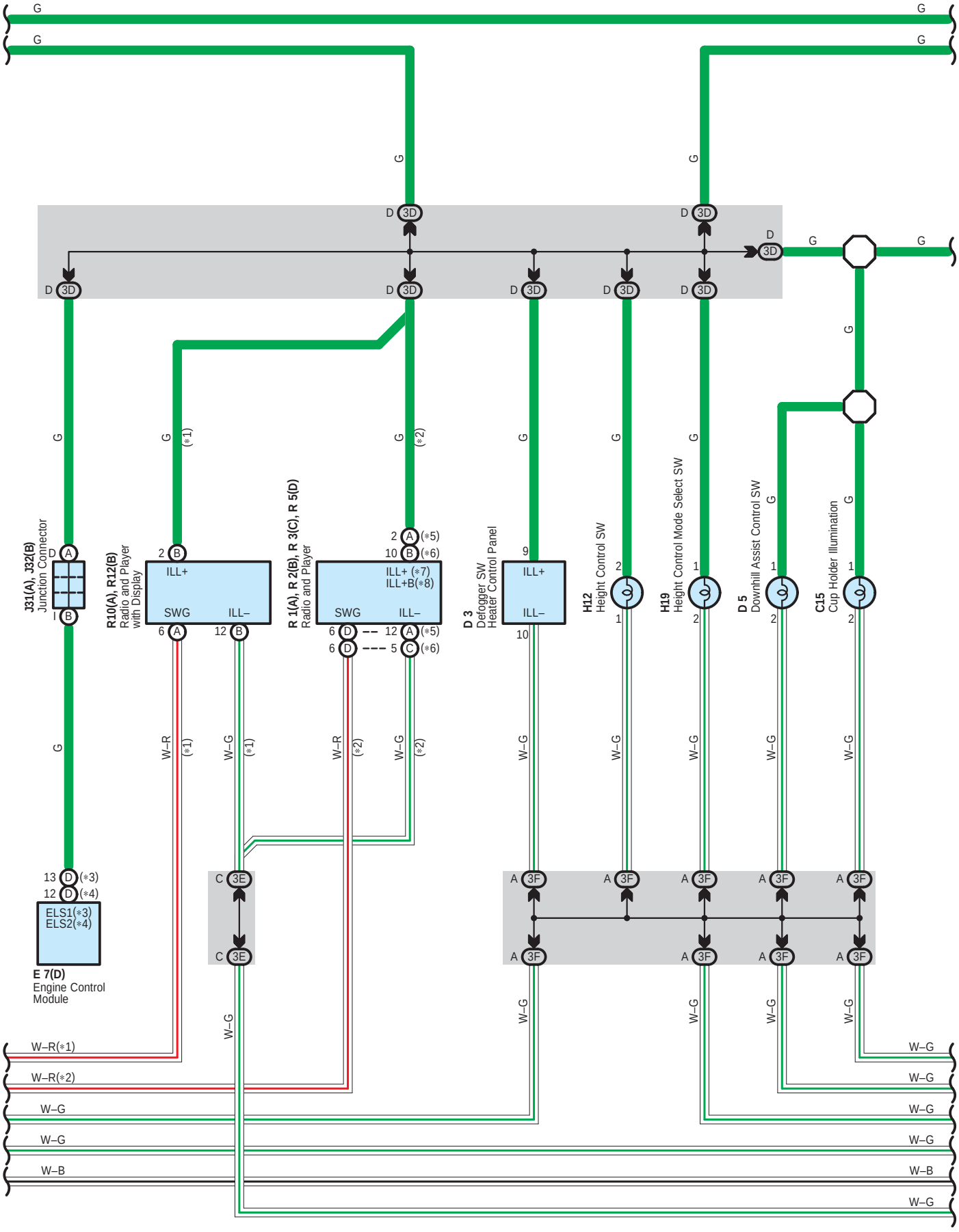
G
D 3D
J31(A), J32(B)
Junction Connector
R10(A), R12(B)
Radio and Player
with Display
ILL+
SWG
ILL–
R 1(A), R 2(B), R 3(C), R 5(D)
Radio and Player
ILL+ (*7)
ILL+B(*8)
D 3
Defogger SW
Heater Control Panel
H12
Height Control SW
H19
Height Control Mode Select SW
D 5
Downhill Assist Control SW
C15
Cup Holder Illumination
(*1)
(*2)
(*3)
(*4)
(*5)
(*6)
W–R
W–G
W–B
C 3E
A 3F
ELS1(*3)
ELS2(*4)
E 7(D)
Engine Control
Module
W–R(*1)
W–R(*2)
W–G
W–B

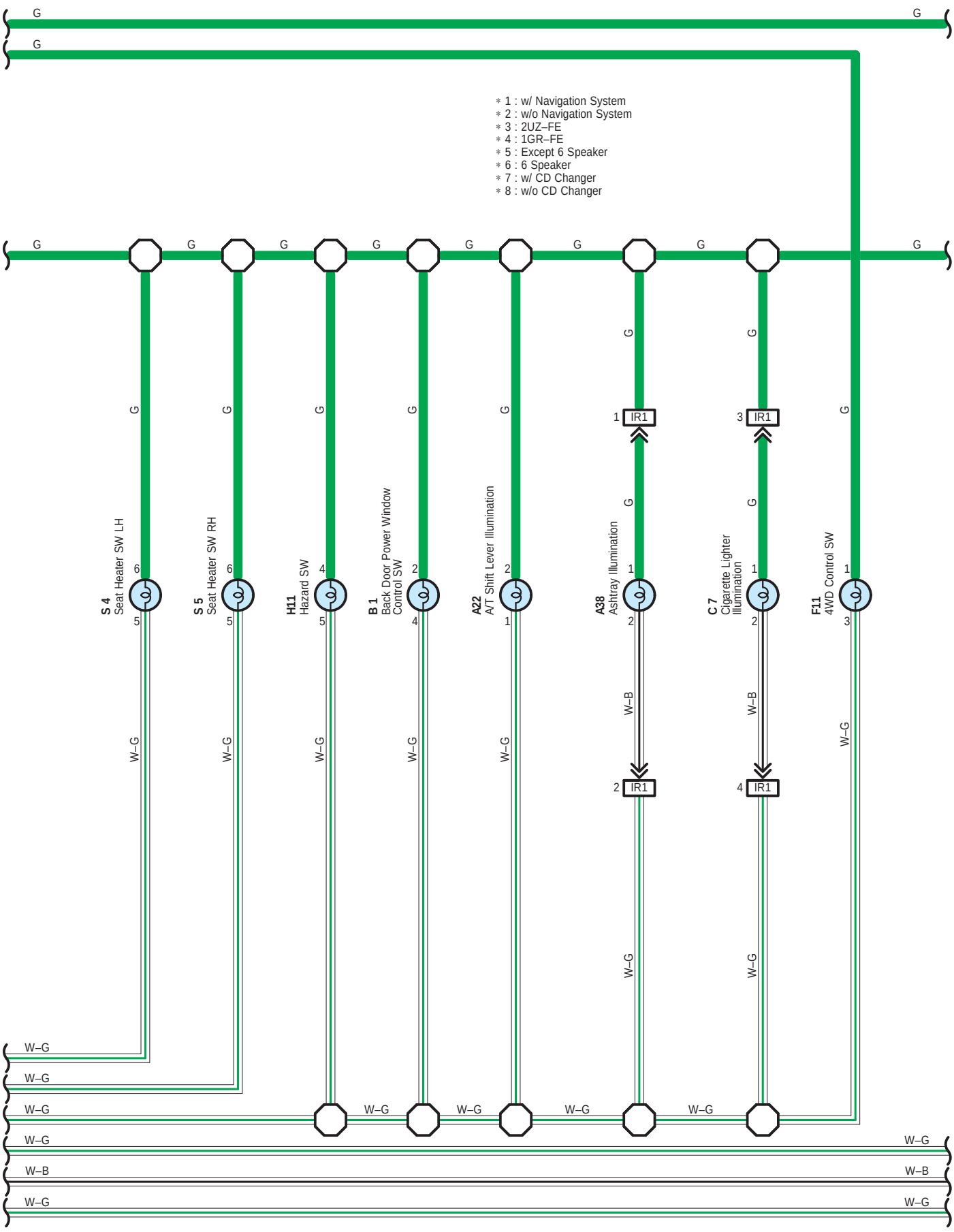
∗ 1 : w/ Navigation System
∗ 2 : w/o Navigation System
∗ 3 : 2UZ–FE
∗ 4 : 1GR–FE
∗ 5 : Except 6 Speaker
∗ 6 : 6 Speaker
∗ 7 : w/ CD Changer
∗ 8 : w/o CD Changer
S 4 Seat Heater SW LH
S 5 Seat Heater SW RH
H11 Hazard SW
B 1 Back Door Power Window Control SW
A22 A/T Shift Lever Illumination
A38 Ashtray Illumination
C 7 Cigarette Lighter Illumination
F11 4WD Control SW
IR1
G
W–G
W–B

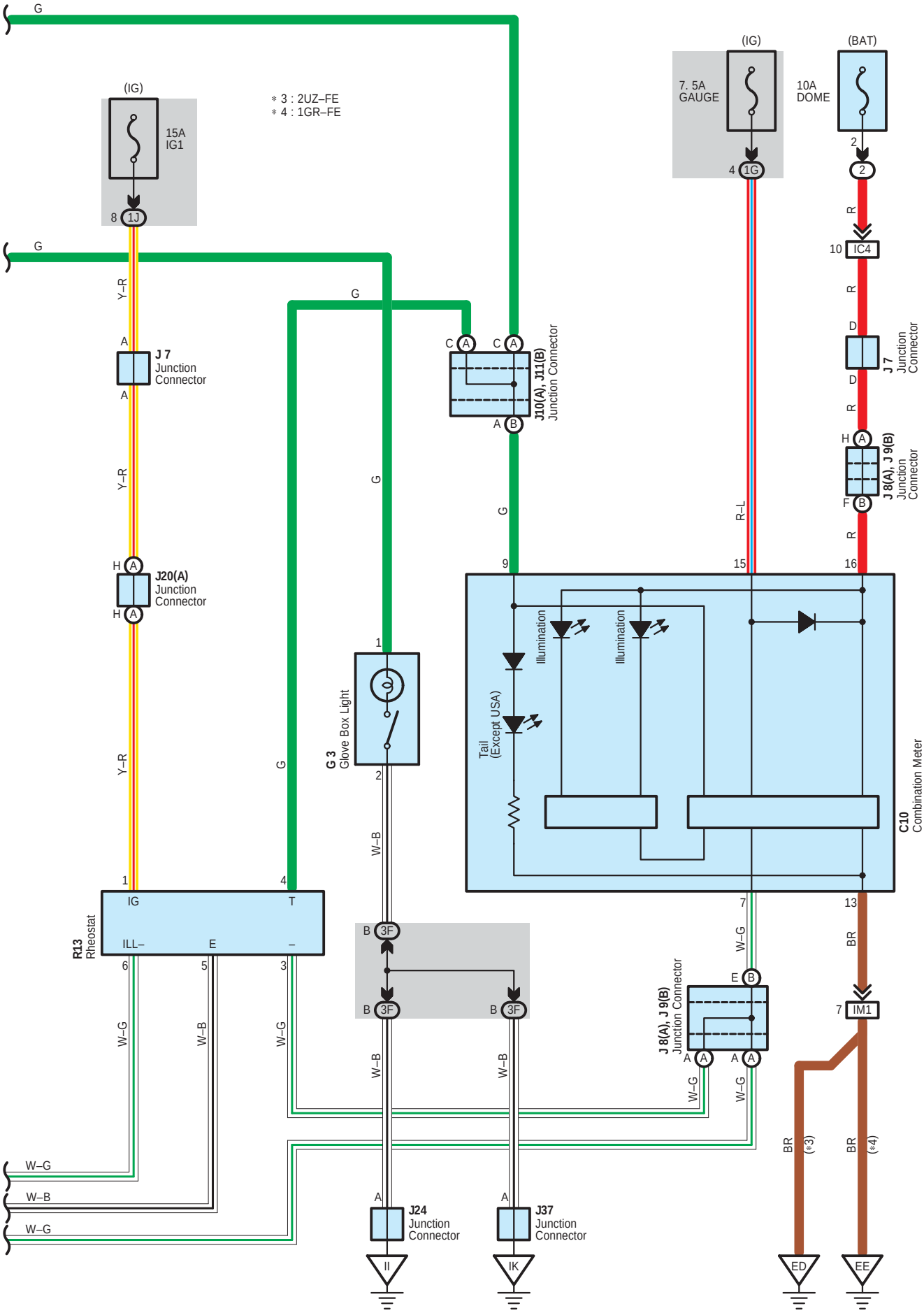
* 3 : 2UZ–FE
* 4 : 1GR–FE
(IG)
15A
IG1
8 1J
7. 5A
GAUGE
(IG)
4 1G
10A
DOME
(BAT)
2
2
R
10 IC4
R
D
J 7
Junction
Connector
D
R
H A
J 8(A), J 9(B)
Junction
Connector
F B
R
16
G
G
G
G
Y–R
Y–R
Y–R
A
J 7
Junction
Connector
A
C A
C A
J10(A), J11(B)
Junction Connector
A B
H A
J20(A)
Junction
Connector
H A
9
15
R–L
1
G 3
Glove Box Light
2
W–B
Illumination
Illumination
Tail
(Except USA)
C10
Combination Meter
1
4
IG
T
ILL–
E
–
R13
Rheostat
6
5
3
7
13
W–G
BR
B 3F
B 3F
B 3F
W–B
W–B
W–G
W–G
W–B
W–G
J 8(A), J 9(B)
Junction Connector
E B
A A
A A
7 IM1
BR
(*3)
BR
(*4)
W–G
W–B
W–G
A
J24
Junction
Connector
II
A
J37
Junction
Connector
IK
ED
EE

: Parts Location

Code	See Page	Code	See Page	Code	See Page
A22	36	F6	34 (1GR–FE)	J32 B	38
A38	36	F11	37	J37	38
A42	36	G3	37	J39	40
B1	36	H11	37	J40 A	40
B4 A	36	H12	37	J41 B	40
B6 C	36	H19	37	M2	39
B10	40	J5	38	R1 A	39
C7	37	J7	38	R2 B	39
C10	37	J8 A	38	R3 C	39
C12	37	J9 B	38	R5 D	39
C13	37	J10 A	38	R10 A	39
C15	37	J11 B	38	R12 B	39
D3	37	J14 A	38	R13	39
D4	37	J15 B	38	R14	41
D5	37	J16 A	38	R15	41
E7 D	37	J17 B	38	R25	39
F5	32 (2UZ–FE)	J20 A	38	S4	39
	34 (1GR–FE)	J24	38	S5	39
F6	32 (2UZ–FE)	J31 A	38		

: Relay Blocks

Code	See Page	Relay Blocks (Relay Block Location)
2	22	Engine Room R/B (Engine Compartment Left)

: Junction Block and Wire Harness Connector

Code	See Page	Junction Block and Wire Harness (Connector Location)
1B	24	Engine Room Main Wire and Driver Side J/B (Lower Finish Panel)
1C		
1F	24	Floor No.2 Wire and Driver Side J/B (Lower Finish Panel)
1G	25	Instrument Panel Wire and Driver Side J/B (Lower Finish Panel)
1J		
1L		
3D	28	Instrument Panel Wire and Center J/B (Instrument Panel Brace RH)
3E		
3F		

: Connector Joining Wire Harness and Wire Harness

Code	See Page	Joining Wire Harness and Wire Harness (Connector Location)
IC4	46	Instrument Panel Wire and Engine Room Main Wire (Left Kick Panel)
IH1	46	Instrument Panel Wire and Instrument Panel Wire (Behind the Combination Meter)
II1	46	Instrument Panel Wire and Instrument Panel Wire (Instrument Panel Brace LH)
IM1	47	Engine Wire and Instrument Panel Wire (Right Side of Blower Unit)
IR1	47	Instrument Panel Wire and Cigarette Lighter Wiring Assembly (Rear Console)
BD1	48	Back Door No.1 Wire and Floor No.2 Wire (Left Rear Side of Roof)
BH1	48	Back Door No.1 Wire and Back Door No.2 Wire (Left Side of Back Door)

▽ : **Ground Points**

Code	See Page	Ground Points Location
EA	44 (2UZ–FE)	Front Right Fender
	45 (1GR–FE)	
EB	44 (2UZ–FE)	Front Left Fender
	45 (1GR–FE)	
ED	44 (2UZ–FE)	Left Bank Cylinder Head
EE	44 (2UZ–FE)	Rear Side of Cylinder Block
	45 (1GR–FE)	Rear Side of Right Bank Cylinder Block
IG	46	Left Kick Panel
II	46	Instrument Panel Brace RH
IK	46	Right Kick Panel
BL	48	Floor Seat Crossmember LH
BO	48	Rear Pillar LH

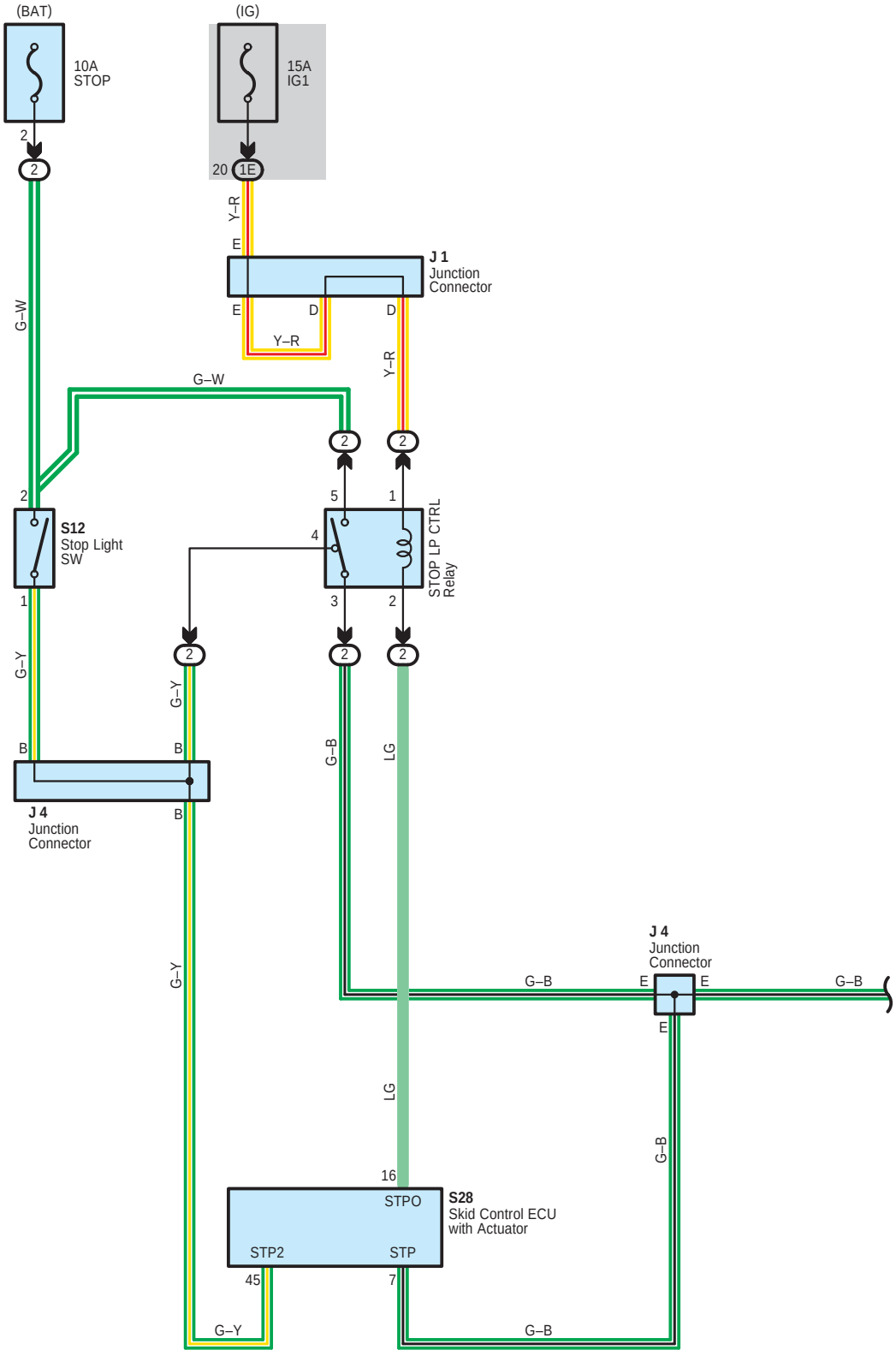
(BAT)
(IG)
10A
STOP
15A
IG1
2
20
1E
Y–R
E
J 1
Junction
Connector
E
D
D
Y–R
Y–R
G–W
G–W
2
2
2
5
1
4
S12
Stop Light
SW
STOP LP CTRL
Relay
1
3
2
2
2
2
G–Y
G–Y
B
B
B
J 4
Junction
Connector
G–B
LG
J 4
Junction
Connector
G–B
E
E
E
G–Y
LG
G–B
16
STPO
S28
Skid Control ECU
with Actuator
STP2
STP
45
7
G–Y
G–B

∗ 1 : w/ Rear Spoiler
∗ 2 : w/o Rear Spoiler

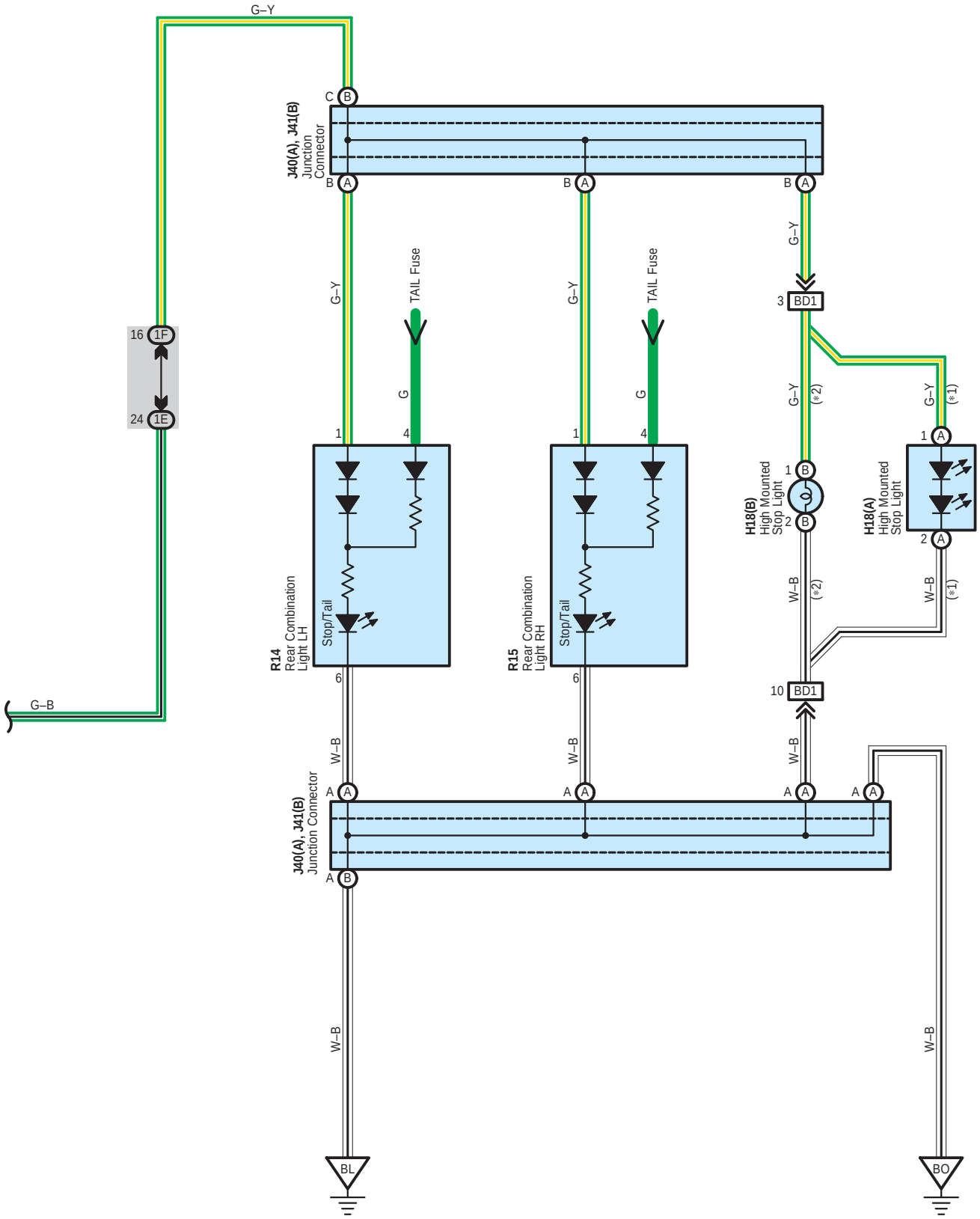

Stop Light

: Parts Location

Code		See Page	Code		See Page	Code	See Page
H18	A	40	J4		38	R15	41
	B	40	J40	A	40	S12	39
J1		33 (2UZ–FE)	J41	B	40	S28	33 (2UZ–FE)
		35 (1GR–FE)	R14		41		35 (1GR–FE)

: Relay Blocks

Code	See Page	Relay Blocks (Relay Block Location)
2	22	Engine Room R/B (Engine Compartment Left)

: Junction Block and Wire Harness Connector

Code	See Page	Junction Block and Wire Harness (Connector Location)
1E	24	Engine Room Main Wire and Driver Side J/B (Lower Finish Panel)
1F	24	Floor No.2 Wire and Driver Side J/B (Lower Finish Panel)
1J	25	Instrument Panel Wire and Driver Side J/B (Lower Finish Panel)

: Connector Joining Wire Harness and Wire Harness

Code	See Page	Joining Wire Harness and Wire Harness (Connector Location)
BD1	48	Back Door No.1 Wire and Floor No.2 Wire (Left Rear Side of Roof)

: Ground Points

Code	See Page	Ground Points Location
BL	48	Floor Seat Crossmember LH
BO	48	Rear Pillar LH

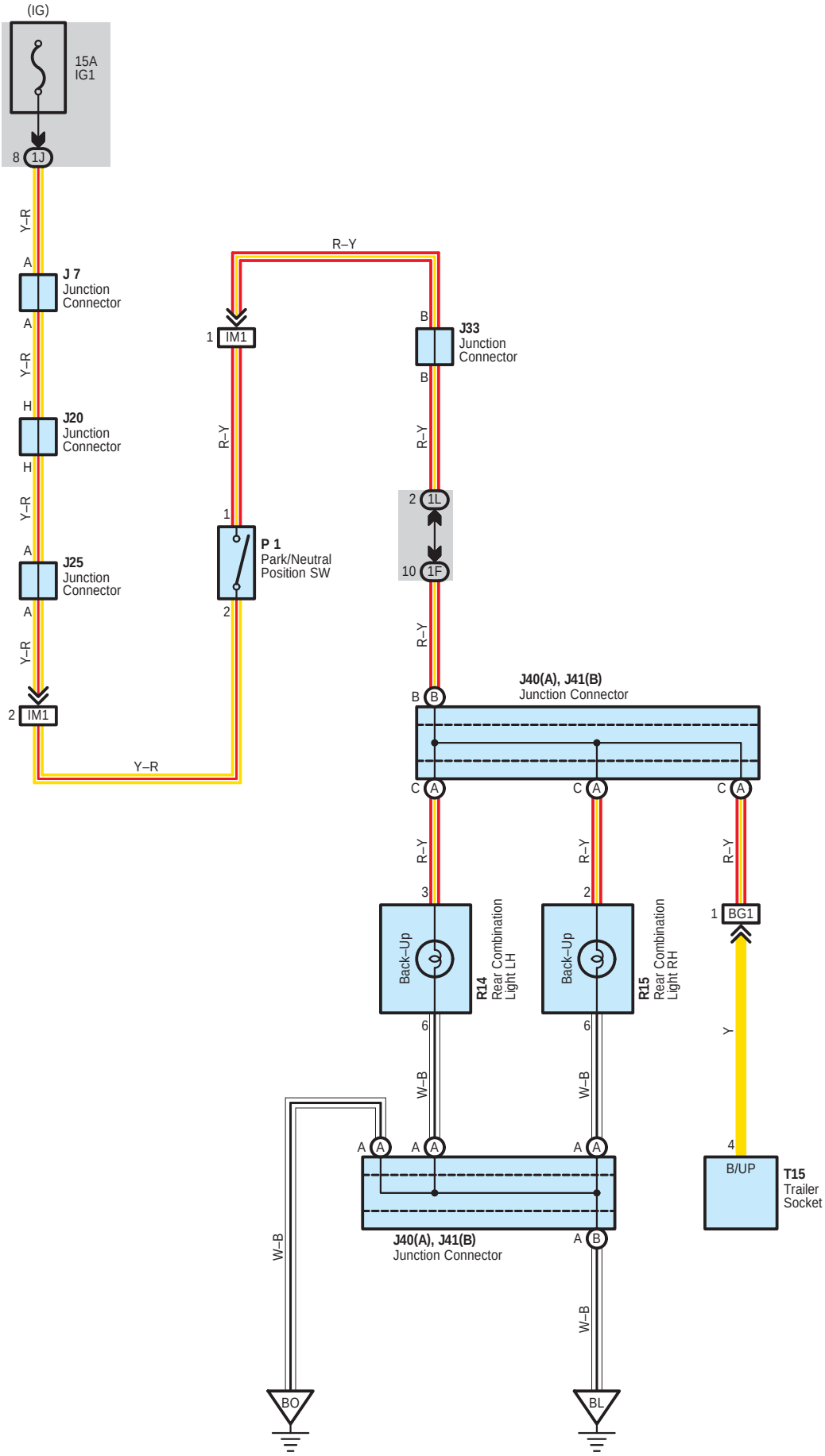
(IG)
15A
IG1
8 1J
Y–R
A
J 7
Junction
Connector
A
Y–R
H
J20
Junction
Connector
H
Y–R
A
J25
Junction
Connector
A
Y–R
2 IM1
Y–R
1 IM1
R–Y
1
P 1
Park/Neutral
Position SW
2
B
J33
Junction
Connector
B
R–Y
2 1L
10 1F
R–Y
B B
J40(A), J41(B)
Junction Connector
C A
C A
C A
R–Y
R–Y
R–Y
3
2
1 BG1
Back–Up
R14
Rear Combination
Light LH
Back–Up
R15
Rear Combination
Light RH
Y
6
6
W–B
W–B
A A
A A
A A
4
B/UP
T15
Trailer
Socket
J40(A), J41(B)
Junction Connector
A B
W–B
W–B
BO
BL

: Parts Location

Code	See Page	Code		See Page	Code	See Page
J7	38	J40	A	40	R14	41
J20	38	J41	B	40	R15	41
J25	38	P1		33 (2UZ–FE)	T15	41
J33	38			35 (1GR–FE)		

: Junction Block and Wire Harness Connector

Code	See Page	Junction Block and Wire Harness (Connector Location)
1F	24	Floor No.2 Wire and Driver Side J/B (Lower Finish Panel)
1J	25	Instrument Panel Wire and Driver Side J/B (Lower Finish Panel)
1L		

: Connector Joining Wire Harness and Wire Harness

Code	See Page	Joining Wire Harness and Wire Harness (Connector Location)
IM1	47	Engine Wire and Instrument Panel Wire (Right Side of Blower Unit)
BG1	48	Floor No.2 Wire and Frame No.3 Wire (Rear Side of Side Frame LH)

: Ground Points

Code	See Page	Ground Points Location
BL	48	Floor Seat Crossmember LH
BO	48	Rear Pillar LH

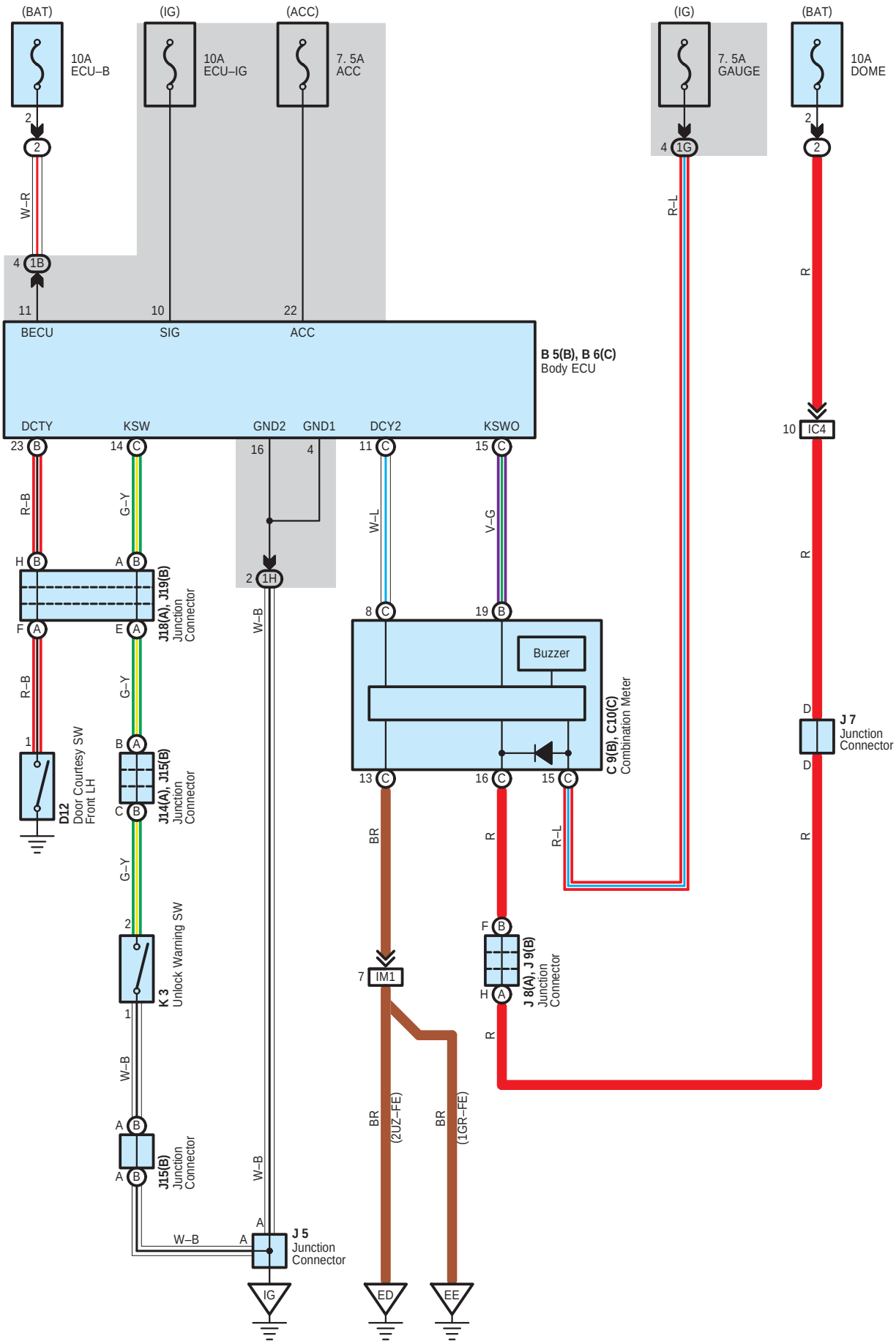
(BAT)
(IG)
(ACC)
10A ECU–B
10A ECU–IG
7. 5A ACC
(IG)
(BAT)
7. 5A GAUGE
10A DOME
W–R
R–L
R
BECU
SIG
ACC
B 5(B), B 6(C) Body ECU
DCTY
KSW
GND2
GND1
DCY2
KSWO
R–B
G–Y
W–L
V–G
W–B
BR
R
R–L
J18(A), J19(B) Junction Connector
J14(A), J15(B) Junction Connector
J15(B) Junction Connector
J 5 Junction Connector
J 7 Junction Connector
J 8(A), J 9(B) Junction Connector
D12 Door Courtesy SW Front LH
K 3 Unlock Warning SW
Buzzer
C 9(B), C10(C) Combination Meter
IC4
IM1
(2UZ–FE)
(1GR–FE)
IG
ED
EE

System Outline

Key Reminder System

With the ignition key inserted in the key cylinder (Unlock warning SW on), the ignition SW still off and driver's door open (Door courtesy SW on), when a signal is input to TERMINAL (B) 23 of the body ECU, the body ECU operates, current flows from TERMINAL (C) 15 of the ECU to TERMINAL (B) 19 of the combination meter to GROUND and key reminder buzzer sounds.

: Parts Location

Code		See Page	Code		See Page	Code		See Page
B5	B	36	J5		38	J15	B	38
B6	C	36	J7		38	J18	A	38
C9	B	37	J8	A	38	J19	B	38
C10	C	37	J9	B	38	K3		39
D12		40	J14	A	38			

: Relay Blocks

Code	See Page	Relay Blocks (Relay Block Location)
2	22	Engine Room R/B (Engine Compartment Left)

: Junction Block and Wire Harness Connector

Code	See Page	Junction Block and Wire Harness (Connector Location)
1B	24	Engine Room Main Wire and Driver Side J/B (Lower Finish Panel)
1G	25	Instrument Panel Wire and Driver Side J/B (Lower Finish Panel)
1H		

: Connector Joining Wire Harness and Wire Harness

Code	See Page	Joining Wire Harness and Wire Harness (Connector Location)
IC4	46	Instrument Panel Wire and Engine Room Main Wire (Left Kick Panel)
IM1	47	Engine Wire and Instrument Panel Wire (Right Side of Blower Unit)

: Ground Points

Code	See Page	Ground Points Location
ED	44 (2UZ–FE)	Left Bank Cylinder Head
EE	44 (2UZ–FE)	Rear Side of Cylinder Block
	45 (1GR–FE)	Rear Side of Right Bank Cylinder Block
IG	46	Left Kick Panel

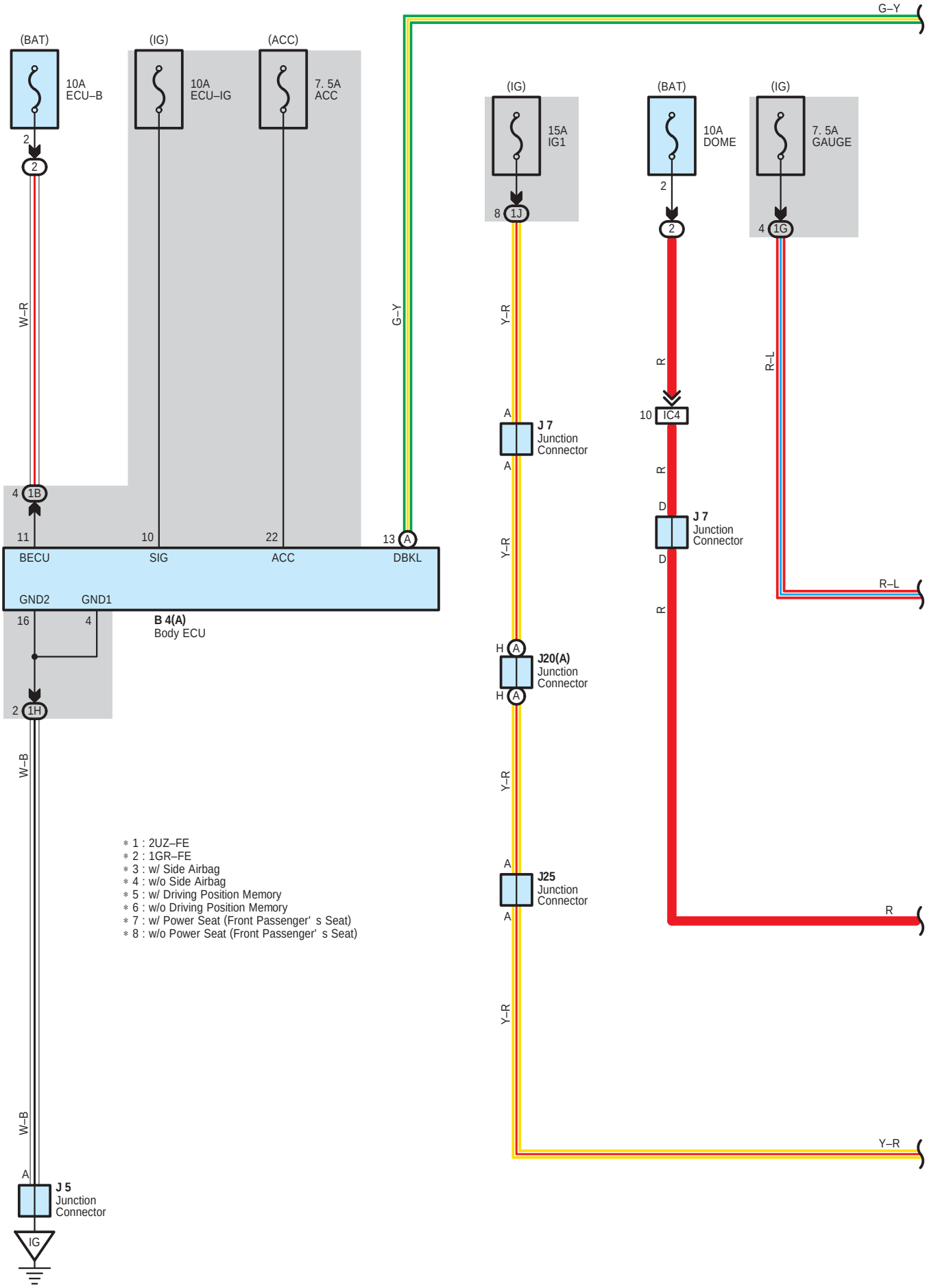
(BAT)
10A
ECU–B
(IG)
10A
ECU–IG
(ACC)
7. 5A
ACC
(IG)
15A
IG1
(BAT)
10A
DOME
(IG)
7. 5A
GAUGE
G–Y
W–R
G–Y
Y–R
R
R–L
R–L
R
Y–R
Y–R
Y–R
W–B
W–B
BECU
SIG
ACC
DBKL
GND2
GND1
B 4(A)
Body ECU
J 7
Junction
Connector
J 7
Junction
Connector
J20(A)
Junction
Connector
J25
Junction
Connector
J 5
Junction
Connector
IG
IC4
＊1 : 2UZ–FE
＊2 : 1GR–FE
＊3 : w/ Side Airbag
＊4 : w/o Side Airbag
＊5 : w/ Driving Position Memory
＊6 : w/o Driving Position Memory
＊7 : w/ Power Seat (Front Passenger' s Seat)
＊8 : w/o Power Seat (Front Passenger' s Seat)

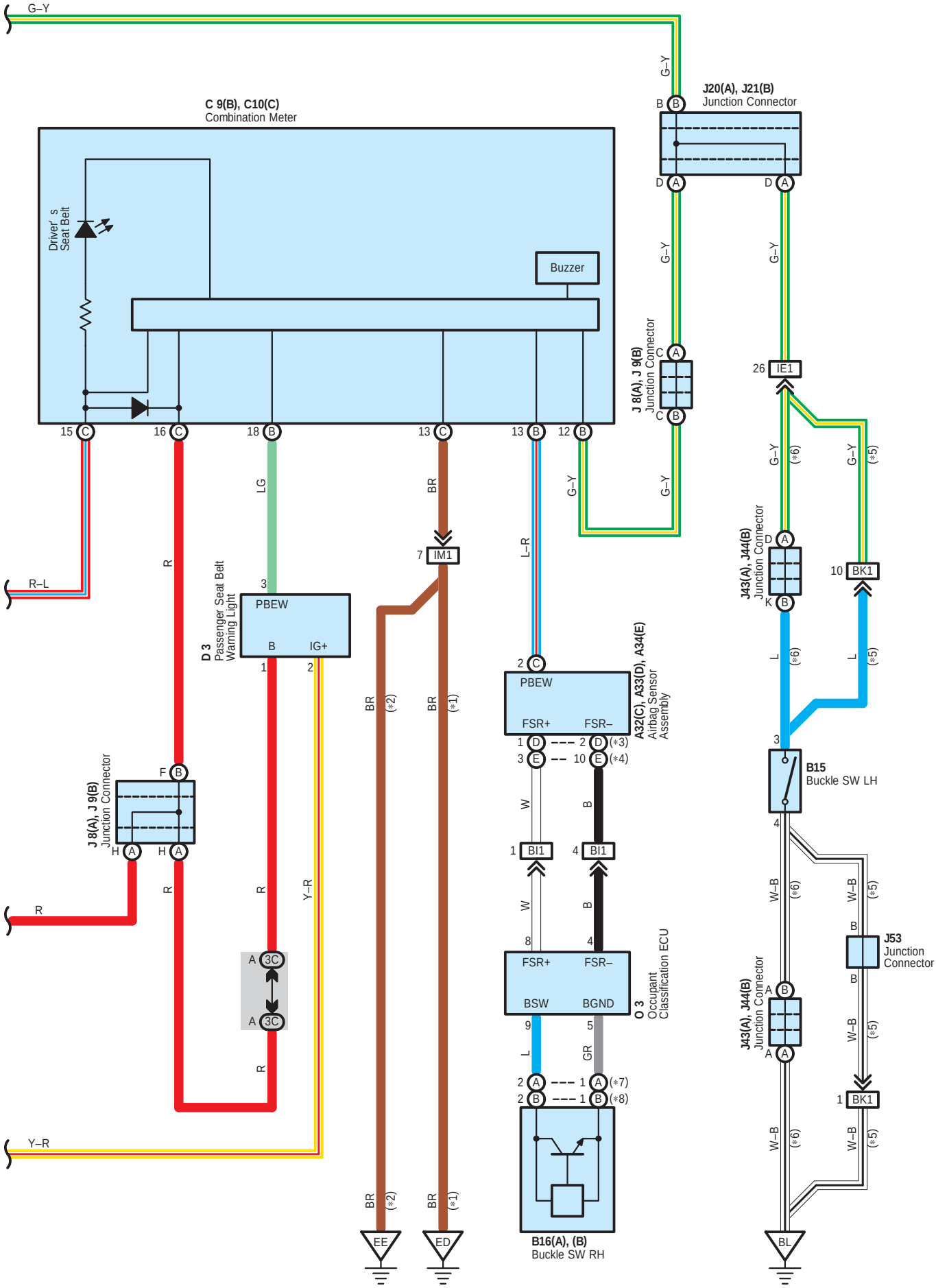
G–Y
C 9(B), C10(C)
Combination Meter
Driver' s Seat Belt
Buzzer
15 C
16 C
18 B
13 C
13 B
12 B
LG
BR
G–Y
L–R
R–L
R
Y–R
J20(A), J21(B)
Junction Connector
B B
D A
D A
J 8(A), J 9(B)
Junction Connector
C A
C B
26 IE1
(*6)
(*5)
J43(A), J44(B)
Junction Connector
D A
K B
10 BK1
L
D 3
Passenger Seat Belt Warning Light
PBEW
B IG+
3
1
2
7 IM1
J 8(A), J 9(B)
Junction Connector
F B
H A
H A
A32(C), A33(D), A34(E)
Airbag Sensor Assembly
PBEW
FSR+ FSR–
2 C
1 D
2 D
(*3)
3 E
10 E
(*4)
W
B
1 BI1
4 BI1
8
4
O 3
Occupant Classification ECU
FSR+ FSR–
BSW BGND
9
5
GR
2 A
1 A
(*7)
2 B
1 B
(*8)
B16(A), (B)
Buckle SW RH
A 3C
A 3C
B15
Buckle SW LH
4
W–B
J53
Junction Connector
1 BK1
EE
ED
BL

Seat Belt Warning

System Outline

When the driver has not fastened the seat belt while the ignition SW is ON, the driver seat belt warning light blinks, and a warning buzzer comes on.
Also, in the front passenger seat, a sensor recognizes passenger, and when the passenger has not fastened the seat belt, the front passenger seat belt warning light blinks.

: Parts Location

Code		See Page	Code		See Page	Code		See Page
A32	C	36	B16	B	43 (*2)	J21	B	38
A33	D	36	C9	B	37	J25		38
A34	E	36	C10	C	37	J43	A	42 (*1)
B4	A	36	D3		37			43 (*2)
B15		42 (*1)	J5		38	J44	B	42 (*1)
		43 (*2)	J7		38			43 (*2)
B16	A	42 (*1)	J8	A	38	J53		42 (*1)
		43 (*2)	J9	B	38	O3		42 (*1)
	B	42 (*1)	J20	A	38			43 (*2)

: Relay Blocks

Code	See Page	Relay Blocks (Relay Block Location)
2	22	Engine Room R/B (Engine Compartment Left)

: Junction Block and Wire Harness Connector

Code	See Page	Junction Block and Wire Harness (Connector Location)
1B	24	Engine Room Main Wire and Driver Side J/B (Lower Finish Panel)
1G	25	Instrument Panel Wire and Driver Side J/B (Lower Finish Panel)
1H		
1J		
3C	28	Instrument Panel Wire and Center J/B (Instrument Panel Brace RH)

: Connector Joining Wire Harness and Wire Harness

Code	See Page	Joining Wire Harness and Wire Harness (Connector Location)
IC4	46	Instrument Panel Wire and Engine Room Main Wire (Left Kick Panel)
IE1	46	Instrument Panel Wire and Floor No.2 Wire (Left Kick Panel)
IM1	47	Engine Wire and Instrument Panel Wire (Right Side of Blower Unit)
BI1	50 (*1)	Floor Wire and Seat No.1 Wire (Under the Front RH Seat)
	51 (*2)	
BK1	50 (*1)	Floor No.2 Wire and Seat No.2 Wire (Under the Front LH Seat)

: Ground Points

Code	See Page	Ground Points Location
ED	44 (2UZ–FE)	Left Bank Cylinder Head
EE	44 (2UZ–FE)	Rear Side of Cylinder Block
	45 (1GR–FE)	Rear Side of Right Bank Cylinder Block
IG	46	Left Kick Panel
BL	48	Floor Seat Crossmember LH

* 1 : Power Seat * 2 : Manual Seat

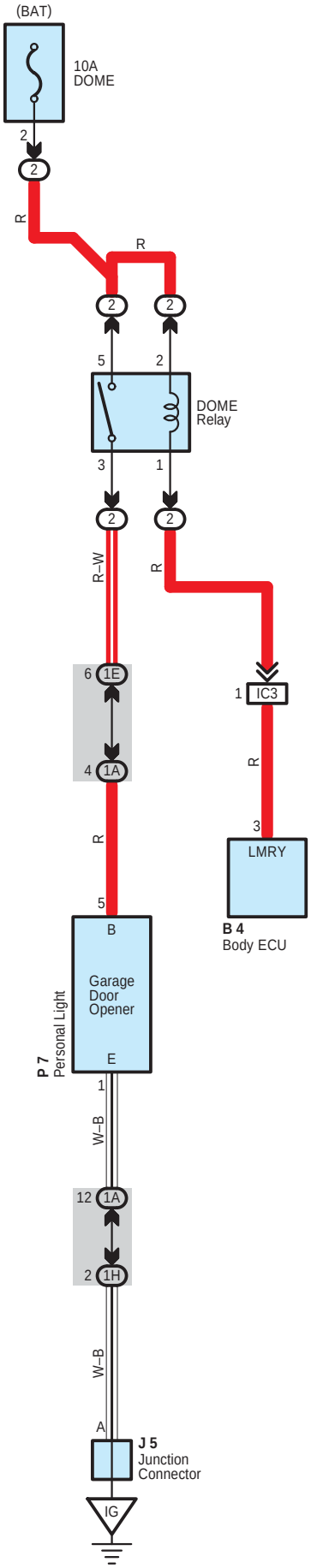
(BAT)
10A
DOME
2
2
R
R
2
2
5
2
DOME
Relay
3
1
2
2
R–W
R
6
1E
4
1A
1
IC3
R
3
LMRY
B 4
Body ECU
R
5
B
Garage
Door
Opener
E
P 7
Personal Light
1
W–B
12
1A
2
1H
W–B
A
J 5
Junction
Connector
IG

: Parts Location

Code	See Page	Code	See Page	Code	See Page
B4	36	J5	38	P7	41

: Relay Blocks

Code	See Page	Relay Blocks (Relay Block Location)
2	22	Engine Room R/B (Engine Compartment Left)

: Junction Block and Wire Harness Connector

Code	See Page	Junction Block and Wire Harness (Connector Location)
1A	24	Roof Wire and Driver Side J/B (Lower Finish Panel)
1E	24	Engine Room Main Wire and Driver Side J/B (Lower Finish Panel)
1H	25	Instrument Panel Wire and Driver Side J/B (Lower Finish Panel)

: Connector Joining Wire Harness and Wire Harness

Code	See Page	Joining Wire Harness and Wire Harness (Connector Location)
IC3	46	Instrument Panel Wire and Engine Room Main Wire (Left Kick Panel)

: Ground Points

Code	See Page	Ground Points Location
IG	46	Left Kick Panel

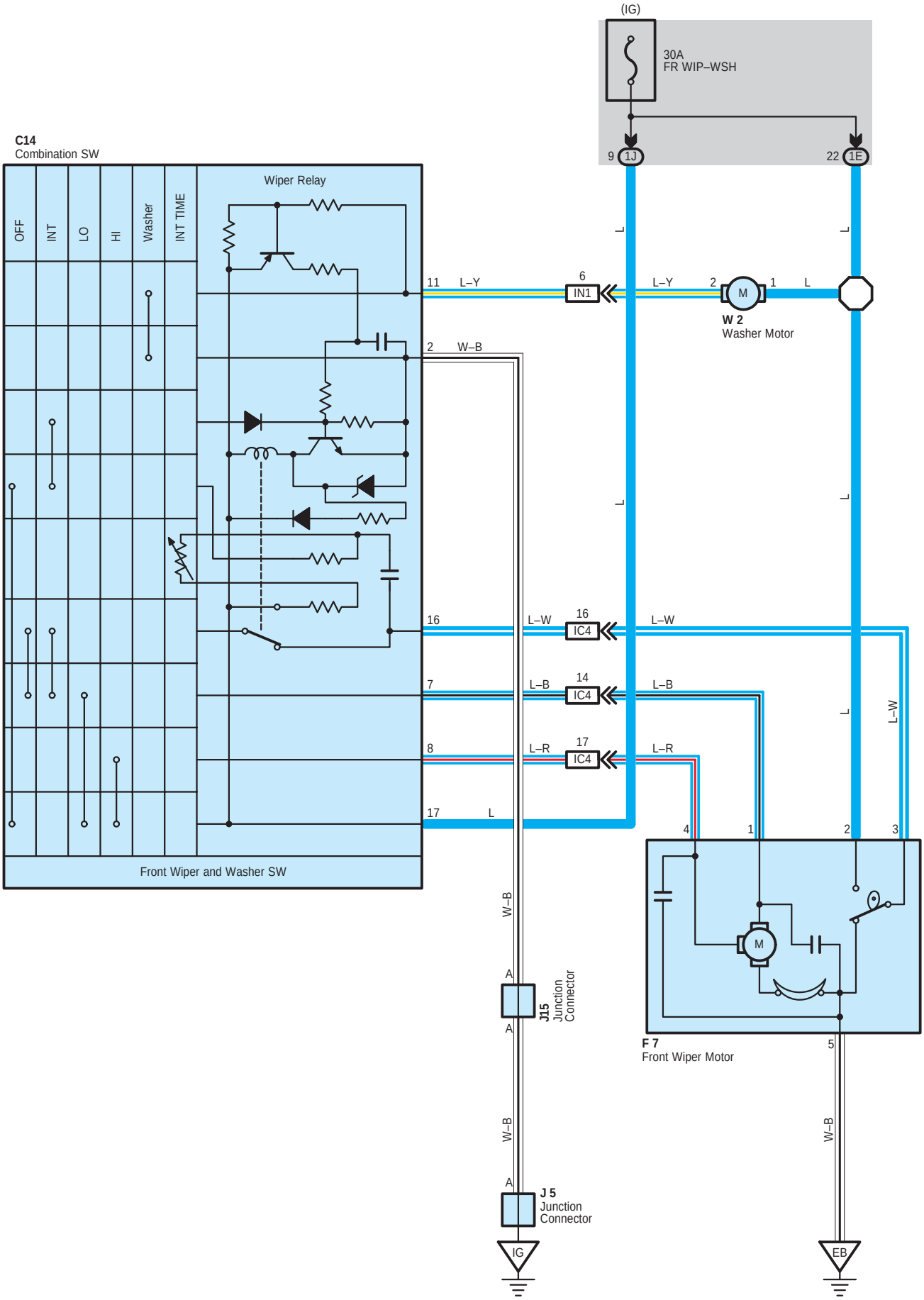
(IG)
30A
FR WIP–WSH
9 1J
22 1E
C14
Combination SW
OFF
INT
LO
HI
Washer
INT TIME
Wiper Relay
Front Wiper and Washer SW
11 L–Y
6 IN1
L–Y
2
M
1
L
W 2
Washer Motor
2 W–B
16 L–W
16 IC4
L–W
7 L–B
14 IC4
L–B
8 L–R
17 IC4
L–R
17 L
L
L–W
4
1
2
3
M
F 7
Front Wiper Motor
5
W–B
A
J15
Junction
Connector
A
W–B
A
J 5
Junction
Connector
IG
EB

System Outline

With the ignition SW turned on, the current flows to TERMINAL 17 of the wiper and washer SW, TERMINAL 1 of the washer motor and TERMINAL 2 of the front wiper motor through the FR WIP–WSH fuse.

1. Low Speed Position

With the wiper and washer SW turned to LO position, the current flows from TERMINAL 17 of the wiper and washer SW to TERMINAL 7 to TERMINAL 1 of the front wiper motor to TERMINAL 5 to GROUND and causes the front wiper motor to run at low speed.

2. High Speed Position

With the wiper and washer SW turned to HI position, the current flows from TERMINAL 17 of the wiper and washer SW to TERMINAL 8 to TERMINAL 4 of the front wiper motor to TERMINAL 5 to GROUND and causes the front wiper motor to run at high speed.

3. INT Position

With the wiper and washer SW turned to INT position, the wiper relay operates and current flows from TERMINAL 17 of the wiper and washer SW to TERMINAL 2 to GROUND. This activates the intermittent circuit and the current flows from TERMINAL 17 of the wiper and washer SW to TERMINAL 7 to TERMINAL 1 of the front wiper motor to TERMINAL 5 to GROUND and the wiper operates. Intermittent operation is controlled by a condenser charge and discharge function in the relay.

4. Washer Interlocking Operation

With the wiper and washer SW pulled to washer position (Washer SW ON position), the current flows from the FR WIP–WSH fuse to TERMINAL 1 of the washer motor to TERMINAL 2 to TERMINAL 11 of the wiper and washer SW to TERMINAL 2 to GROUND and causes the washer motor to run and the window washer to spray. Simultaneously, current flows from the FR WIP–WSH fuse to TERMINAL 17 of the wiper and washer SW to TERMINAL 7 to TERMINAL 1 of the front wiper motor to TERMINAL 5 to GROUND, causing the wiper to function.

○ : Parts Location

Code	See Page	Code	See Page	Code	See Page
C14	37	J5	38	W2	35 (1GR–FE)
F7	32 (2UZ–FE)	J15	38		
	34 (1GR–FE)	W2	33 (2UZ–FE)		

⬭ : Junction Block and Wire Harness Connector

Code	See Page	Junction Block and Wire Harness (Connector Location)
1E	24	Engine Room Main Wire and Driver Side J/B (Lower Finish Panel)
1J	25	Instrument Panel Wire and Driver Side J/B (Lower Finish Panel)

▭ : Connector Joining Wire Harness and Wire Harness

Code	See Page	Joining Wire Harness and Wire Harness (Connector Location)
IC4	46	Instrument Panel Wire and Engine Room Main Wire (Left Kick Panel)
IN1	47	Instrument Panel Wire and Engine Room Main Wire (Right Kick Panel)

▽ : Ground Points

Code	See Page	Ground Points Location
EB	44 (2UZ–FE)	Front Left Fender
	45 (1GR–FE)	
IG	46	Left Kick Panel

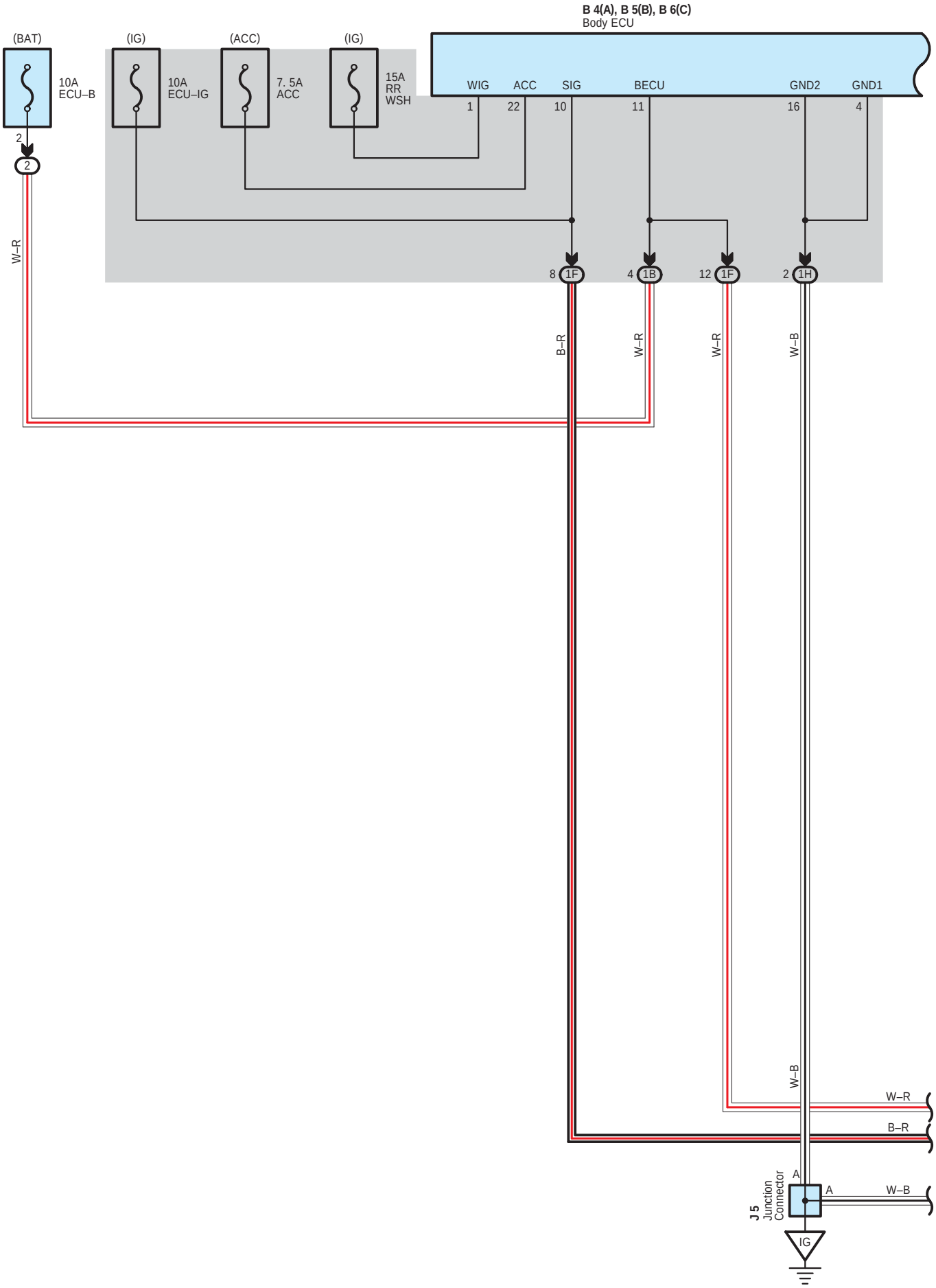
B 4(A), B 5(B), B 6(C)
Body ECU
(BAT)
(IG)
(ACC)
(IG)
10A
ECU–B
10A
ECU–IG
7. 5A
ACC
15A
RR
WSH
WIG
ACC
SIG
BECU
GND2
GND1
1
22
10
11
16
4
2
2
W–R
8 1F
4 1B
12 1F
2 1H
B–R
W–R
W–R
W–B
W–B
W–R
B–R
J5
Junction
Connector
A
A
W–B
IG

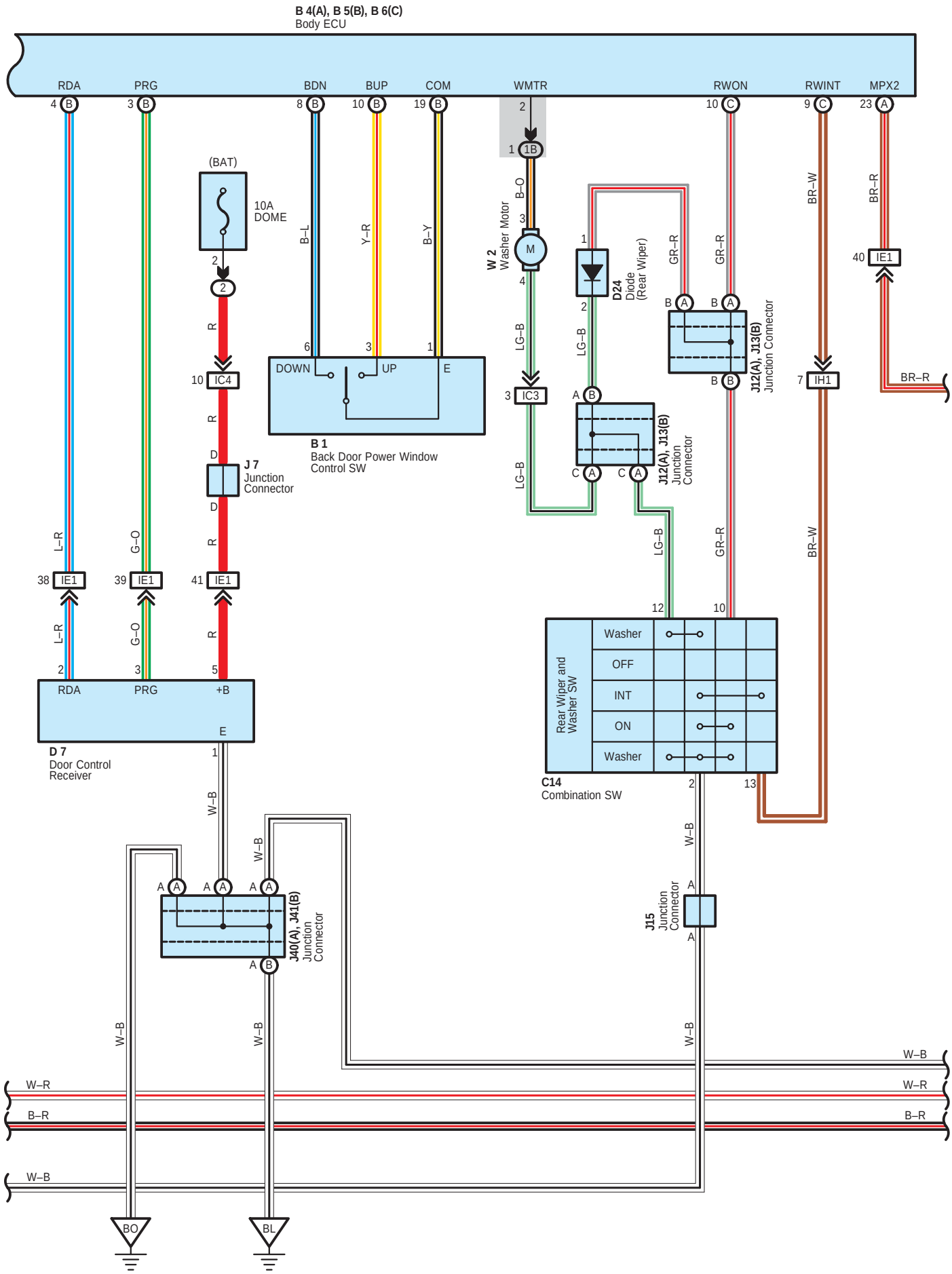
B 4(A), B 5(B), B 6(C)
Body ECU
RDA
PRG
BDN
BUP
COM
WMTR
RWON
RWINT
MPX2
(BAT)
10A
DOME
B–L
Y–R
B–Y
B–O
W 2
Washer Motor
D24
Diode
(Rear Wiper)
GR–R
BR–W
BR–R
DOWN
UP
E
B 1
Back Door Power Window
Control SW
IC4
IC3
IH1
IE1
J7
Junction
Connector
J12(A), J13(B)
Junction Connector
L–R
G–O
LG–B
R
RDA
PRG
+B
D 7
Door Control
Receiver
Rear Wiper and
Washer SW
Washer
OFF
INT
ON
C14
Combination SW
J15
Junction
Connector
J40(A), J41(B)
Junction
Connector
W–B
W–R
B–R
BO
BL

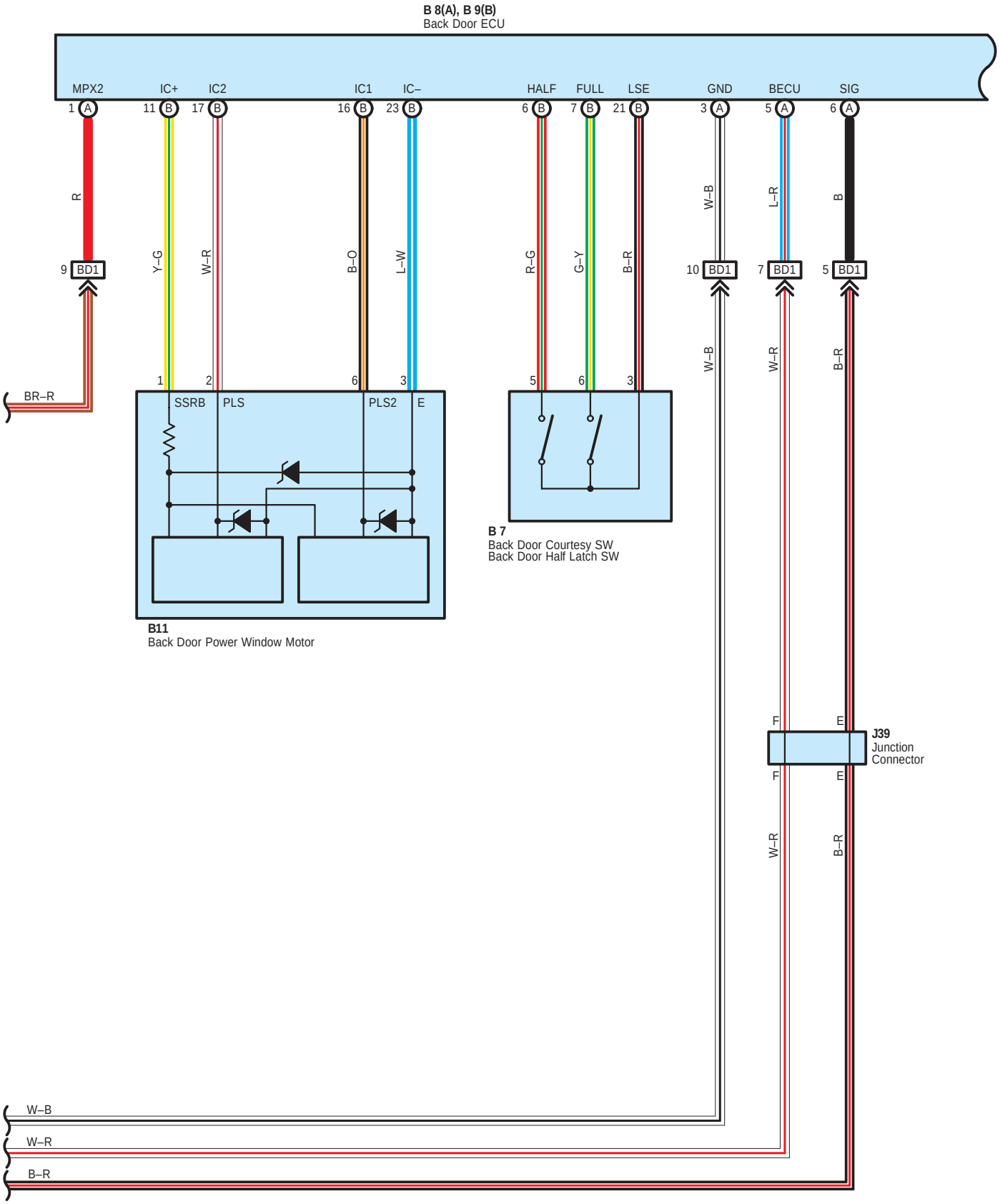
B 8(A), B 9(B)
Back Door ECU
MPX2
IC+
IC2
IC1
IC–
HALF
FULL
LSE
GND
BECU
SIG
1 A
11 B
17 B
16 B
23 B
6 B
7 B
21 B
3 A
5 A
6 A
R
Y–G
W–R
B–O
L–W
R–G
G–Y
B–R
W–B
L–R
B
9 BD1
10 BD1
7 BD1
5 BD1
BR–R
W–B
W–R
B–R
1
2
6
3
5
6
3
SSRB
PLS
PLS2
E
B11
Back Door Power Window Motor
B 7
Back Door Courtesy SW
Back Door Half Latch SW
F
E
J39
Junction Connector
F
E
W–R
B–R
W–B
W–R
B–R

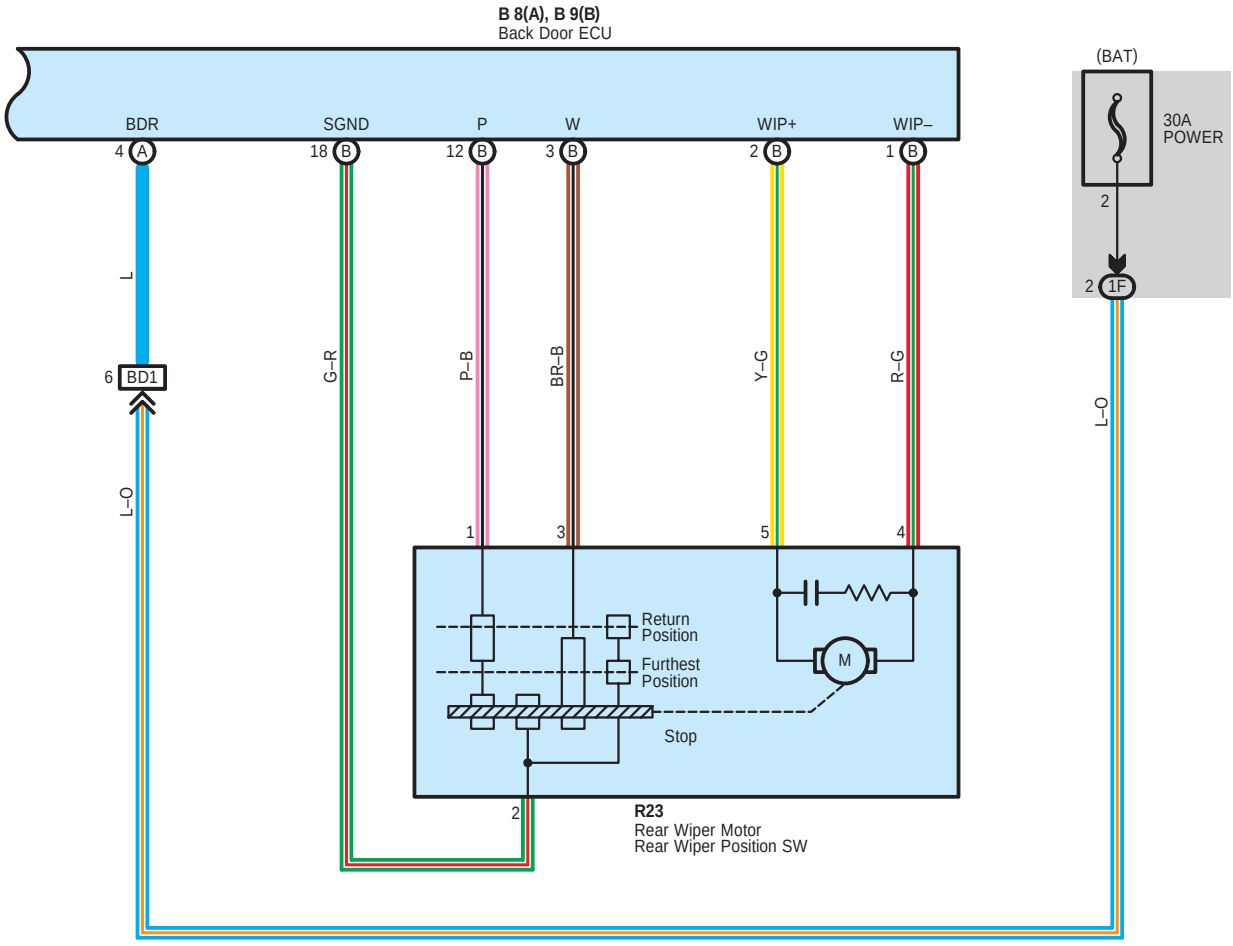
B 8(A), B 9(B)
Back Door ECU
BDR
SGND
P
W
WIP+
WIP–
4 A
18 B
12 B
3 B
2 B
1 B
(BAT)
30A
POWER
2
2 1F
L
6 BD1
G–R
P–B
BR–B
Y–G
R–G
L–O
L–O
1
3
5
4
Return
Position
Furthest
Position
M
Stop
2
R23
Rear Wiper Motor
Rear Wiper Position SW

Rear Wiper and Washer

System Outline

* Rear wiper operation
  The back door ECU initiates rear wiper intermittent or continuous operation according to rear wiper SW command from the body ECU. At this point, the position of the back door window is confirmed and, if it is not fully closed, the command will be neglected preventing the rear wiper from starting.
  If the ignition SW is turned OFF while the rear wiper is operating, it comes to a stop but only after the wiper arm has returned to its initial position.
* Rear washer operation
  Turning the rear washer SW ON, with the ignition SW ON and the back door window fully closed, initiates rear washer operation.

○ : Parts Location

Code	See Page	Code	See Page	Code	See Page
B1	36	C14	37	J39	40
B4 A	36	D7	40	J40 A	40
B5 B	36	D24	37	J41 B	40
B6 C	36	J5	38	R23	41
B7	40	J7	38	W2	33 (2UZ–FE)
B8 A	40	J12 A	38		35 (1GR–FE)
B9 B	40	J13 B	38		
B11	40	J15	38		

⬭ : Relay Blocks

Code	See Page	Relay Blocks (Relay Block Location)
2	22	Engine Room R/B (Engine Compartment Left)

⬭ : Junction Block and Wire Harness Connector

Code	See Page	Junction Block and Wire Harness (Connector Location)
1B	24	Engine Room Main Wire and Driver Side J/B (Lower Finish Panel)
1F	24	Floor No.2 Wire and Driver Side J/B (Lower Finish Panel)
1H	25	Instrument Panel Wire and Driver Side J/B (Lower Finish Panel)

▭ : Connector Joining Wire Harness and Wire Harness

Code	See Page	Joining Wire Harness and Wire Harness (Connector Location)
IC3	46	Instrument Panel Wire and Engine Room Main Wire (Left Kick Panel)
IC4		
IE1	46	Instrument Panel Wire and Floor No.2 Wire (Left Kick Panel)
IH1	46	Instrument Panel Wire and Instrument Panel Wire (Behind the Combination Meter)
BD1	48	Back Door No.1 Wire and Floor No.2 Wire (Left Rear Side of Roof)

▽ : Ground Points

Code	See Page	Ground Points Location
IG	46	Left Kick Panel
BL	48	Floor Seat Crossmember LH
BO	48	Rear Pillar LH

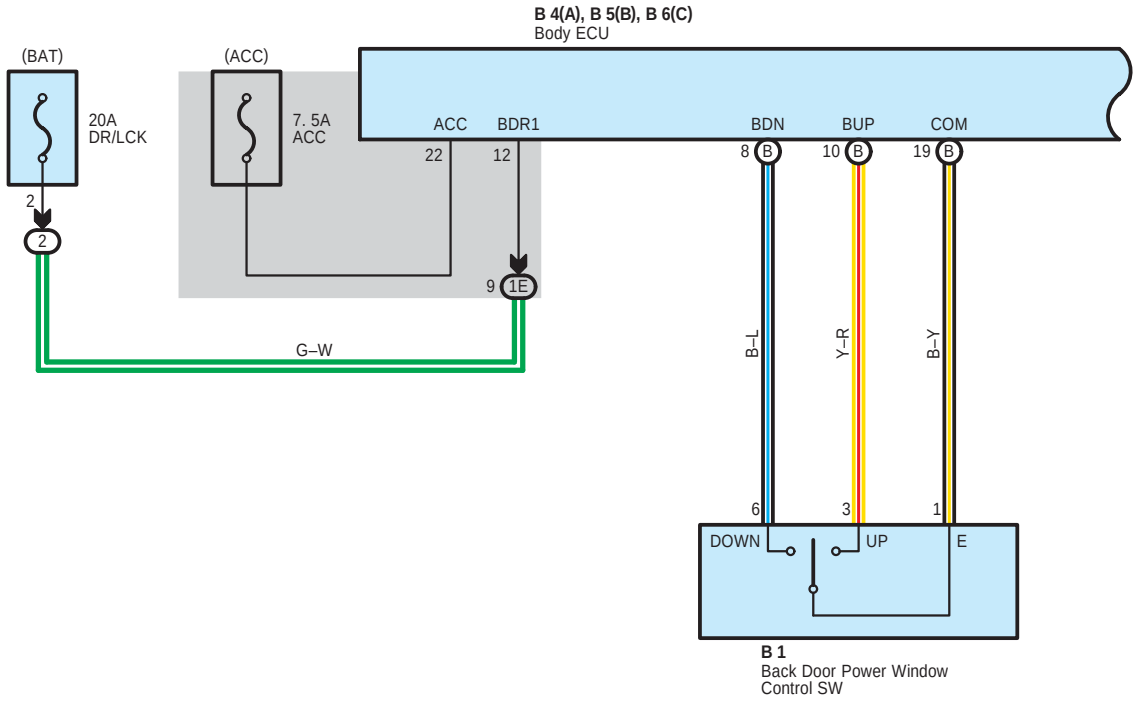
B 4(A), B 5(B), B 6(C)
Body ECU
(BAT)
(ACC)
20A
DR/LCK
7. 5A
ACC
ACC
BDR1
BDN
BUP
COM
22
12
8
10
19
2
2
9
1E
G–W
B–L
Y–R
B–Y
6
3
1
DOWN
UP
E
B 1
Back Door Power Window
Control SW

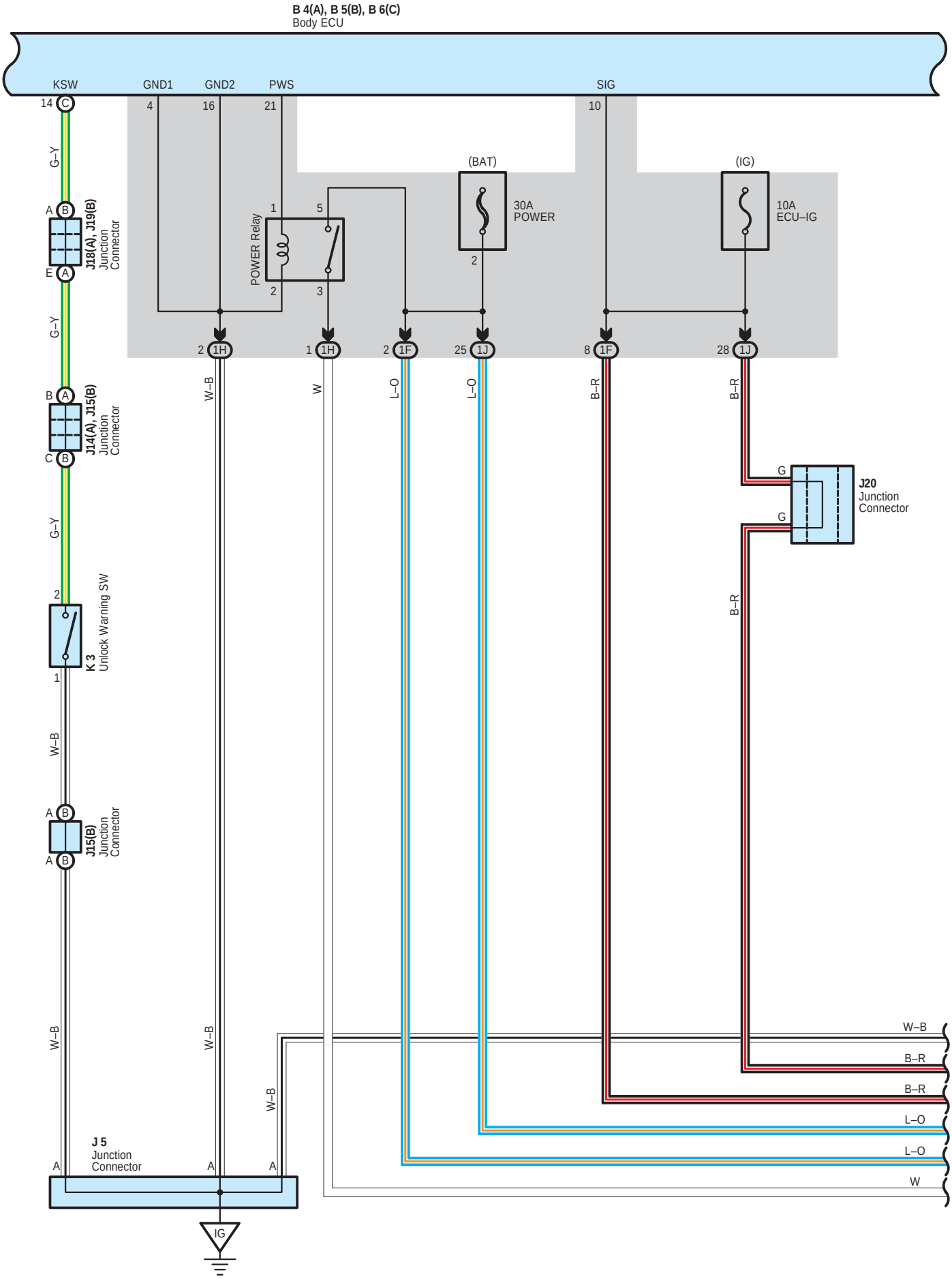
B 4(A), B 5(B), B 6(C)
Body ECU
KSW
GND1
GND2
PWS
SIG
14 C
4
16
21
10
G–Y
A B
E A
J18(A), J19(B)
Junction Connector
POWER Relay
1
5
2
3
(BAT)
30A
POWER
2
(IG)
10A
ECU–IG
G–Y
2 1H
1 1H
2 1F
25 1J
8 1F
28 1J
W–B
W
L–O
L–O
B–R
B–R
B A
C B
J14(A), J15(B)
Junction Connector
G
G
J20
Junction Connector
G–Y
2
1
K 3
Unlock Warning SW
B–R
W–B
A B
A B
J15(B)
Junction Connector
W–B
W–B
W–B
W–B
B–R
B–R
L–O
L–O
W
J 5
Junction Connector
A
A
A
IG

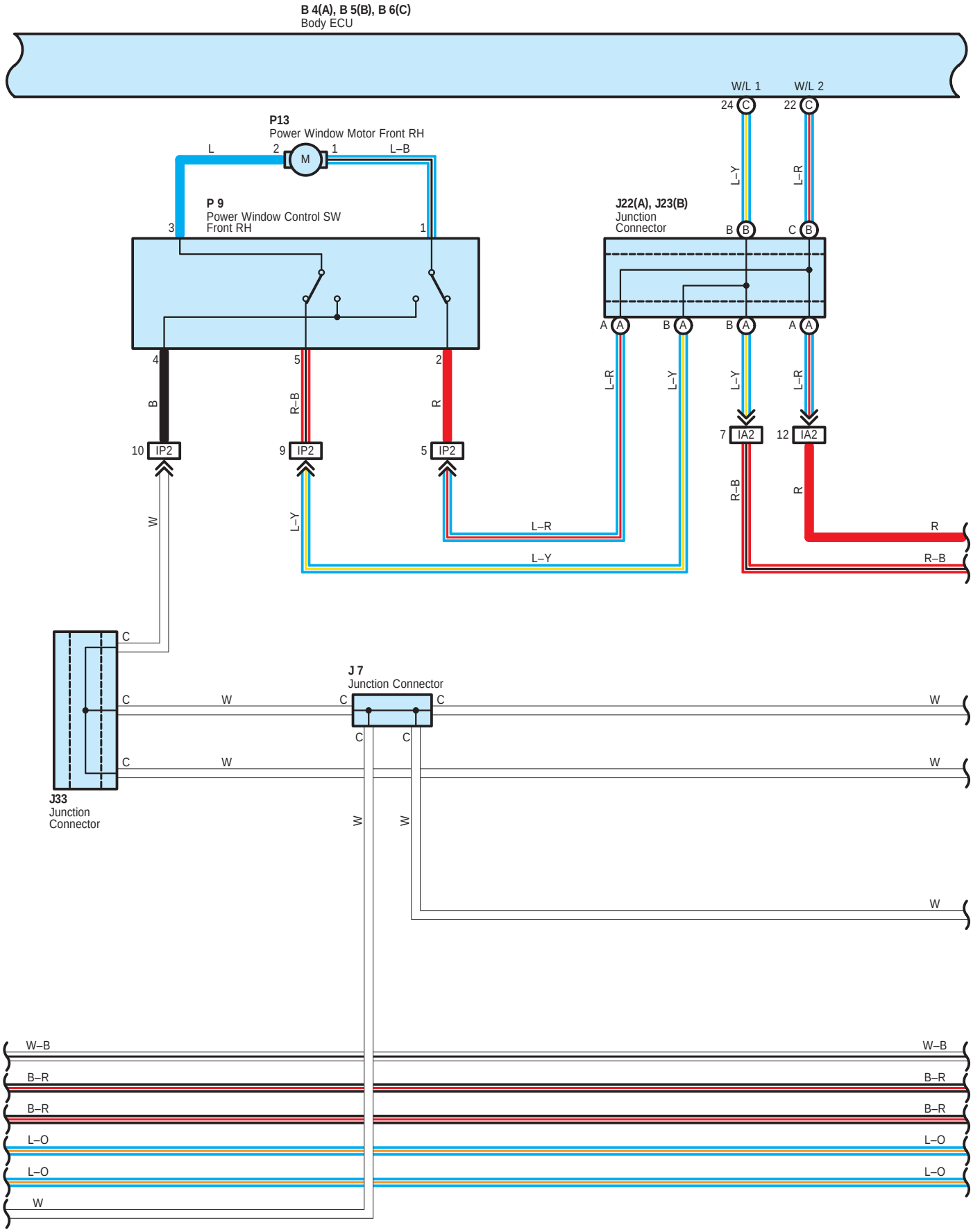
B 4(A), B 5(B), B 6(C)
Body ECU
W/L 1
W/L 2
24 C
22 C
L–Y
L–R
P13
Power Window Motor Front RH
L
2
M
1
L–B
P 9
Power Window Control SW
Front RH
3
1
J22(A), J23(B)
Junction
Connector
B B
C B
A A
B A
B A
A A
4
5
2
B
R–B
R
L–R
L–Y
10 IP2
9 IP2
5 IP2
7 IA2
12 IA2
W
L–Y
L–R
L–Y
R–B
R
R
R–B
C
J33
Junction
Connector
J 7
Junction Connector
C W C C W
C W W
C C
W
W
W
W–B
B–R
B–R
L–O
L–O
W
W–B
B–R
B–R
L–O
L–O

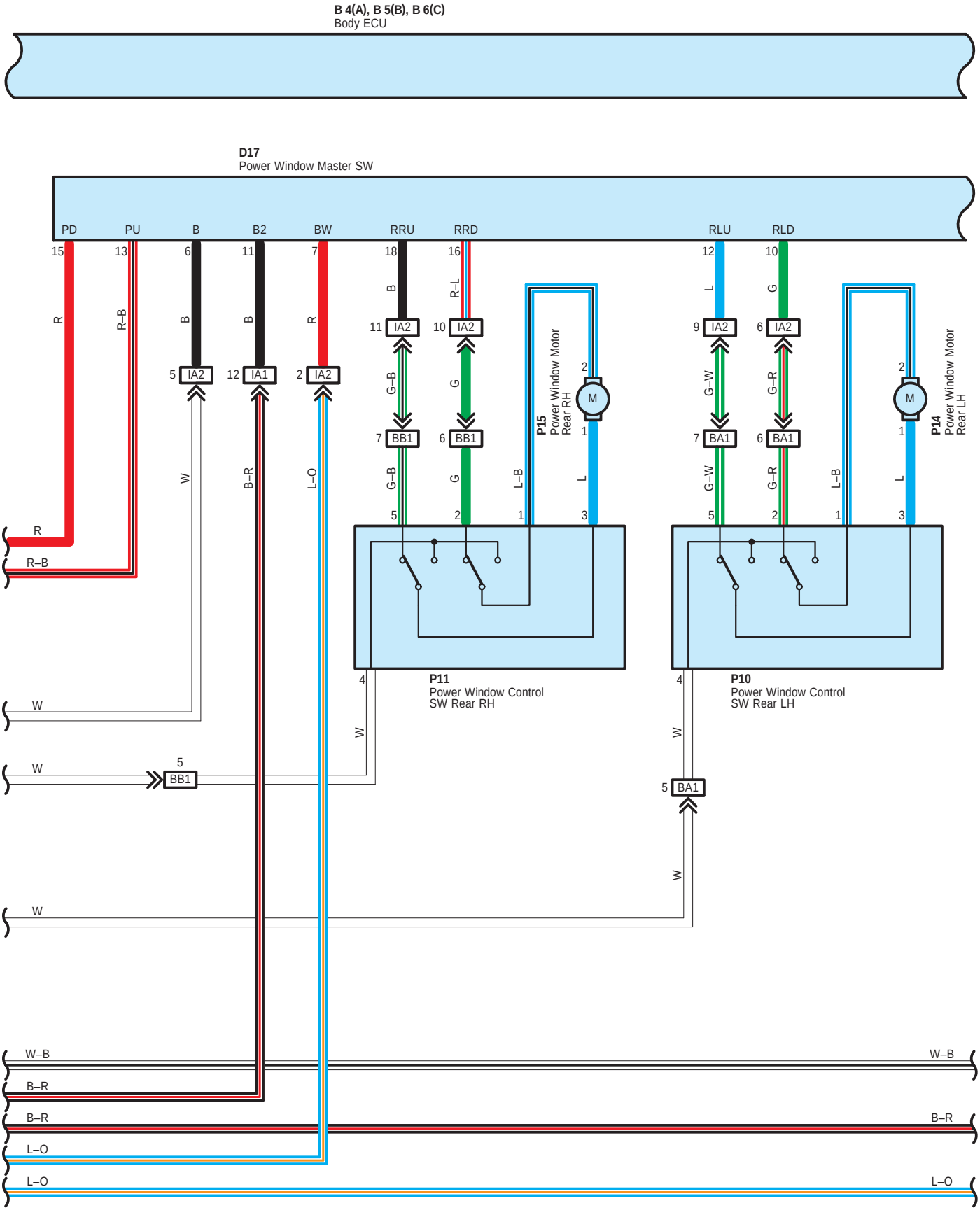
B 4(A), B 5(B), B 6(C)
Body ECU
D17
Power Window Master SW
PD
PU
B
B2
BW
RRU
RRD
RLU
RLD
15
13
6
11
7
18
16
12
10
R
R–B
B
B
R
B
R–L
L
G
IA2
IA1
BB1
BA1
G–B
G
G–W
G–R
L–B
L
W
B–R
L–O
P15
Power Window Motor
Rear RH
P14
Power Window Motor
Rear LH
M
P11
Power Window Control
SW Rear RH
P10
Power Window Control
SW Rear LH
W–B
B–R
L–O

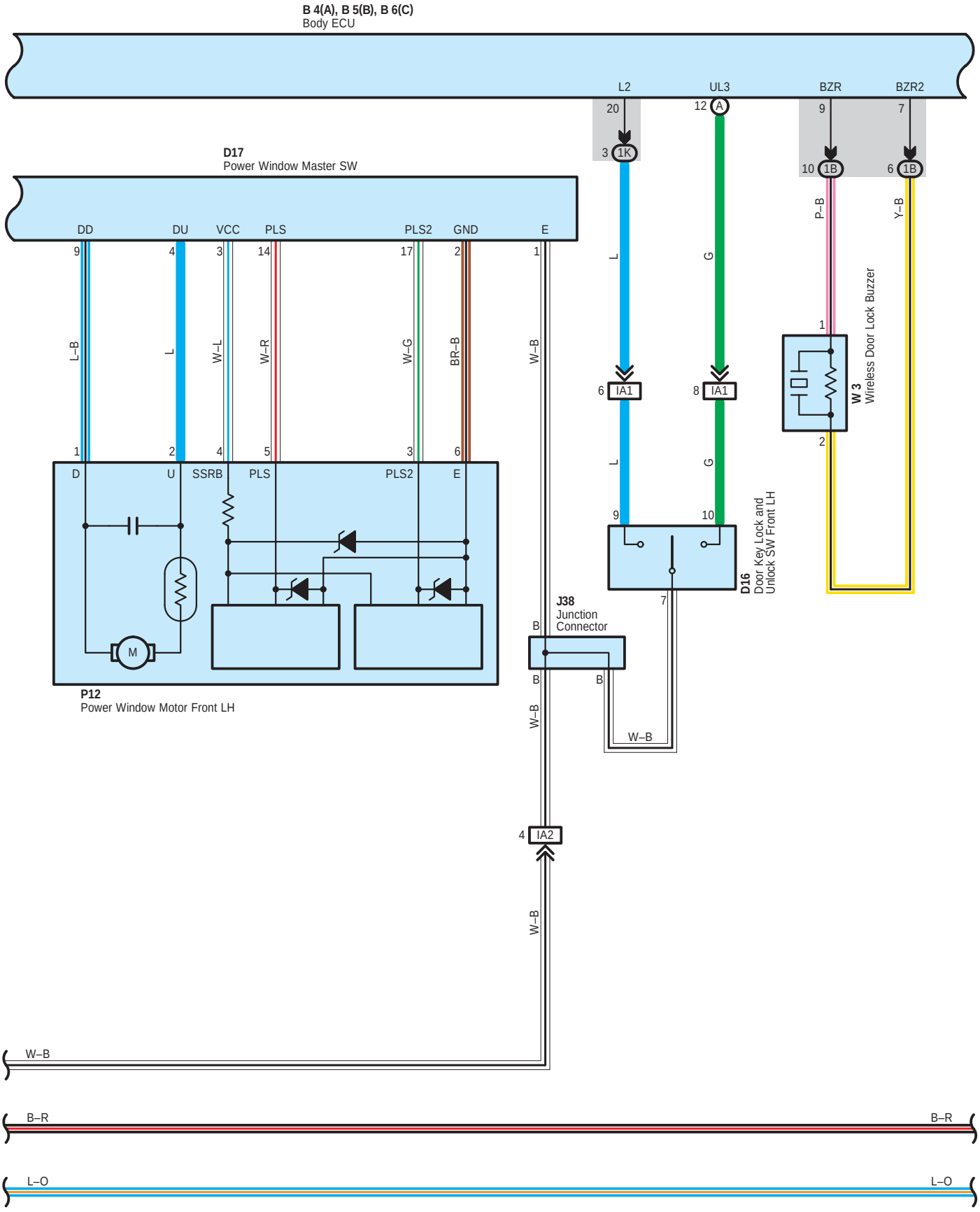
B 4(A), B 5(B), B 6(C)
Body ECU
L2
UL3
BZR
BZR2
20
12
A
9
7
3
1K
10
1B
6
1B
D17
Power Window Master SW
P–B
Y–B
DD
DU
VCC
PLS
PLS2
GND
E
9
4
3
14
17
2
1
L–B
L
W–L
W–R
W–G
BR–B
W–B
L
G
1
6
IA1
8
IA1
W 3
Wireless Door Lock Buzzer
2
1
2
4
5
3
6
D
U
SSRB
PLS
PLS2
E
L
G
9
10
D16
Door Key Lock and
Unlock SW Front LH
7
J38
Junction
Connector
B
B
B
W–B
W–B
M
P12
Power Window Motor Front LH
4
IA2
W–B
W–B
B–R
B–R
L–O
L–O

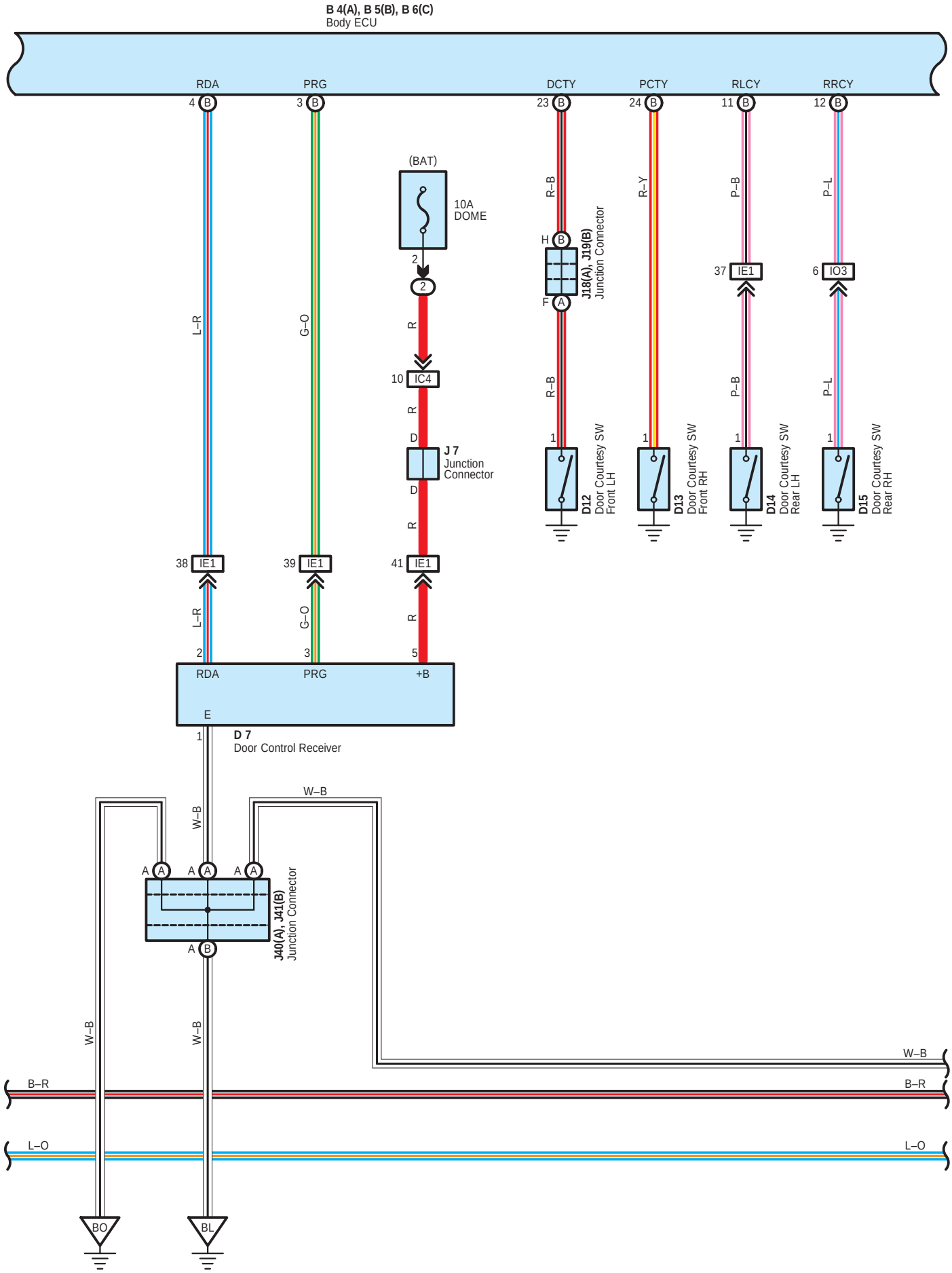
B 4(A), B 5(B), B 6(C)
Body ECU
RDA
PRG
DCTY
PCTY
RLCY
RRCY
4 B
3 B
23 B
24 B
11 B
12 B
(BAT)
10A
DOME
2
2
R
10 IC4
R
D
J 7
Junction
Connector
D
R
5
L–R
G–O
R–B
R–Y
P–B
P–L
H B
F A
J18(A), J19(B)
Junction Connector
37 IE1
6 IO3
1
D12
Door Courtesy SW
Front LH
D13
Door Courtesy SW
Front RH
D14
Door Courtesy SW
Rear LH
D15
Door Courtesy SW
Rear RH
38 IE1
39 IE1
41 IE1
2
3
RDA
PRG
+B
E
1
D 7
Door Control Receiver
W–B
A A A A
A B
J40(A), J41(B)
Junction Connector
B–R
L–O
BO
BL

Power Window

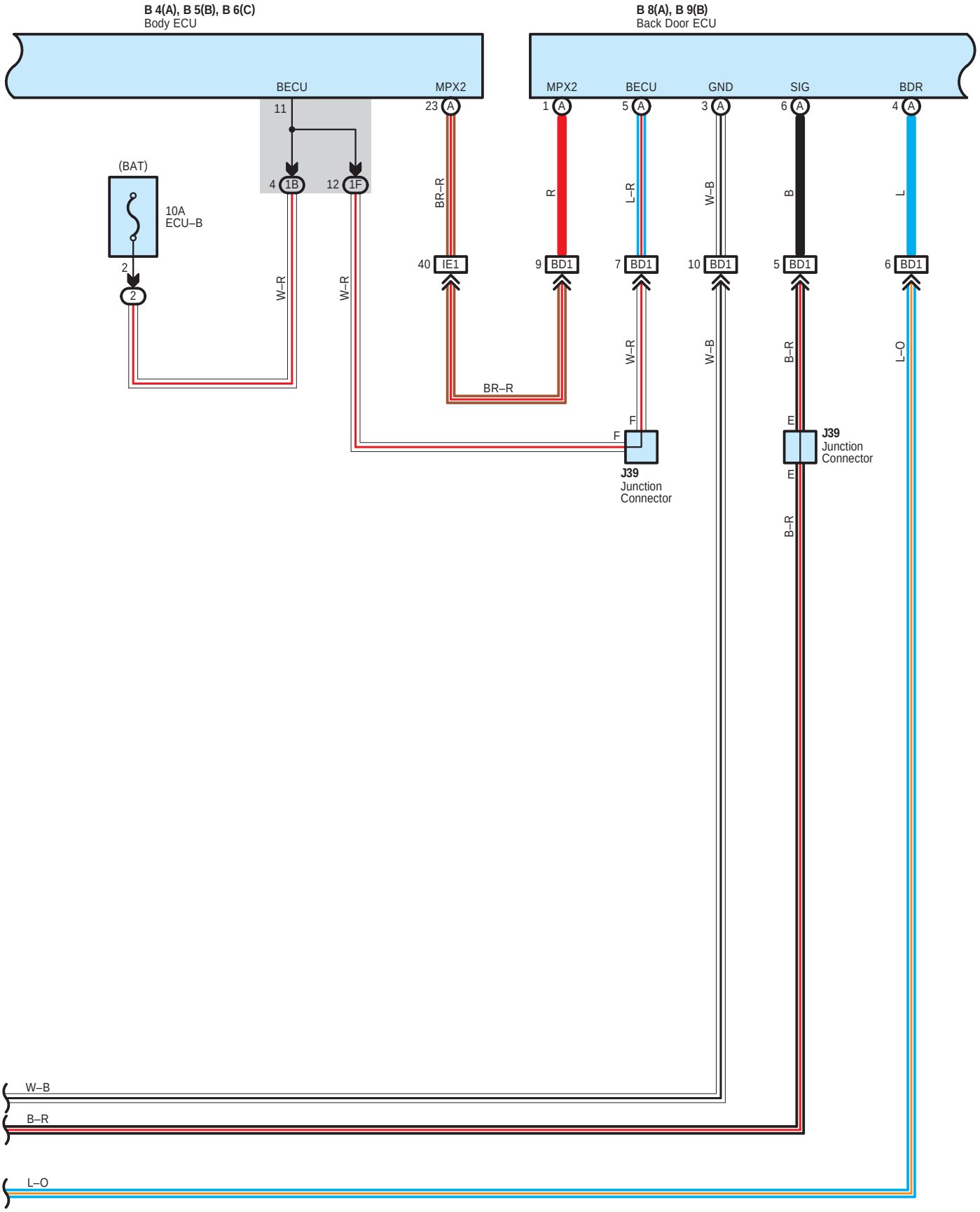

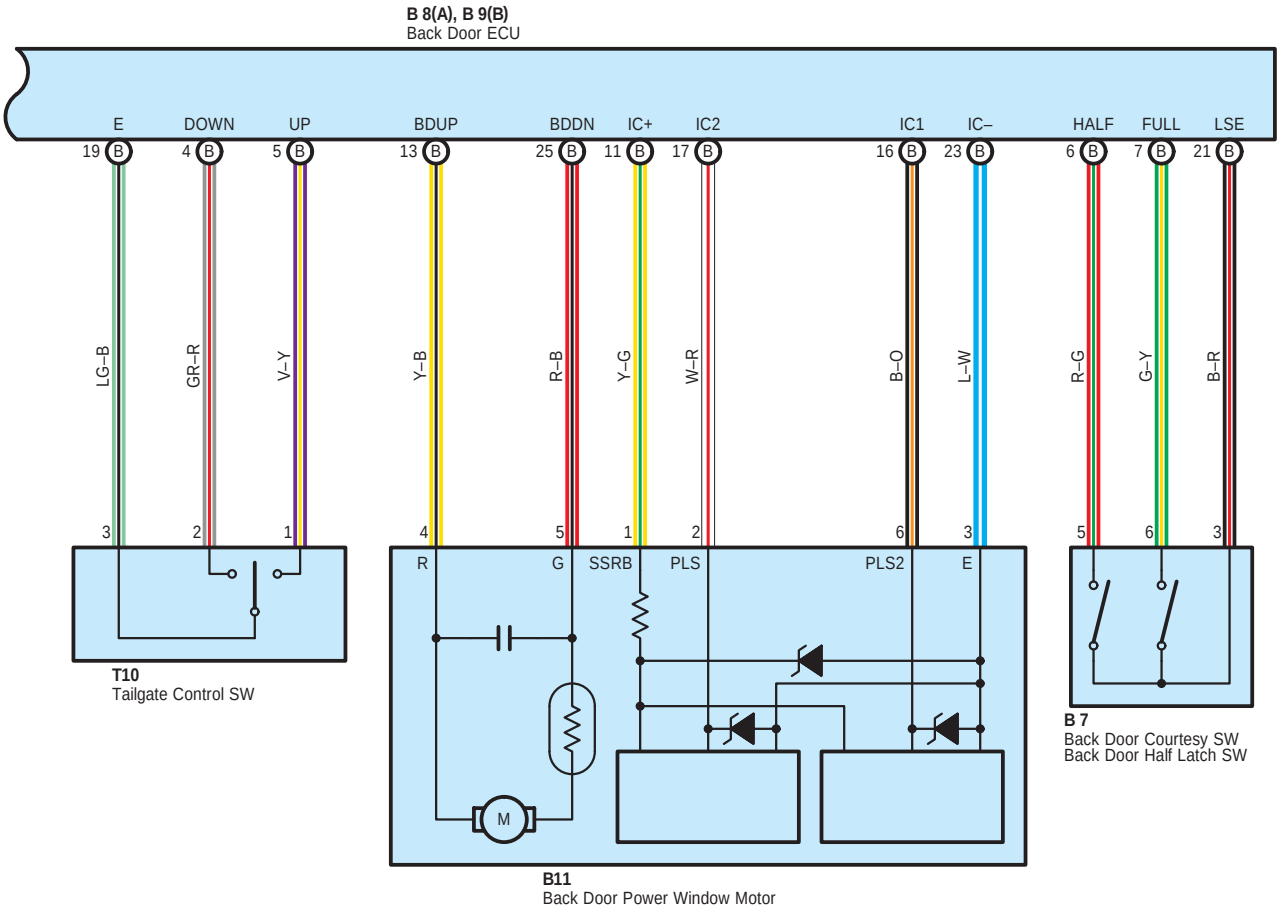
B 8(A), B 9(B)
Back Door ECU
E
DOWN
UP
BDUP
BDDN
IC+
IC2
IC1
IC–
HALF
FULL
LSE
19
4
5
13
25
11
17
16
23
6
7
21
LG–B
GR–R
V–Y
Y–B
R–B
Y–G
W–R
B–O
L–W
R–G
G–Y
B–R
3
2
1
4
5
1
2
6
3
5
6
3
R
G
SSRB
PLS
PLS2
E
M
T10
Tailgate Control SW
B11
Back Door Power Window Motor
B 7
Back Door Courtesy SW
Back Door Half Latch SW

Power Window

System Outline

* The power window system is controlled by the body ECU. This system has following features.

1. Manual Up and Down Function

This function causes the window to open or close while the power window switch is being pulled halfway up or pushed halfway down. The window stops as soon as the switch is released.

2. Front Doors One–Touch Auto Up and Down Function

The front doors one–touch auto up and down function enables the window of front doors to be fully opened or closed at a touch of the power window switch.

3. Jam Protection Function

A jam protection function automatically stops the power window and moves it downward if a foreign object gets jammed in the window during one–touch auto–up operation.

4. Remote Control Function

The up and down operations of the front passenger door window and the rear door windows can be controlled by operating the power window master switch.

5. Ker–Off Operation Function

Within about 45 seconds when turn OFF the ignition SW or open and shut the driver's seat door, this function enables the door window operation with the power window master switch and/or the manual operation at each passenger's seat door. (The driver's seat door includes the one–touch auto up and down operation as well)

6. Key–Linked Up and Down Function

A key–linked up and down function, which is linked to the driver door key cylinder operation, open or close the window of the all doors.

* When the battery terminal or fuse is disconnected, the glass position of all doors have to be reset to the initial positions, door by door, by the power window control switch in accordance with the following procedure:

A) Reconnect the battery terminal or fuse.

B) Turn ON the ignition switch.

C) Lower the window of each door by the power window switch to open it halfway or more.

D) Then move the window up by the power window switch to close it fully.
Do not release the switch for at least one second after the window is fully closed.

○ : Parts Location

Code	See Page	Code	See Page	Code	See Page
B1	36	D17	40	J41 B	40
B4 A	36	J5	38	K3	39
B5 B	36	J7	38	P9	41
B6 C	36	J14 A	38	P10	41
B7	40	J15 B	38	P11	41
B8 A	40	J18 A	38	P12	41
B9 B	40	J19 B	38	P13	41
B11	40	J20	38	P14	41
D7	40	J22 A	38	P15	41
D12	40	J23 B	38	T10	41
D13	40	J33	38	W3	33 (2UZ–FE)
D14	40	J38	40		35 (1GR–FE)
D15	40	J39	40		
D16	40	J40 A	40		

▭ : Relay Blocks

Code	See Page	Relay Blocks (Relay Block Location)
2	22	Engine Room R/B (Engine Compartment Left)

: **Junction Block and Wire Harness Connector**

Code	See Page	Junction Block and Wire Harness (Connector Location)
1B	24	Engine Room Main Wire and Driver Side J/B (Lower Finish Panel)
1E		
1F	24	Floor No.2 Wire and Driver Side J/B (Lower Finish Panel)
1H	25	Instrument Panel Wire and Driver Side J/B (Lower Finish Panel)
1J		
1K		

: **Connector Joining Wire Harness and Wire Harness**

Code	See Page	Joining Wire Harness and Wire Harness (Connector Location)
IA1	46	Front Door LH Wire and Instrument Panel Wire (Left Kick Panel)
IA2		
IC4	46	Instrument Panel Wire and Engine Room Main Wire (Left Kick Panel)
IE1	46	Instrument Panel Wire and Floor No.2 Wire (Left Kick Panel)
IO3	47	Instrument Panel Wire and Floor Wire (Right Kick Panel)
IP2	47	Front Door RH Wire and Instrument Panel Wire (Right Kick Panel)
BA1	48	Rear Door No.2 Wire and Instrument Panel Wire (Left Center Pillar)
BB1	48	Rear Door No.1 Wire and Instrument Panel Wire (Right Center Pillar)
BD1	48	Back Door No.1 Wire and Floor No.2 Wire (Left Rear Side of Roof)

: **Ground Points**

Code	See Page	Ground Points Location
IG	46	Left Kick Panel
BL	48	Floor Seat Crossmember LH
BO	48	Rear Pillar LH

Door Lock Control

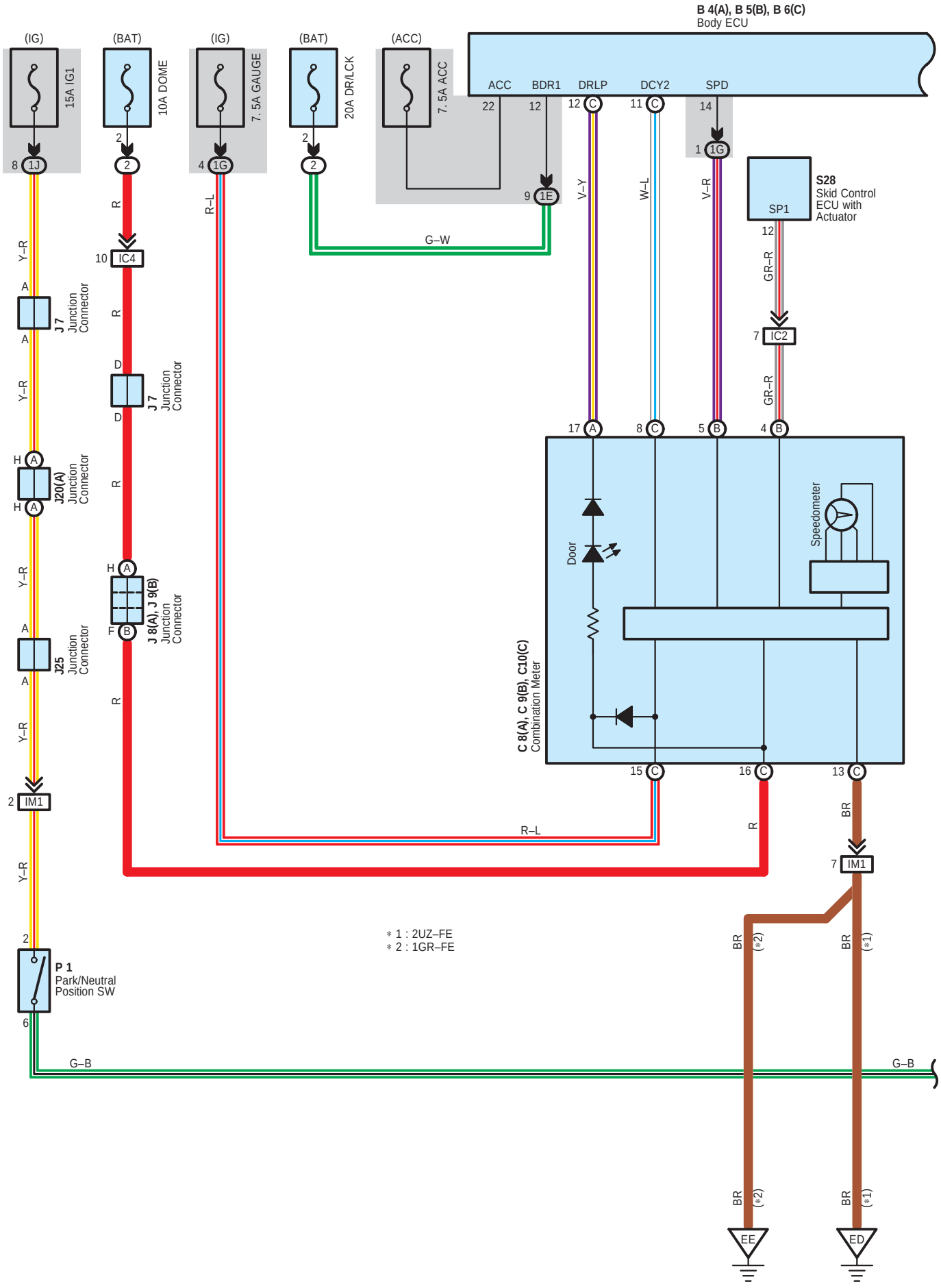

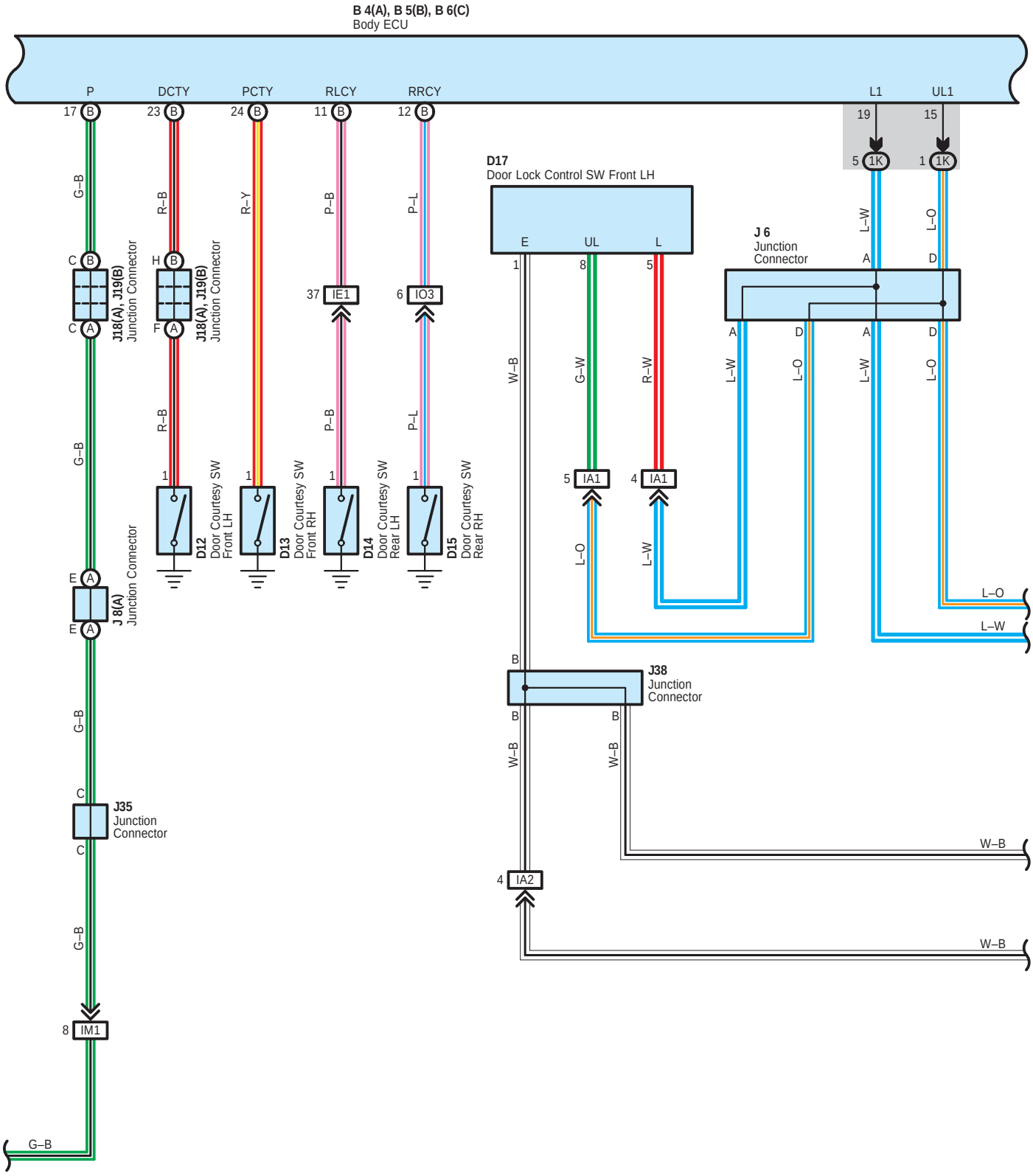
B 4(A), B 5(B), B 6(C)
Body ECU
P
DCTY
PCTY
RLCY
RRCY
L1
UL1
17 B
23 B
24 B
11 B
12 B
19
15
5 1K
1 1K
G–B
R–B
R–Y
P–B
P–L
L–W
L–O
D17
Door Lock Control SW Front LH
E
UL
L
1
8
5
J 6
Junction
Connector
A
D
C B
C A
J18(A), J19(B)
Junction Connector
H B
F A
37 IE1
6 IO3
W–B
G–W
R–W
L–W
L–O
5 IA1
4 IA1
1
D12
Door Courtesy SW
Front LH
D13
Door Courtesy SW
Front RH
D14
Door Courtesy SW
Rear LH
D15
Door Courtesy SW
Rear RH
E A
E A
J 8(A)
Junction Connector
B
J38
Junction
Connector
C
J35
Junction
Connector
4 IA2
8 IM1
G–B
W–B

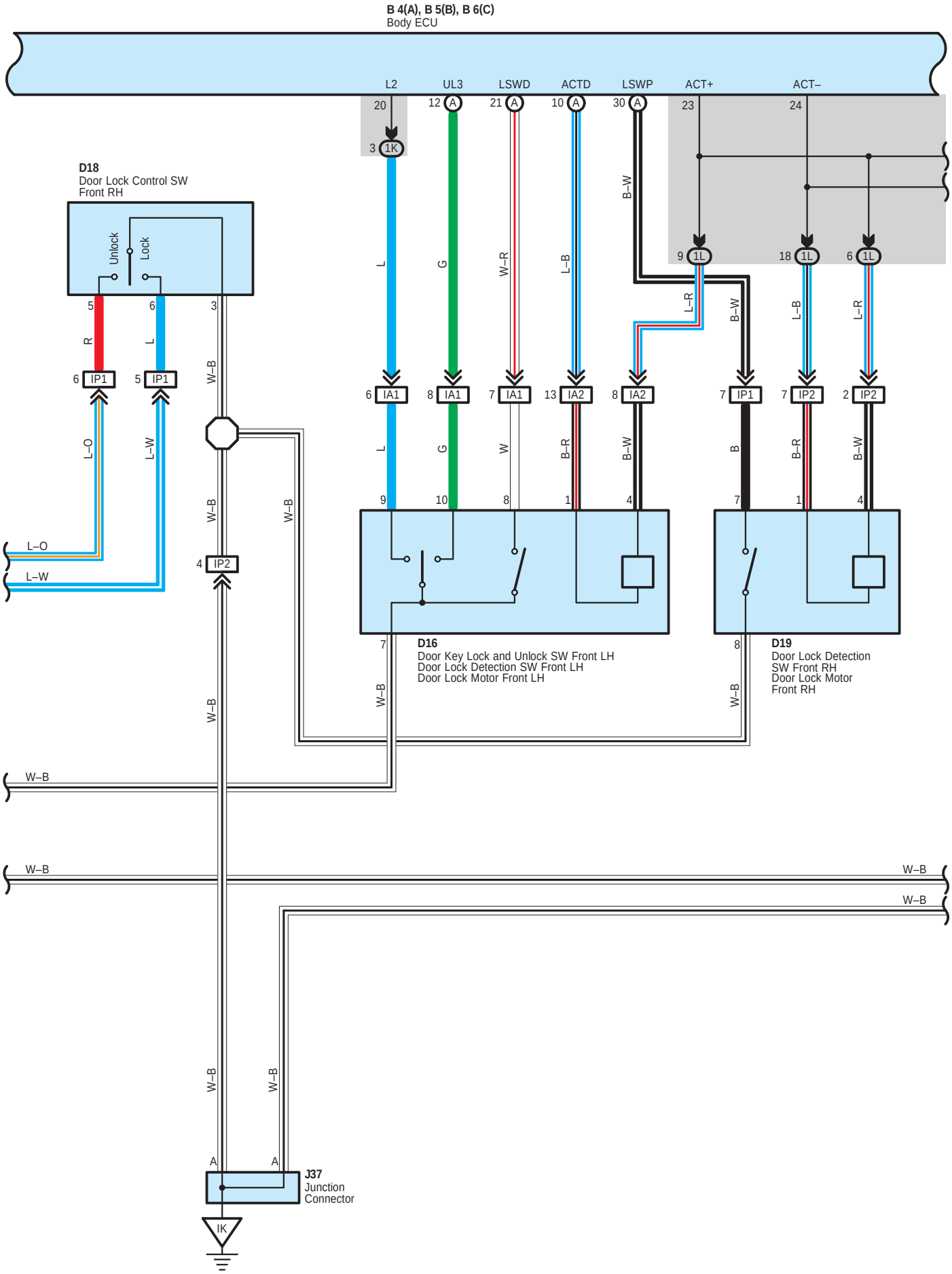
B 4(A), B 5(B), B 6(C)
Body ECU
L2
UL3
LSWD
ACTD
LSWP
ACT+
ACT–
D18
Door Lock Control SW
Front RH
Unlock
Lock
D16
Door Key Lock and Unlock SW Front LH
Door Lock Detection SW Front LH
Door Lock Motor Front LH
D19
Door Lock Detection
SW Front RH
Door Lock Motor
Front RH
J37
Junction
Connector
IK
L–O
L–W
W–B

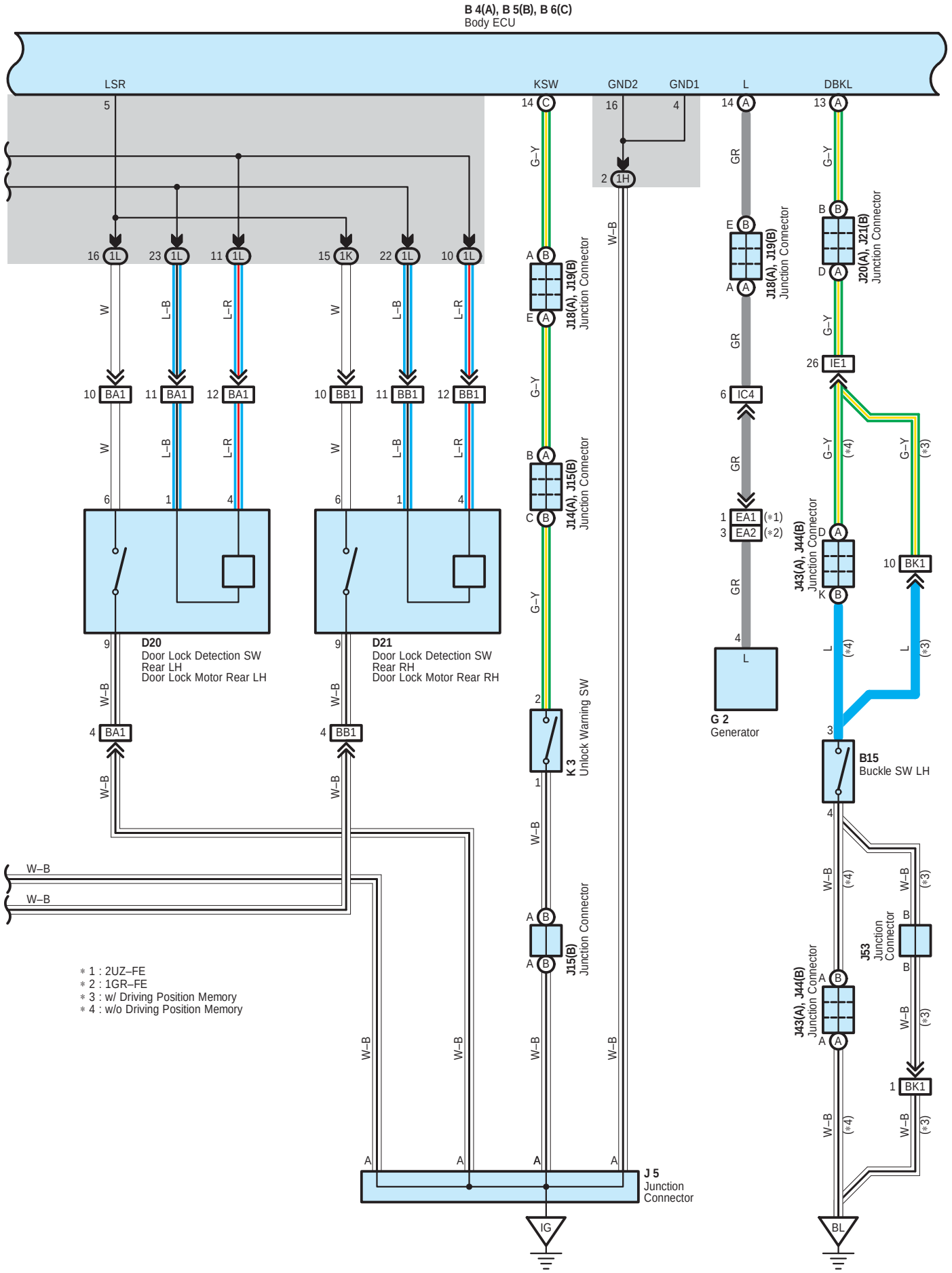
B 4(A), B 5(B), B 6(C)
Body ECU
LSR
KSW
GND2
GND1
L
DBKL
D20
Door Lock Detection SW
Rear LH
Door Lock Motor Rear LH
D21
Door Lock Detection SW
Rear RH
Door Lock Motor Rear RH
J18(A), J19(B)
Junction Connector
J14(A), J15(B)
Junction Connector
J15(B)
Junction Connector
K 3
Unlock Warning SW
G 2
Generator
J18(A), J19(B)
Junction Connector
J20(A), J21(B)
Junction Connector
J43(A), J44(B)
Junction Connector
B15
Buckle SW LH
J53
Junction
Connector
J43(A), J44(B)
Junction Connector
J 5
Junction
Connector
IG
BL
* 1 : 2UZ–FE
* 2 : 1GR–FE
* 3 : w/ Driving Position Memory
* 4 : w/o Driving Position Memory

Door Lock Control

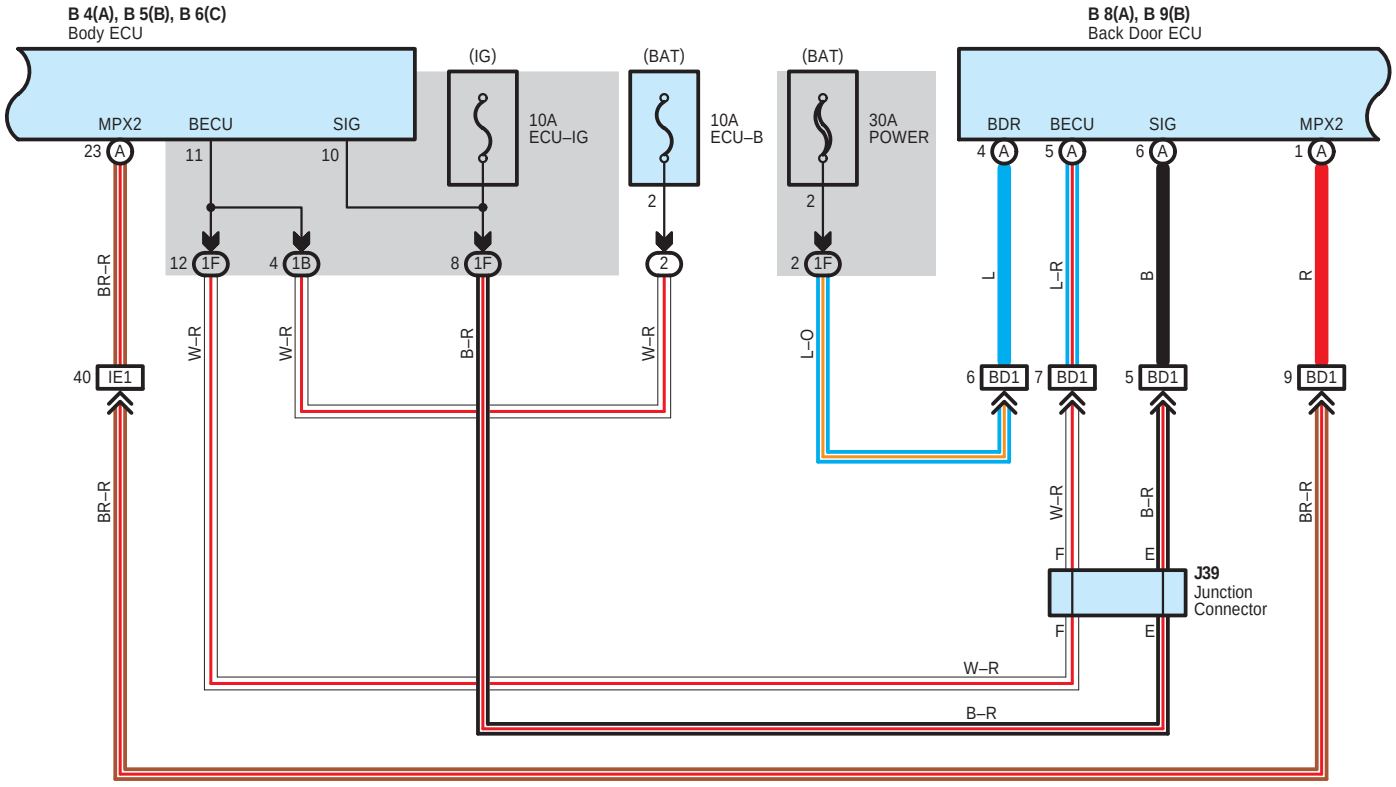

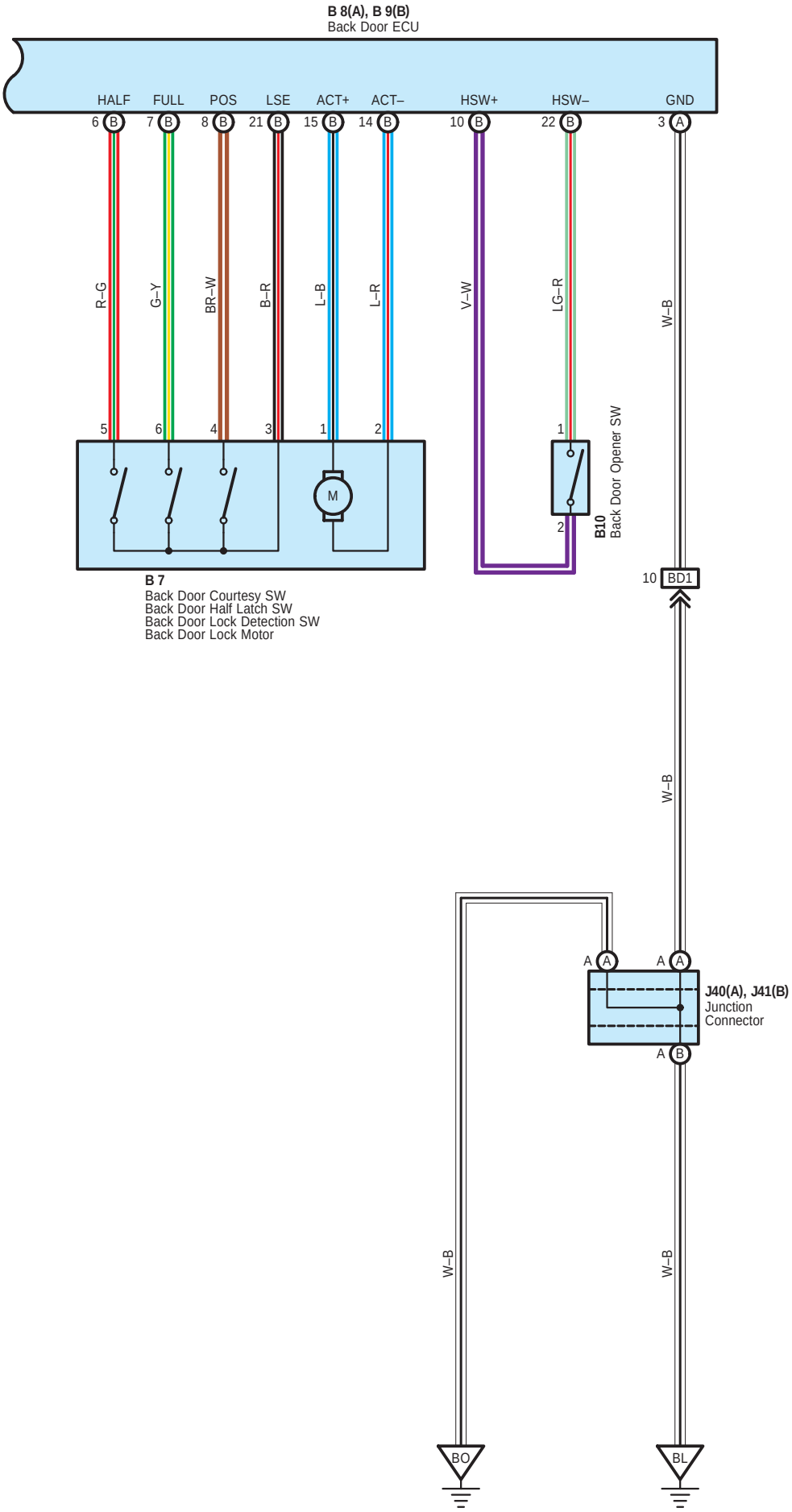
B 8(A), B 9(B)
Back Door ECU
HALF
FULL
POS
LSE
ACT+
ACT–
HSW+
HSW–
GND
6 B
7 B
8 B
21 B
15 B
14 B
10 B
22 B
3 A
R–G
G–Y
BR–W
B–R
L–B
L–R
V–W
LG–R
W–B
5
6
4
3
1
2
1
2
M
B10
Back Door Opener SW
B 7
Back Door Courtesy SW
Back Door Half Latch SW
Back Door Lock Detection SW
Back Door Lock Motor
10 BD1
W–B
A A
A A
J40(A), J41(B)
Junction
Connector
A B
W–B
W–B
BO
BL

Door Lock Control

System Outline

The door lock control is controlled through the various signal input into the body ECU through communication control of the body ECU etc.

1. Manual Unlock Operation

When the door lock control SW of the driver's or passenger's side door is pushed to UNLOCK, the door will unlock.

2. Manual Lock Operation

When the door lock control SW of the driver's or passenger's side door is pushed to LOCK, the door will lock.

3. Door Key Unlock Operation

* Unlock operation from driver's side door
  When the driver's side door is unlocked once using the ignition key, only the driver's side door is unlocked. If this operation is repeated within 3 seconds, all the other doors are unlocked.

4. Ignition Key Reminder Operation

When the door lock operation is made using the door knob with the ignition key remained inserted in the key cylinder and the door open, unlock operation is automatically made. Additionally, if lock operation is made with the door lock control SW or door key lock and unlock SW, unlock operation is automatically made after the lock operation has been completed.

5. Shift–Lever–Interlocked Auto Lock Control

* Auto lock operation
  The auto lock control automatically locks all the doors when the shift lever is put into other position than parking position with all the doors closed, the ignition switch ON, and the engine running.
* Auto unlocking operation
  The auto lock control automatically unlocks all the doors when the shift lever is put into parking position from other position with the ignition switch ON during traveling at a speed not exceeding 16 km/h.

6. Vehicle–Speed–Interlocked Auto Lock Control

* Auto lock operation control
  If any of the doors is not locked with the ignition switch ON and the engine running, the auto lock control automatically locks all the doors when the vehicle has gathered speed reaching or exceeding 20 km/h.
* Unlocking prevention feature
  When the vehicle is traveling at a speed reaching or exceeding 20 km/h, the unlocking function is disabled.
* Auto lock repeat prevention feature
  Once auto lock is activated, auto lock operation cannot not be repeated until a door is opened or the ignition switch is turned OFF with the vehicle traveling at a speed not exceeding 16 km/h.

7. Door–Open/Close–Interlocked Auto Unlocking

When the driver's side door is opened within 10 seconds after the ignition switch is turned OFF, all the doors are unlocked automatically.

* When the battery terminal or fuse is disconnected for some reason, resetting to the initial status is necessary using the door lock control SW front LH (Driver's seat master SW) in accordance with the following procedure:

(1) Reconnect the battery terminal or fuse.

(2) With the back door closed, operate the door lock control SW front LH (Driver's seat master SW) for locking and unlocking.

: Parts Location

Code		See Page	Code		See Page	Code		See Page
B4	A	36	D18		40	J35		38
B5	B	36	D19		40	J37		38
B6	C	36	D20		40	J38		40
B7		40	D21		40	J39		40
B8	A	40	G2		32 (2UZ–FE)	J40	A	40
B9	B	40			34 (1GR–FE)	J41	B	40
B10		40	J5		38	J43	A	42 (*1)
B15		42 (*1)	J6		38			43 (*2)
		43 (*2)	J7		38	J44	B	42 (*1)
C8	A	37	J8	A	38			43 (*2)
C9	B	37	J9	B	38	J53		42 (*1)
C10	C	37	J14	A	38	K3		39
D12		40	J15	B	38	P1		33 (2UZ–FE)
D13		40	J18	A	38			35 (1GR–FE)
D14		40	J19	B	38	S28		33 (2UZ–FE)
D15		40	J20	A	38			35 (1GR–FE)
D16		40	J21	B	38			
D17		40	J25		38			

: Relay Blocks

Code	See Page	Relay Blocks (Relay Block Location)
2	22	Engine Room R/B (Engine Compartment Left)

: Junction Block and Wire Harness Connector

Code	See Page	Junction Block and Wire Harness (Connector Location)
1B	24	Engine Room Main Wire and Driver Side J/B (Lower Finish Panel)
1E		
1F	24	Floor No.2 Wire and Driver Side J/B (Lower Finish Panel)
1G	25	Instrument Panel Wire and Driver Side J/B (Lower Finish Panel)
1H		
1J		
1K		
1L		

: Connector Joining Wire Harness and Wire Harness

Code	See Page	Joining Wire Harness and Wire Harness (Connector Location)
EA1	44 (2UZ–FE)	Engine No.2 Wire and Engine Room Main Wire (Under the Engine Room R/B)
EA2	45 (1GR–FE)	
IA1	46	Front Door LH Wire and Instrument Panel Wire (Left Kick Panel)
IA2		
IC2	46	Instrument Panel Wire and Engine Room Main Wire (Left Kick Panel)
IC4		
IE1	46	Instrument Panel Wire and Floor No.2 Wire (Left Kick Panel)
IM1	47	Engine Wire and Instrument Panel Wire (Right Side of Blower Unit)
IO3	47	Instrument Panel Wire and Floor Wire (Right Kick Panel)
IP1	47	Front Door RH Wire and Instrument Panel Wire (Right Kick Panel)
IP2		
BA1	48	Rear Door No.2 Wire and Instrument Panel Wire (Left Center Pillar)
BB1	48	Rear Door No.1 Wire and Instrument Panel Wire (Right Center Pillar)
BD1	48	Back Door No.1 Wire and Floor No.2 Wire (Left Rear Side of Roof)
BK1	50 (*1)	Floor No.2 Wire and Seat No.2 Wire (Under the Front LH Seat)

* 1 : Power Seat * 2 : Manual Seat

▽ : **Ground Points**

Code	See Page	Ground Points Location
ED	44 (2UZ–FE)	Left Bank Cylinder Head
EE	45 (1GR–FE)	Rear Side of Right Bank Cylinder Block
IG	46	Left Kick Panel
IK	46	Right Kick Panel
BL	48	Floor Seat Crossmember LH
BO	48	Rear Pillar LH

Wireless Door Lock Control

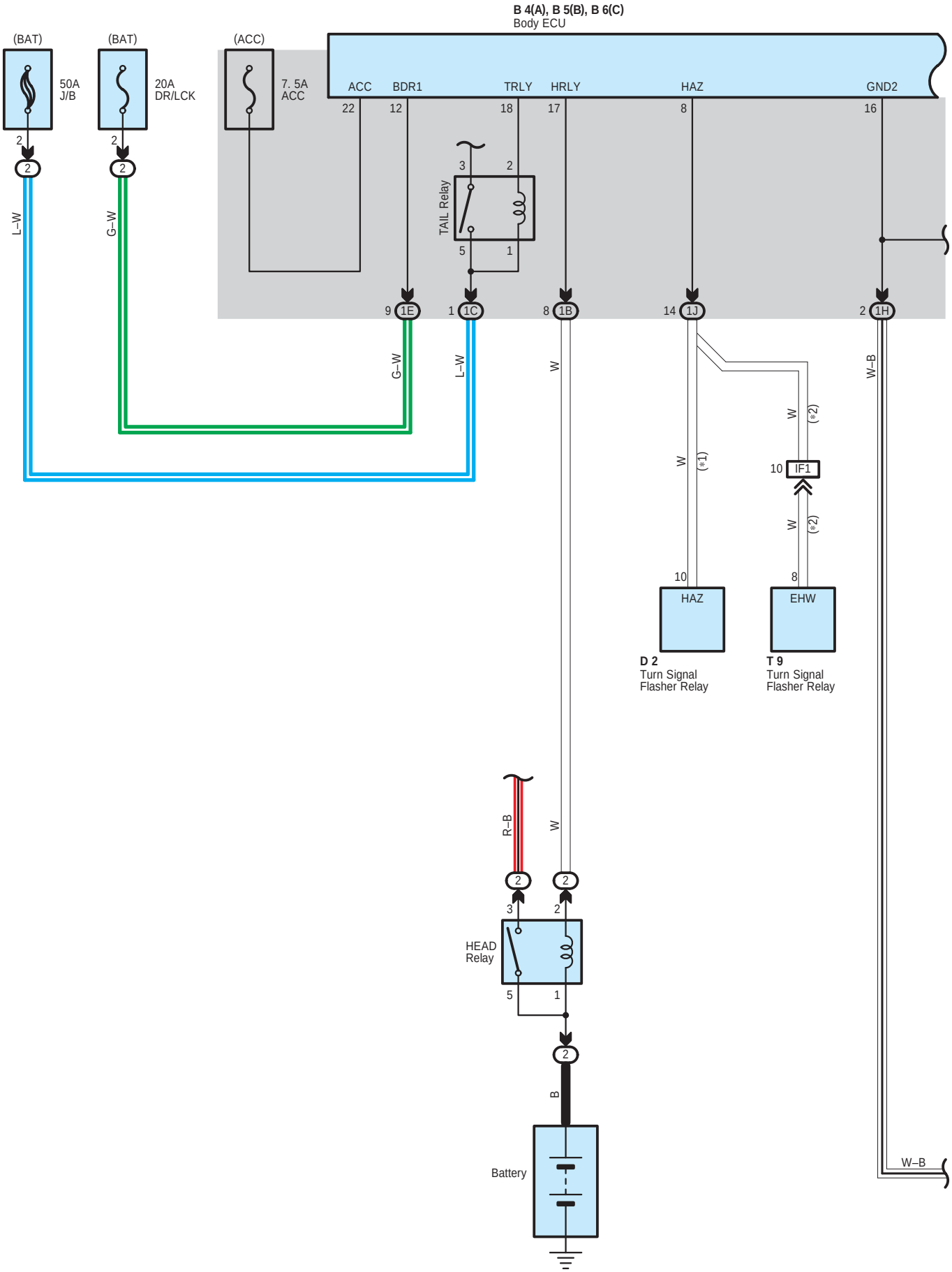

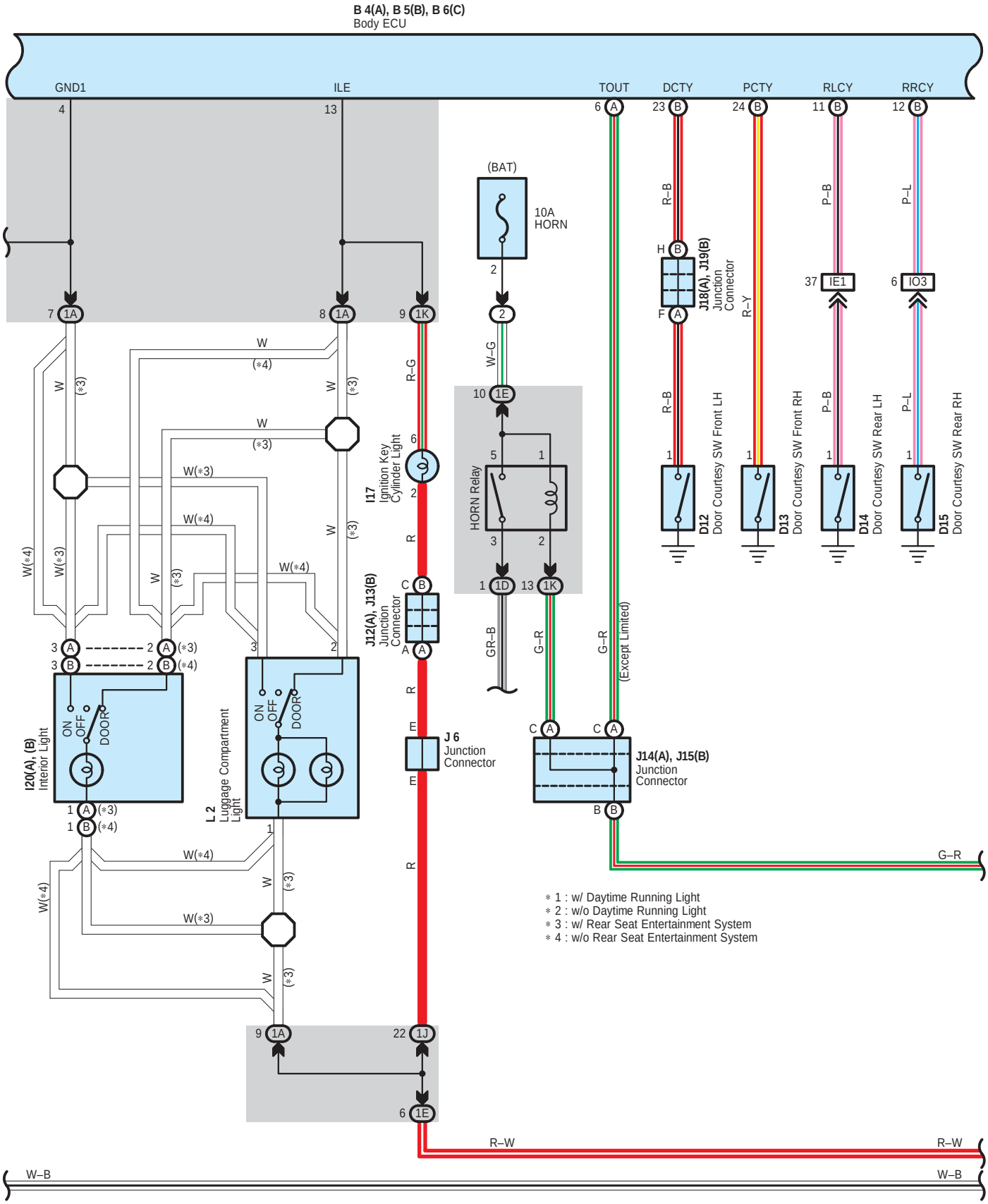
B 4(A), B 5(B), B 6(C)
Body ECU
GND1
ILE
TOUT
DCTY
PCTY
RLCY
RRCY
(BAT)
10A
HORN
HORN Relay
I17
Ignition Key
Cylinder Light
I20(A), (B)
Interior Light
L 2
Luggage Compartment
Light
J12(A), J13(B)
Junction
Connector
J 6
Junction
Connector
J14(A), J15(B)
Junction
Connector
J18(A), J19(B)
Junction
Connector
D12
Door Courtesy SW Front LH
D13
Door Courtesy SW Front RH
D14
Door Courtesy SW Rear LH
D15
Door Courtesy SW Rear RH
(Except Limited)
ON
OFF
DOOR
∗ 1 : w/ Daytime Running Light
∗ 2 : w/o Daytime Running Light
∗ 3 : w/ Rear Seat Entertainment System
∗ 4 : w/o Rear Seat Entertainment System

Wireless Door Lock Control

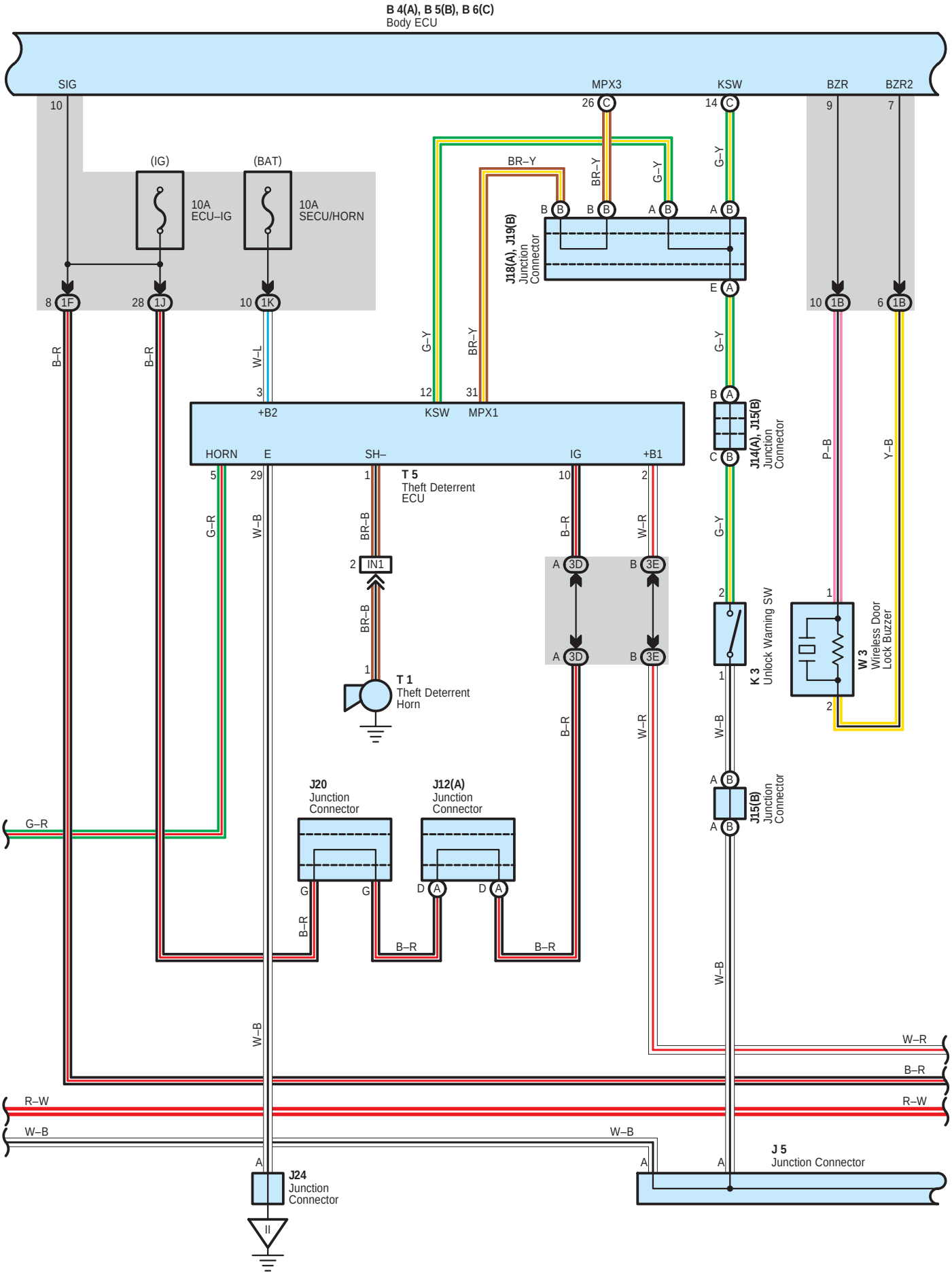

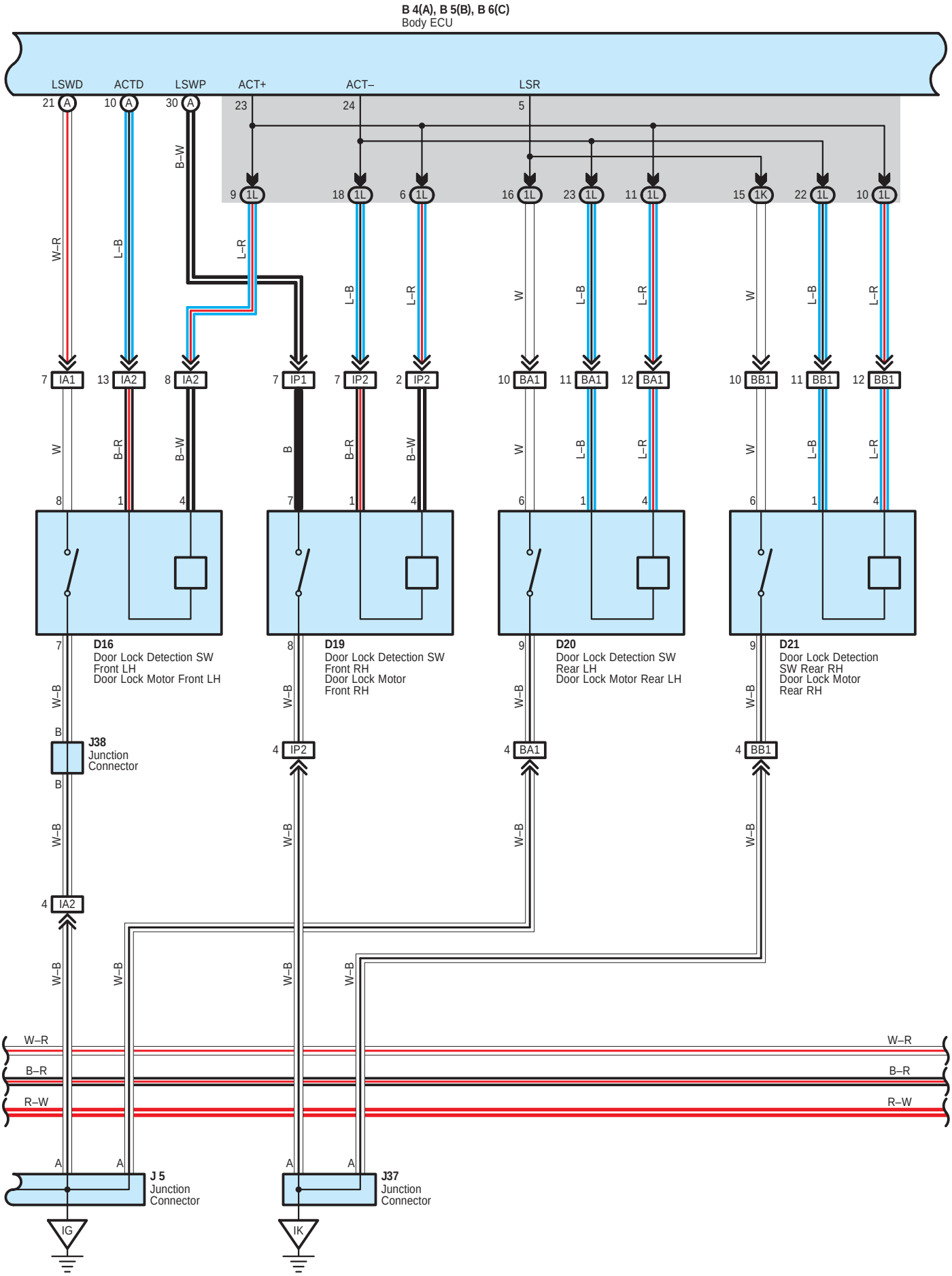
B 4(A), B 5(B), B 6(C)
Body ECU
LSWD
ACTD
LSWP
ACT+
ACT–
LSR
21 A
10 A
30 A
23
24
5
9 1L
18 1L
6 1L
16 1L
23 1L
11 1L
15 1K
22 1L
10 1L
W–R
L–B
B–W
L–R
W
7 IA1
13 IA2
8 IA2
7 IP1
7 IP2
2 IP2
10 BA1
11 BA1
12 BA1
10 BB1
11 BB1
12 BB1
B–R
B
8
1
4
7
6
D16
Door Lock Detection SW
Front LH
Door Lock Motor Front LH
D19
Door Lock Detection SW
Front RH
Door Lock Motor
Front RH
D20
Door Lock Detection SW
Rear LH
Door Lock Motor Rear LH
D21
Door Lock Detection
SW Rear RH
Door Lock Motor
Rear RH
W–B
J38
Junction
Connector
4 IA2
4 IP2
4 BA1
4 BB1
W–R
B–R
R–W
A
J 5
Junction
Connector
J37
Junction
Connector
IG
IK

Wireless Door Lock Control

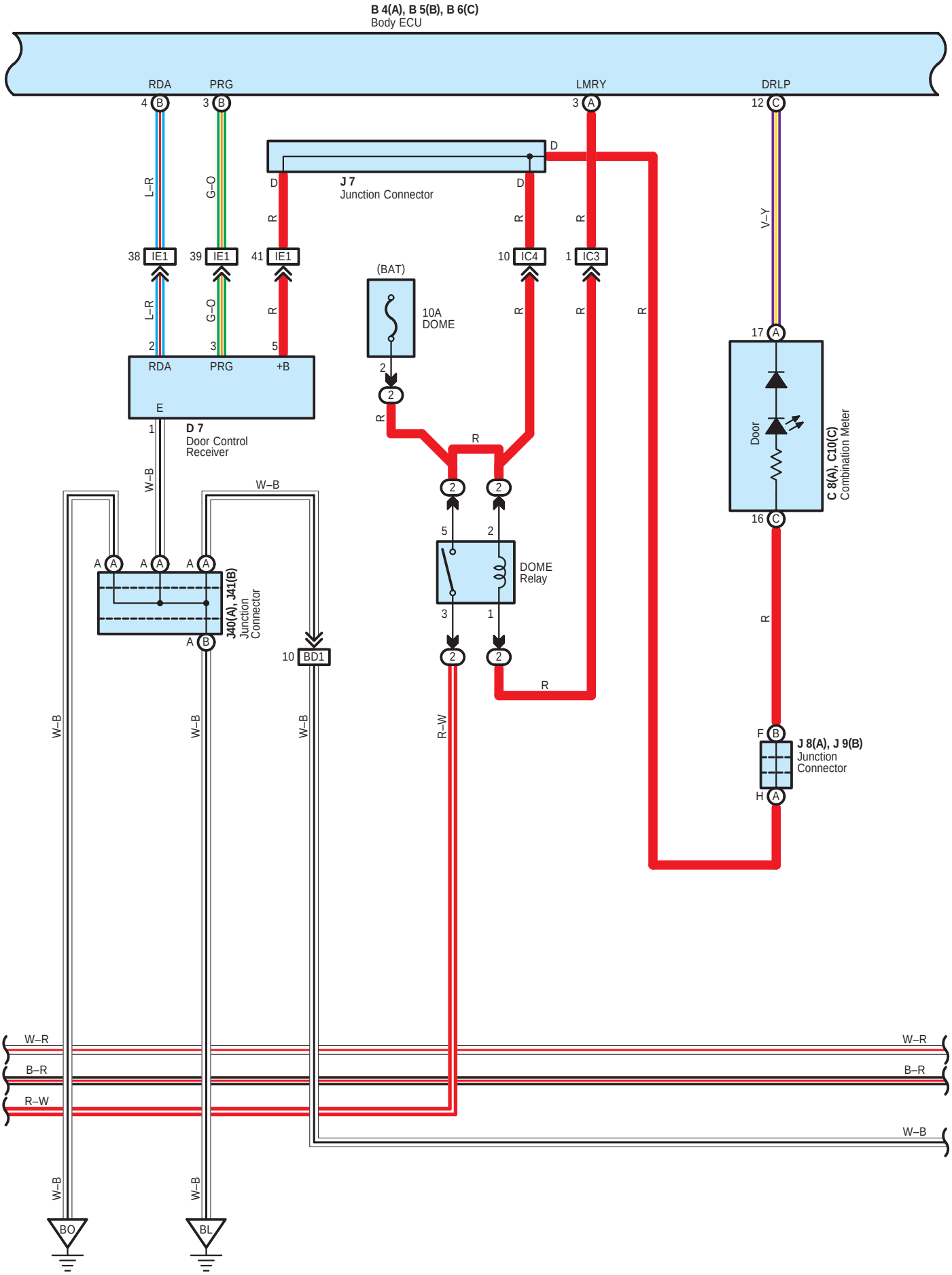

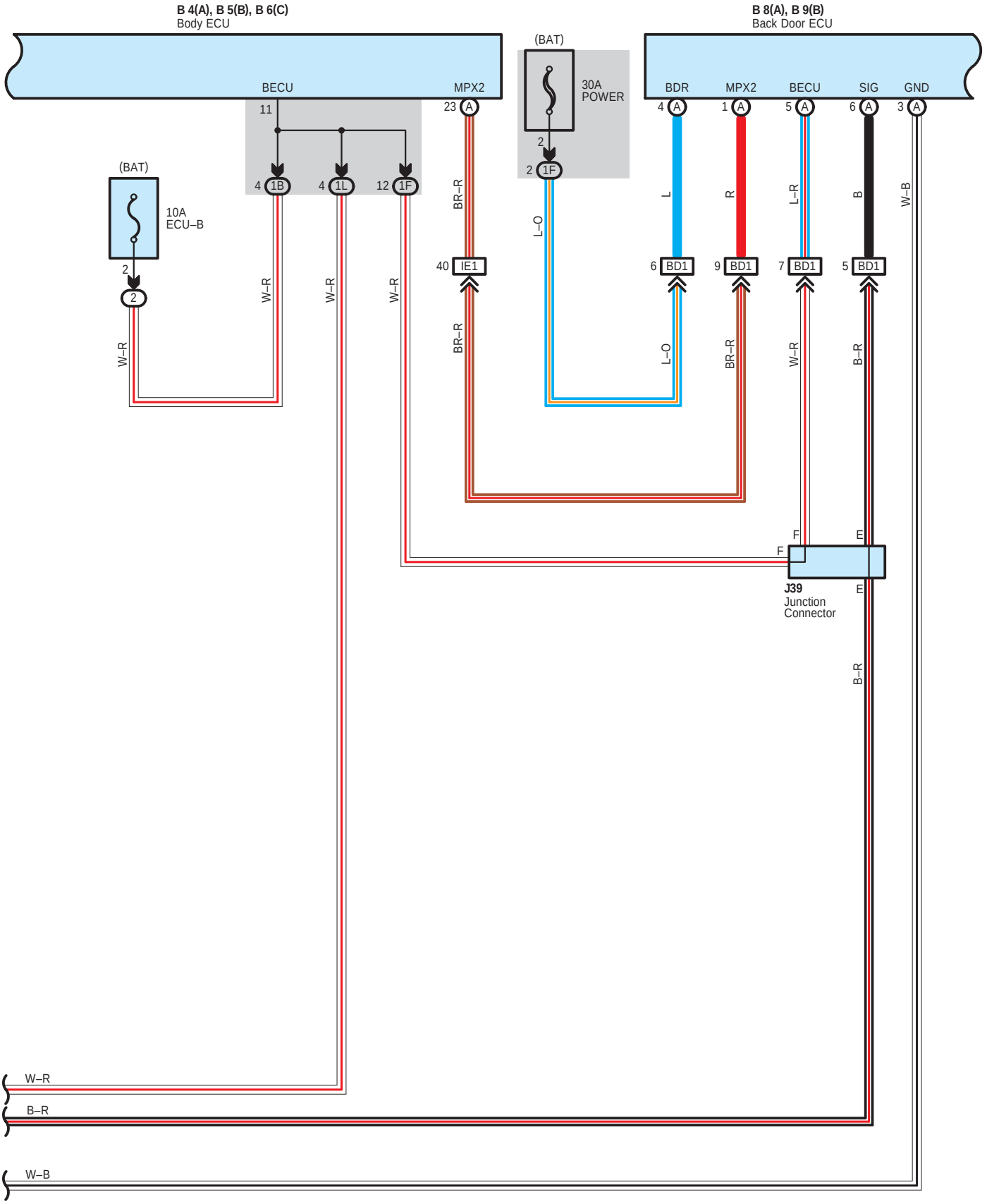
B 4(A), B 5(B), B 6(C)
Body ECU
B 8(A), B 9(B)
Back Door ECU
BECU
MPX2
BDR
MPX2
BECU
SIG
GND
(BAT)
10A
ECU–B
30A
POWER
J39
Junction
Connector
W–R
B–R
W–B
BR–R
L–O
L
R
L–R
B
W–B

Wireless Door Lock Control

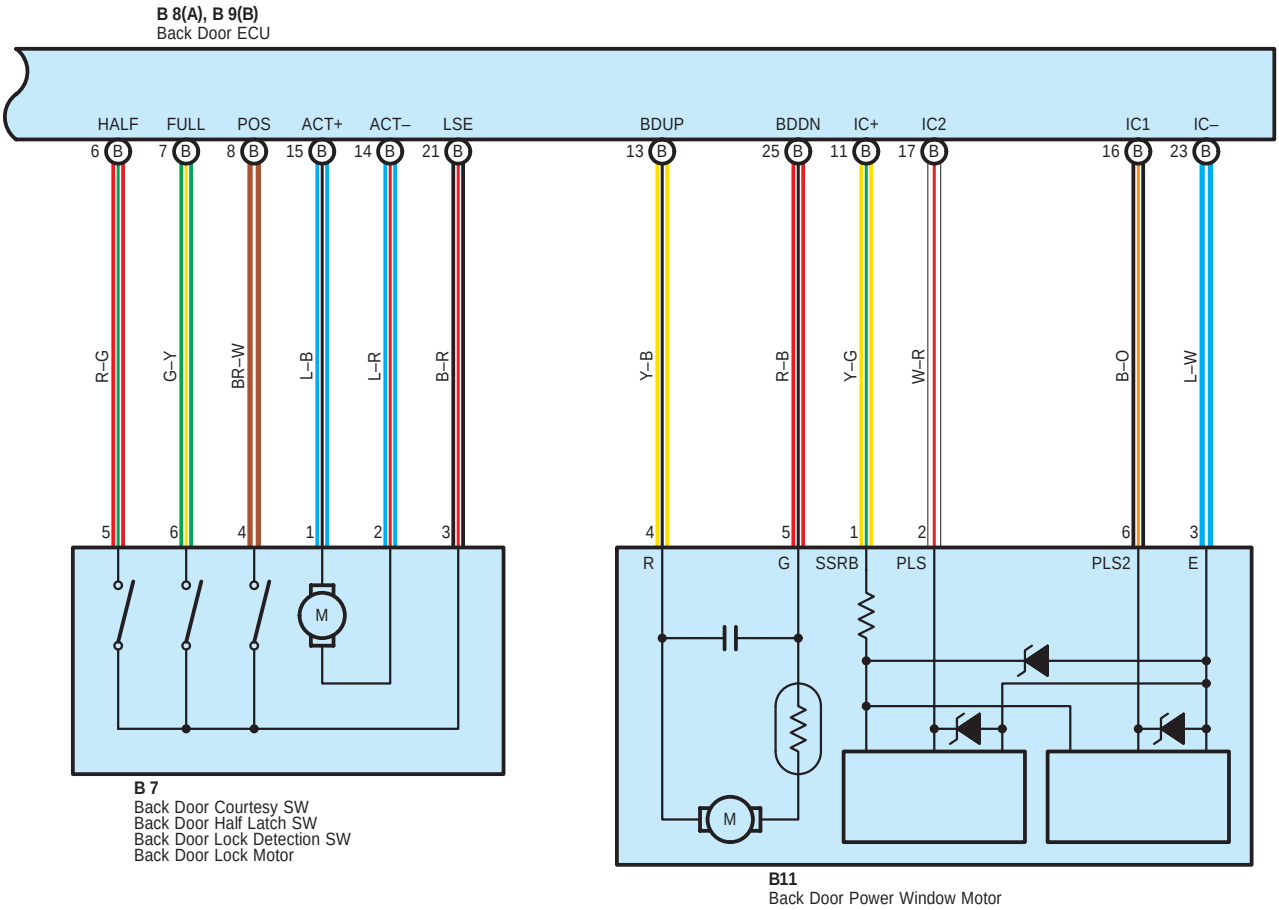

System Outline

Door lock control (Lock and unlock), back window control (Back window open) and panic control (Theft alarm and flash) is performed by remote control, without the ignition key inserted in the door key cylinder, using low–power electrical waves emitted by a transmitter.

1. Normal Operation

∗ Lock operation
When the lock SW on the transmitter is pressed, all the doors are locked.
∗ Unlock operation
When the unlock SW on the transmitter is pressed once, only the driver door is unlocked. When the unlock SW is pressed again within 3 seconds, all the doors are unlocked.

2. Auto Lock Function

When the door is not actually opened within 30 seconds after the door has been unlocked by the unlock SW on the transmitter, all the doors are automatically locked. If any of the following conditions are detected, the wireless door lock does not function.
∗ Any door is opened.
∗ The ignition key is inserted into the ignition SW.
∗ When the lock detection SW of all the doors are locked.

3. Wireless Door Lock Stop Function

If any of the following conditions are detected, the wireless door lock does not function.
Lock operation
∗ When any door is open (Door courtesy SW on)
∗ The ignition key is inserted into the ignition SW (Unlock warning SW on)
∗ Ignition SW is on
Unlock operation
∗ Ignition SW is on

4. Buzzer Sound Function

During lock operation, when the body ECU receives a lock signal from the door lock detection SW, the wireless door lock buzzer goes on once. During unlock operation, when the body ECU receives an unlock signal from the door lock detection SW, the wireless door lock buzzer goes on twice.
With any door open, when the body ECU receives a lock signal from the transmitter, the wireless door lock buzzer goes on for approx. 10 seconds. If the door is closed, or ignition SW is on, or if the unlock signal is received from the transmitter while the buzzer is on, the buzzer stops.

5. Visual Confirmation of Lock or Unlock

During lock operation, when the body ECU receives a lock signal from the door lock detection SW, the turn signal light is flashed once. During unlock operation, when the body ECU receives an unlock signal from the door lock detection SW, the turn signal light is flashed twice.

6. Remote Panic Operation

Panic will function when doors are locked or unlocked, open or closed. When the panic button (Transmitter) is pushed once, interior lights light up, and theft alarm and horn sounds and turn signal light, headlights and taillight flash. Then, the panic or the unlock button (Transmitter) is pushed once more, interior lights are turned off, sounding and flashing will stop. Panic will not function when ignition key is in ignition key cylinder.

7. Repeat Function

If the lock detection signal in response to the output signal is not received after the body ECU has output the lock signal, the lock signal is output again.

8. Buzzer Volume Control

The volume of the wireless door lock buzzer can be set among 5 steps by operating the transmitter, when the ignition SW is off, any door open, and the ignition key is not in the ignition key cylinder.

9. Back Window Control

When the ignition SW is off, the ignition key is not inserted into the ignition key cylinder, the back window can be opened by pressing the back window open SW of the transmitter for approximately 0.8 seconds. At that time, the wireless door lock buzzer beeps once.

10. Illuminated Entry Function

When the body ECU detects the unlock state after the unlock operation has been made, it turns on the lights, such as the ignition key cylinder light and interior light for approx. 15 sec. If all the doors are locked during this operation, lighting is cancelled and the lights immediately fade out.

Wireless Door Lock Control

○ : Parts Location

Code	See Page	Code	See Page	Code	See Page
B4 A	36	D19	40	J19 B	38
B5 B	36	D20	40	J20	38
B6 C	36	D21	40	J24	38
B7	40	I17	37	J37	38
B8 A	40	I20 A	40	J38	40
B9 B	40	I20 B	40	J39	40
B11	40	J5	38	J40 A	40
C8 A	37	J6	38	J41 B	40
C10 C	37	J7	38	K3	39
D2	37	J8 A	38	L2	40
D7	40	J9 B	38	T1	33 (2UZ–FE)
D12	40	J12 A	38		35 (1GR–FE)
D13	40	J13 B	38	T5	39
D14	40	J14 A	38	T9	39
D15	40	J15 B	38	W3	33 (2UZ–FE)
D16	40	J18 A	38		35 (1GR–FE)

⬭ : Relay Blocks

Code	See Page	Relay Blocks (Relay Block Location)
2	22	Engine Room R/B (Engine Compartment Left)

⬭ : Junction Block and Wire Harness Connector

Code	See Page	Junction Block and Wire Harness (Connector Location)
1A	24	Roof Wire and Driver Side J/B (Lower Finish Panel)
1B	24	Engine Room Main Wire and Driver Side J/B (Lower Finish Panel)
1C		
1D		
1E		
1F	24	Floor No.2 Wire and Driver Side J/B (Lower Finish Panel)
1H	25	Instrument Panel Wire and Driver Side J/B (Lower Finish Panel)
1J		
1K		
1L		
3D	28	Instrument Panel Wire and Center J/B (Instrument Panel Brace RH)
3E		

▭ : Connector Joining Wire Harness and Wire Harness

Code	See Page	Joining Wire Harness and Wire Harness (Connector Location)
IA1	46	Front Door LH Wire and Instrument Panel Wire (Left Kick Panel)
IA2		
IC3	46	Instrument Panel Wire and Engine Room Main Wire (Left Kick Panel)
IC4		
IE1	46	Instrument Panel Wire and Floor No.2 Wire (Left Kick Panel)
IF1	46	Instrument Panel Wire and Relay Wire (Behind the Instrument Panel J/B)
IN1	47	Instrument Panel Wire and Engine Room Main Wire (Right Kick Panel)
IO3	47	Instrument Panel Wire and Floor Wire (Right Kick Panel)
IP1	47	Front Door RH Wire and Instrument Panel Wire (Right Kick Panel)
IP2		
BA1	48	Rear Door No.2 Wire and Instrument Panel Wire (Left Center Pillar)
BB1	48	Rear Door No.1 Wire and Instrument Panel Wire (Right Center Pillar)
BD1	48	Back Door No.1 Wire and Floor No.2 Wire (Left Rear Side of Roof)

▽ : **Ground Points**

Code	See Page	Ground Points Location
IG	46	Left Kick Panel
II	46	Instrument Panel Brace RH
IK	46	Right Kick Panel
BL	48	Floor Seat Crossmember LH
BO	48	Rear Pillar LH

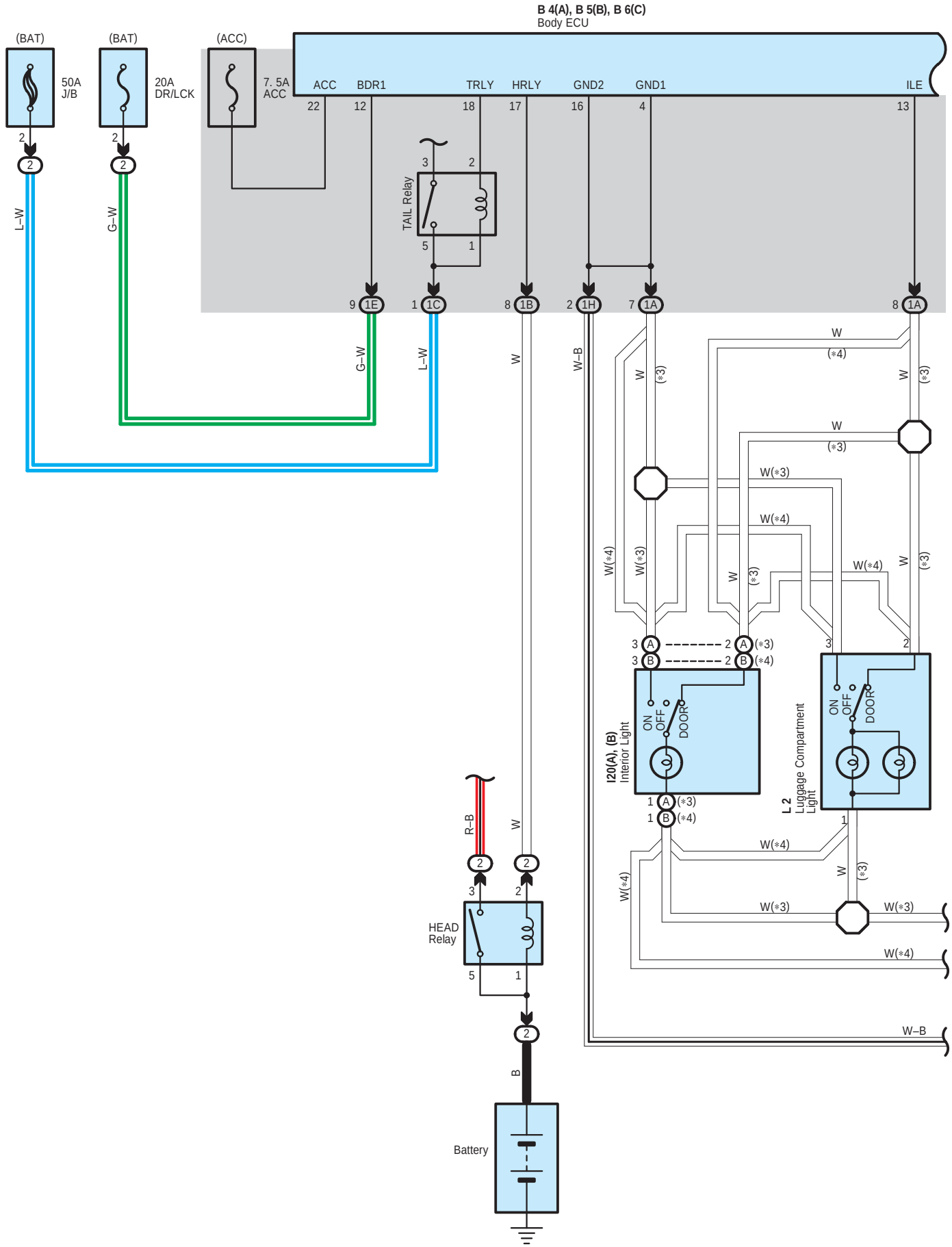
B 4(A), B 5(B), B 6(C)
Body ECU
(BAT)
(BAT)
(ACC)
50A
J/B
20A
DR/LCK
7. 5A
ACC
ACC
BDR1
TRLY
HRLY
GND2
GND1
ILE
22
12
18
17
16
4
13
TAIL Relay
HEAD
Relay
Battery
L–W
G–W
R–B
W
W–B
B
1E
1C
1B
1H
1A
I20(A), (B)
Interior Light
L 2
Luggage Compartment
Light
ON
OFF
DOOR
W(∗3)
W(∗4)

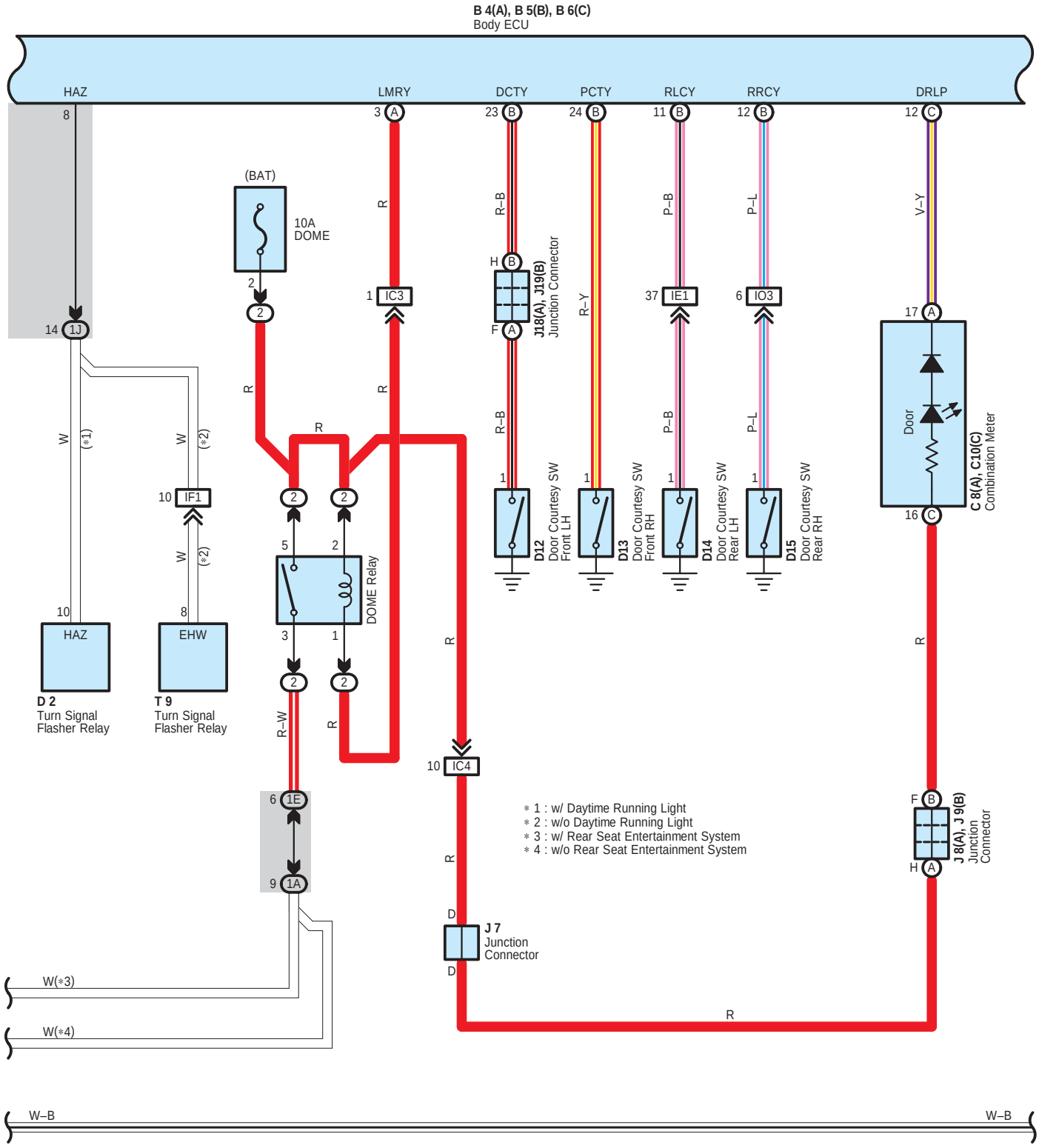
B 4(A), B 5(B), B 6(C)
Body ECU
HAZ
LMRY
DCTY
PCTY
RLCY
RRCY
DRLP
(BAT)
10A
DOME
IC3
IC4
IF1
IE1
IO3
1J
1E
1A
J18(A), J19(B)
Junction Connector
D12 Door Courtesy SW Front LH
D13 Door Courtesy SW Front RH
D14 Door Courtesy SW Rear LH
D15 Door Courtesy SW Rear RH
C 8(A), C10(C)
Combination Meter
Door
DOME Relay
D 2
Turn Signal Flasher Relay
T 9
Turn Signal Flasher Relay
J 7
Junction Connector
J 8(A), J 9(B)
Junction Connector
HAZ
EHW
W(*3)
W(*4)
W–B
W–B
* 1 : w/ Daytime Running Light
* 2 : w/o Daytime Running Light
* 3 : w/ Rear Seat Entertainment System
* 4 : w/o Rear Seat Entertainment System

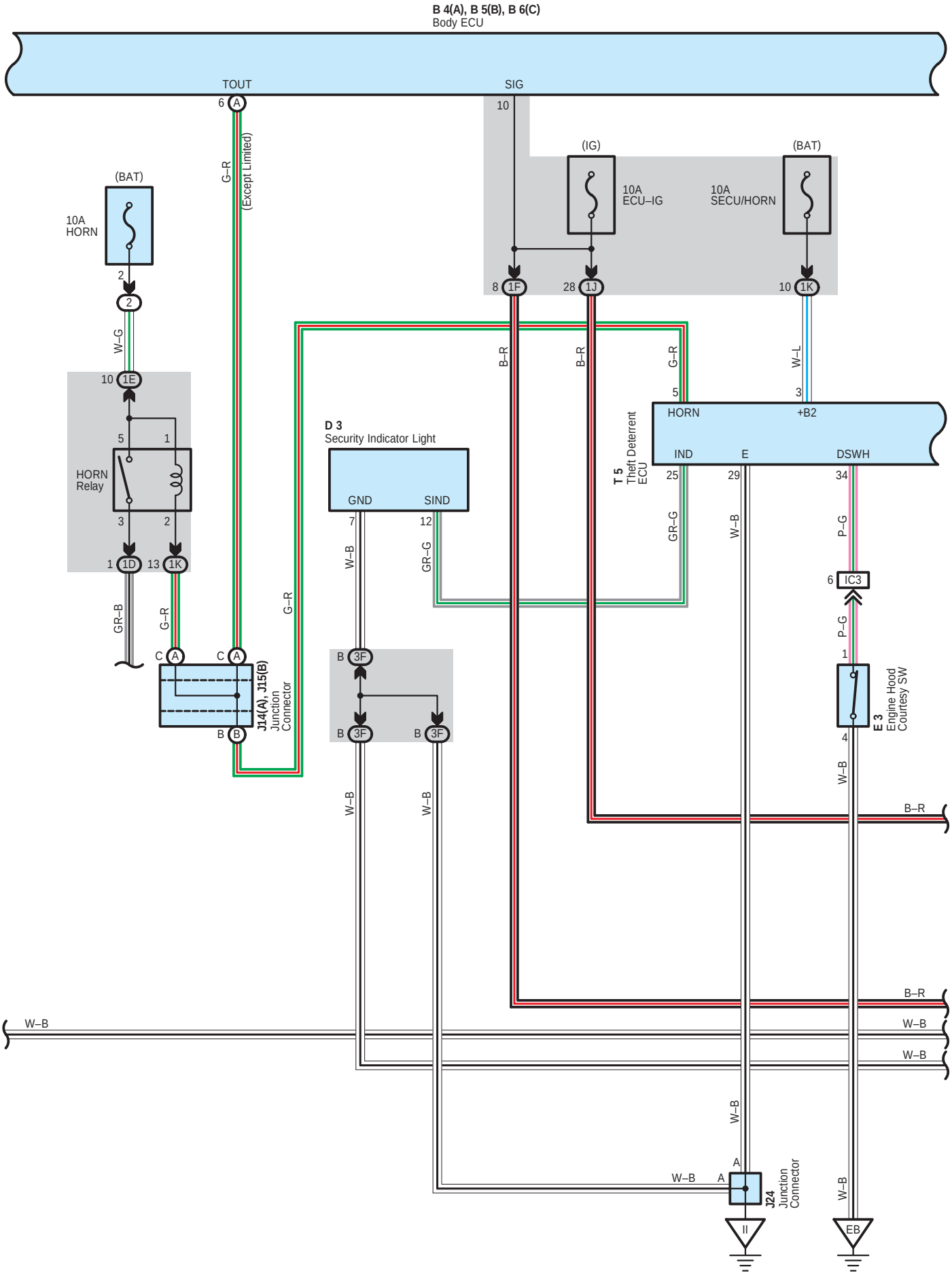
B 4(A), B 5(B), B 6(C)
Body ECU
TOUT
SIG
6 A
10
(IG)
(BAT)
10A
ECU–IG
10A
SECU/HORN
(BAT)
10A
HORN
2
2
W–G
10 1E
5 1
HORN
Relay
3 2
1 1D 13 1K
GR–B
G–R
C A
C A
B B
J14(A), J15(B)
Junction
Connector
G–R
(Except Limited)
G–R
8 1F
28 1J
10 1K
B–R
B–R
G–R
W–L
5
3
HORN
+B2
D 3
Security Indicator Light
GND
SIND
7
12
W–B
GR–G
T 5
Theft Deterrent
ECU
IND
E
DSWH
25
29
34
GR–G
W–B
P–G
6 IC3
P–G
1
E 3
Engine Hood
Courtesy SW
4
W–B
B 3F
B 3F
B 3F
W–B
W–B
B–R
B–R
W–B
W–B
W–B
W–B
A
W–B
A
J24
Junction
Connector
W–B
II
EB

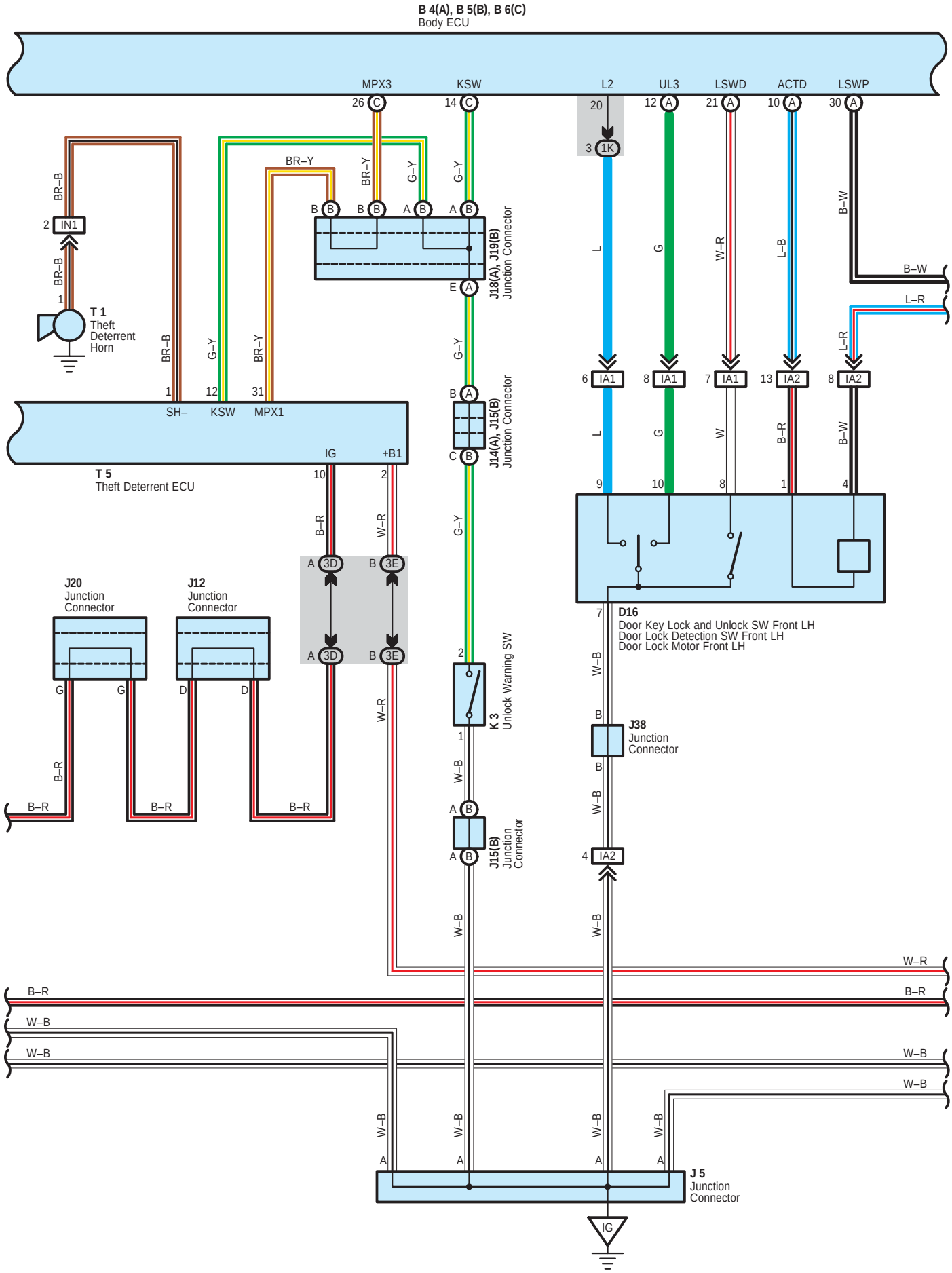
B 4(A), B 5(B), B 6(C)
Body ECU
MPX3
KSW
L2
UL3
LSWD
ACTD
LSWP
T 1
Theft Deterrent Horn
T 5
Theft Deterrent ECU
J18(A), J19(B) Junction Connector
J14(A), J15(B) Junction Connector
J15(B) Junction Connector
J20 Junction Connector
J12 Junction Connector
K 3
Unlock Warning SW
D16
Door Key Lock and Unlock SW Front LH
Door Lock Detection SW Front LH
Door Lock Motor Front LH
J38 Junction Connector
J 5 Junction Connector
IG

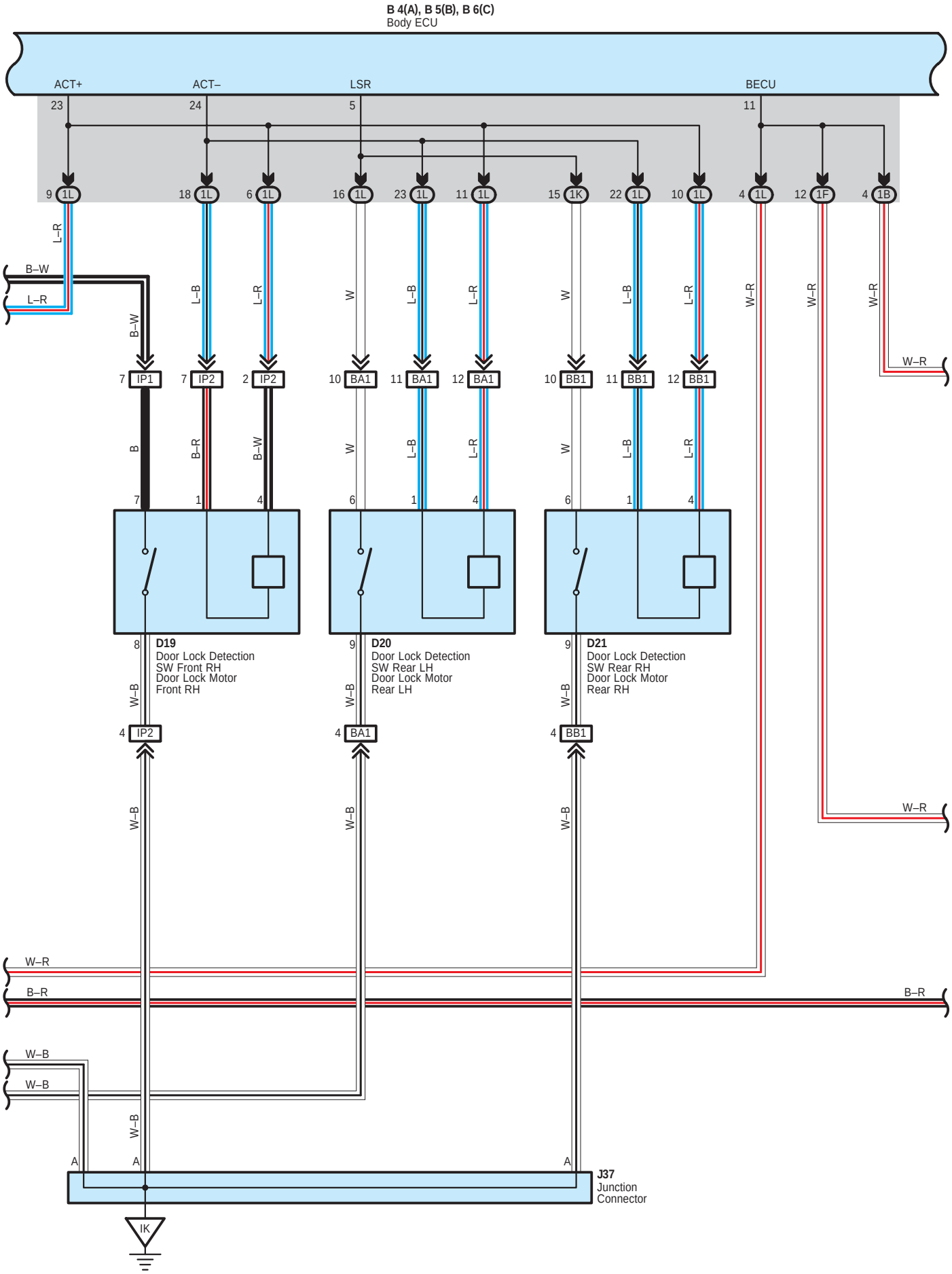
B 4(A), B 5(B), B 6(C)
Body ECU
ACT+
ACT–
LSR
BECU
23
24
5
11
9 1L
18 1L
6 1L
16 1L
23 1L
11 1L
15 1K
22 1L
10 1L
4 1L
12 1F
4 1B
L–R
B–W
L–R
L–B
L–R
W
L–B
L–R
W
L–B
L–R
W–R
W–R
W–R
W–R
7 IP1
7 IP2
2 IP2
10 BA1
11 BA1
12 BA1
10 BB1
11 BB1
12 BB1
B
B–R
B–W
W
L–B
L–R
W
L–B
L–R
7
1
4
6
1
4
6
1
4
8
D19
Door Lock Detection
SW Front RH
Door Lock Motor
Front RH
9
D20
Door Lock Detection
SW Rear LH
Door Lock Motor
Rear LH
9
D21
Door Lock Detection
SW Rear RH
Door Lock Motor
Rear RH
W–B
W–B
W–B
4 IP2
4 BA1
4 BB1
W–B
W–B
W–B
W–R
W–R
B–R
B–R
W–B
W–B
W–B
A
A
A
J37
Junction
Connector
IK

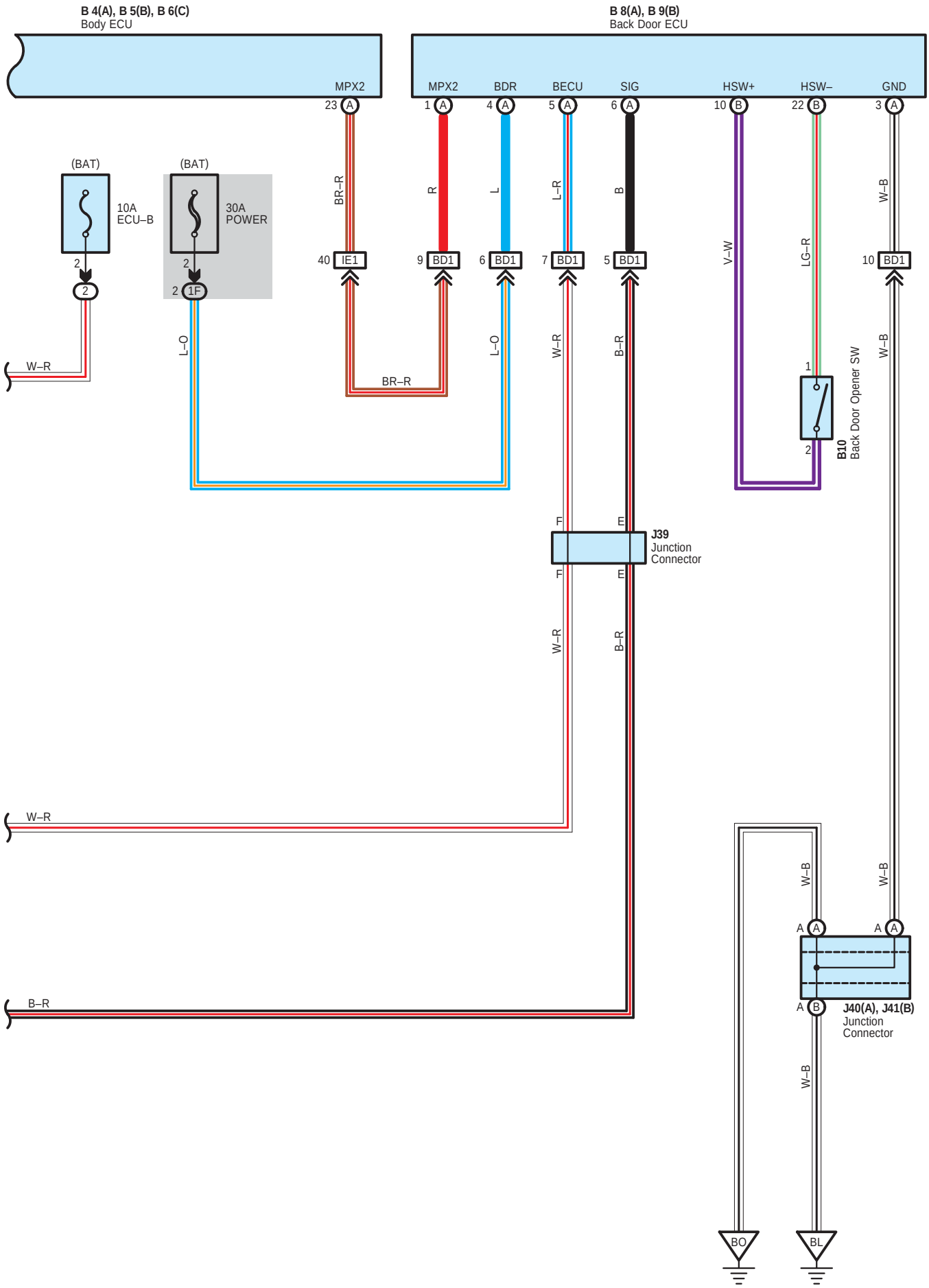
B 4(A), B 5(B), B 6(C)
Body ECU
B 8(A), B 9(B)
Back Door ECU
MPX2
MPX2
BDR
BECU
SIG
HSW+
HSW–
GND
23 A
1 A
4 A
5 A
6 A
10 B
22 B
3 A
(BAT)
(BAT)
10A
ECU–B
30A
POWER
2
2
2
2 1F
BR–R
R
L
L–R
B
V–W
LG–R
W–B
40 IE1
9 BD1
6 BD1
7 BD1
5 BD1
10 BD1
L–O
L–O
W–R
BR–R
W–R
B–R
1
2
B10
Back Door Opener SW
F
E
J39
Junction
Connector
F
E
W–R
B–R
W–R
W–B
W–B
A A
A B
J40(A), J41(B)
Junction
Connector
W–B
BO
BL

: Parts Location

Code	See Page	Code	See Page	Code	See Page
B4 A	36	D19	40	J19 B	38
B5 B	36	D20	40	J20	38
B6 C	36	D21	40	J24	38
B8 A	40	E3	32 (2UZ–FE)	J37	38
B9 B	40		34 (1GR–FE)	J38	40
B10	40	I20 A	40	J39	40
C8 A	37	I20 B	40	J40 A	40
C10 C	37	J5	38	J41 B	40
D2	37	J7	38	K3	39
D3	37	J8 A	38	L2	40
D12	40	J9 B	38	T1	33 (2UZ–FE)
D13	40	J12	38		35 (1GR–FE)
D14	40	J14 A	38	T5	39
D15	40	J15 B	38	T9	39
D16	40	J18 A	38		

: Relay Blocks

Code	See Page	Relay Blocks (Relay Block Location)
2	22	Engine Room R/B (Engine Compartment Left)

: Junction Block and Wire Harness Connector

Code	See Page	Junction Block and Wire Harness (Connector Location)
1A	24	Roof Wire and Driver Side J/B (Lower Finish Panel)
1B	24	Engine Room Main Wire and Driver Side J/B (Lower Finish Panel)
1C		
1D		
1E		
1F	24	Floor No.2 Wire and Driver Side J/B (Lower Finish Panel)
1H	25	Instrument Panel Wire and Driver Side J/B (Lower Finish Panel)
1J		
1K		
1L		
3D	28	Instrument Panel Wire and Center J/B (Instrument Panel Brace RH)
3E		
3F		

: Connector Joining Wire Harness and Wire Harness

Code	See Page	Joining Wire Harness and Wire Harness (Connector Location)
IA1	46	Front Door LH Wire and Instrument Panel Wire (Left Kick Panel)
IA2		
IC3	46	Instrument Panel Wire and Engine Room Main Wire (Left Kick Panel)
IC4		
IE1	46	Instrument Panel Wire and Floor No.2 Wire (Left Kick Panel)
IF1	46	Instrument Panel Wire and Relay Wire (Behind the Instrument Panel J/B)
IN1	47	Instrument Panel Wire and Engine Room Main Wire (Right Kick Panel)
IO3	47	Instrument Panel Wire and Floor Wire (Right Kick Panel)
IP1	47	Front Door RH Wire and Instrument Panel Wire (Right Kick Panel)
IP2		
BA1	48	Rear Door No.2 Wire and Instrument Panel Wire (Left Center Pillar)
BB1	48	Rear Door No.1 Wire and Instrument Panel Wire (Right Center Pillar)
BD1	48	Back Door No.1 Wire and Floor No.2 Wire (Left Rear Side of Roof)

▽ : **Ground Points**

Code	See Page	Ground Points Location
EB	44 (2UZ–FE)	Front Left Fender
	45 (1GR–FE)	
IG	46	Left Kick Panel
II	46	Instrument Panel Brace RH
IK	46	Right Kick Panel
BL	48	Floor Seat Crossmember LH
BO	48	Rear Pillar LH

ECT and A/T Indicator for 2UZ–FE

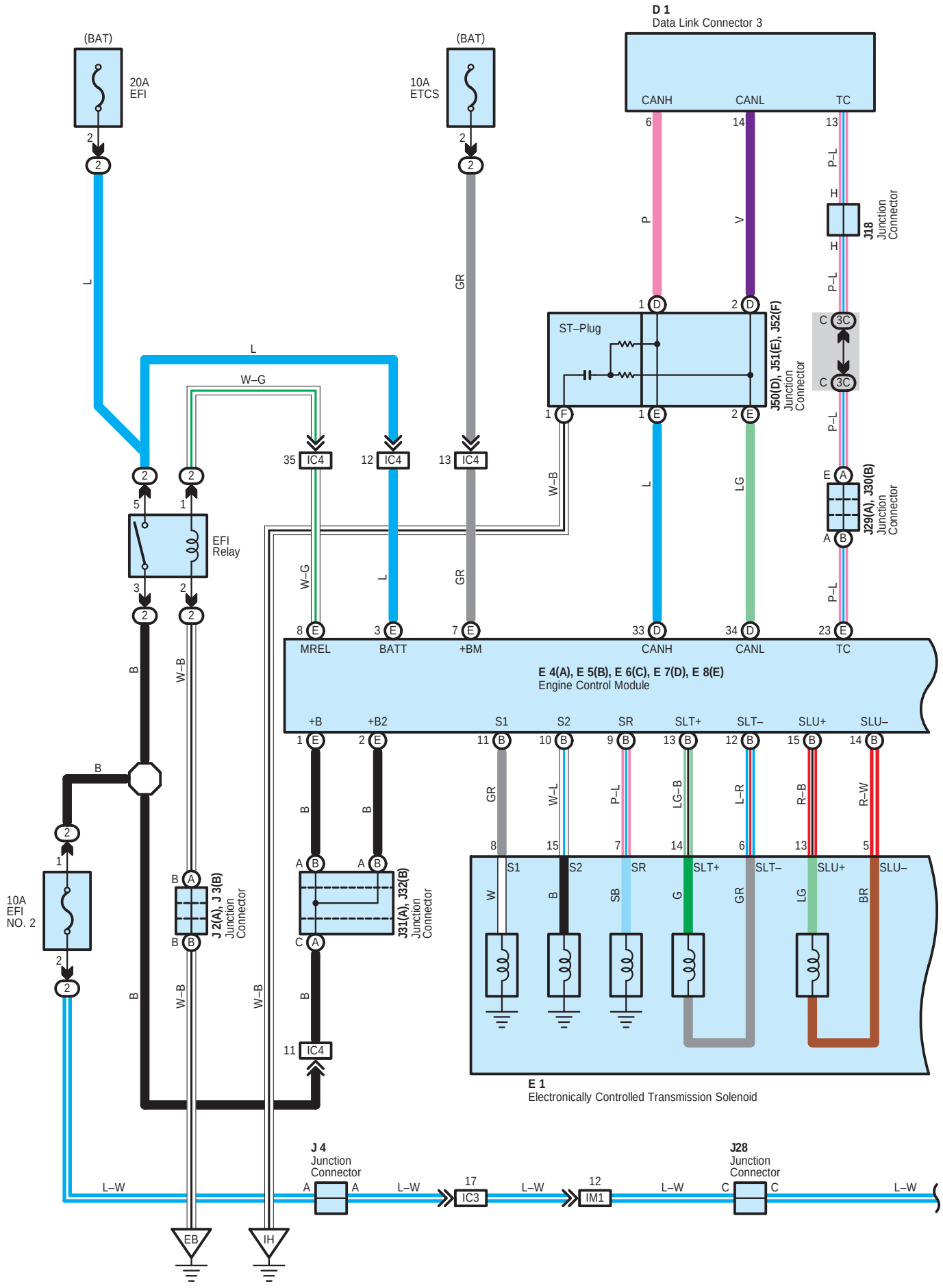

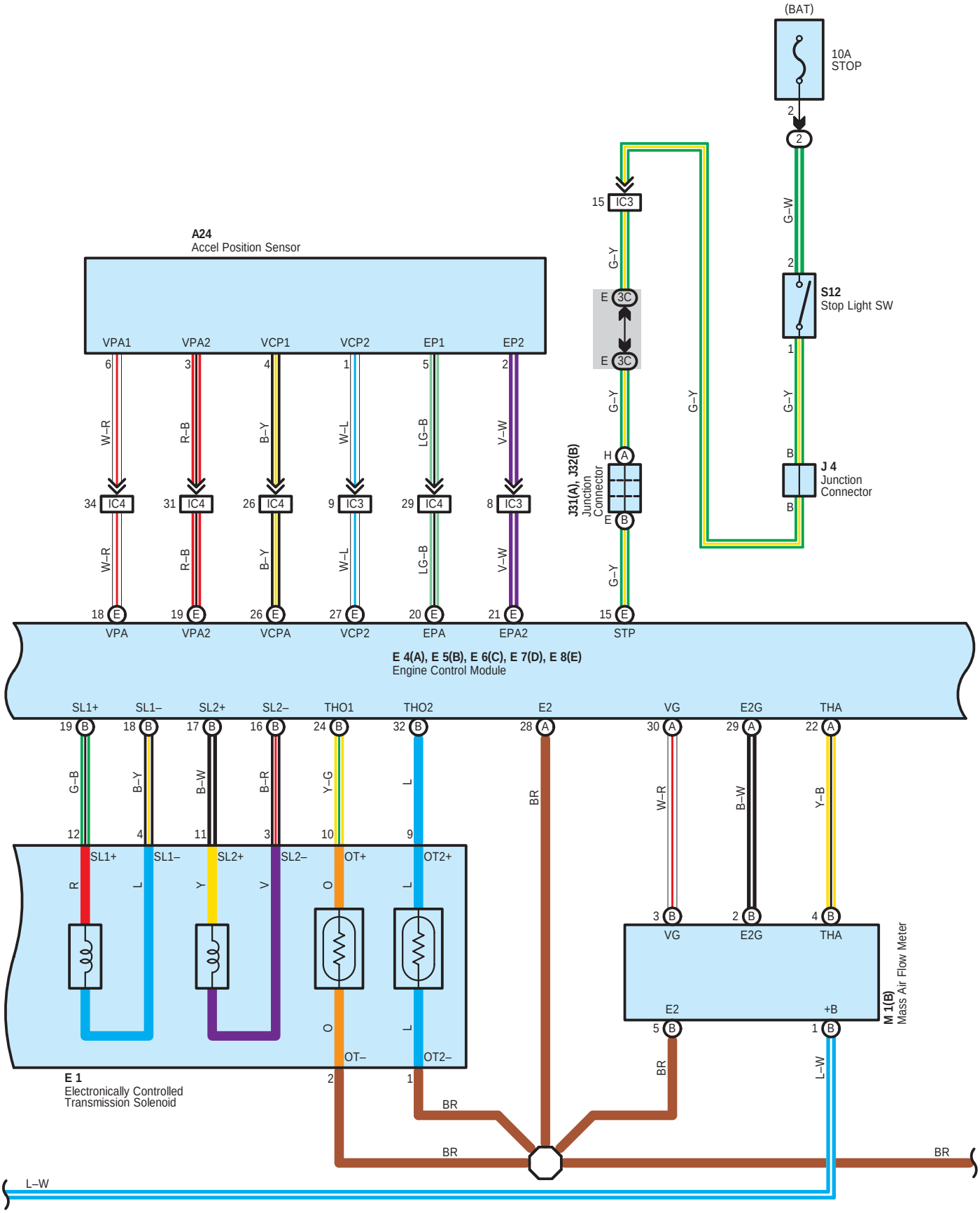
(BAT)
10A
STOP
2
2
G–W
2
S12
Stop Light SW
1
G–Y
B
J 4
Junction
Connector
B
15 IC3
G–Y
E 3C
E 3C
G–Y
H A
J31(A), J32(B)
Junction
Connector
E B
G–Y
15 E
STP
G–Y
A24
Accel Position Sensor
VPA1
VPA2
VCP1
VCP2
EP1
EP2
6
3
4
1
5
2
W–R
R–B
B–Y
W–L
LG–B
V–W
34 IC4
31 IC4
26 IC4
9 IC3
29 IC4
8 IC3
W–R
R–B
B–Y
W–L
LG–B
V–W
18 E
19 E
26 E
27 E
20 E
21 E
VPA
VPA2
VCPA
VCP2
EPA
EPA2
E 4(A), E 5(B), E 6(C), E 7(D), E 8(E)
Engine Control Module
SL1+
SL1–
SL2+
SL2–
THO1
THO2
E2
VG
E2G
THA
19 B
18 B
17 B
16 B
24 B
32 B
28 A
30 A
29 A
22 A
G–B
B–Y
B–W
B–R
Y–G
L
BR
W–R
B–W
Y–B
12
4
11
3
10
9
SL1+
SL1–
SL2+
SL2–
OT+
OT2+
R
L
Y
V
O
L
3 B
2 B
4 B
VG
E2G
THA
E2
+B
5 B
1 B
M 1(B)
Mass Air Flow Meter
O
L
OT–
OT2–
BR
L–W
2
1
E 1
Electronically Controlled
Transmission Solenoid
BR
BR
BR
L–W

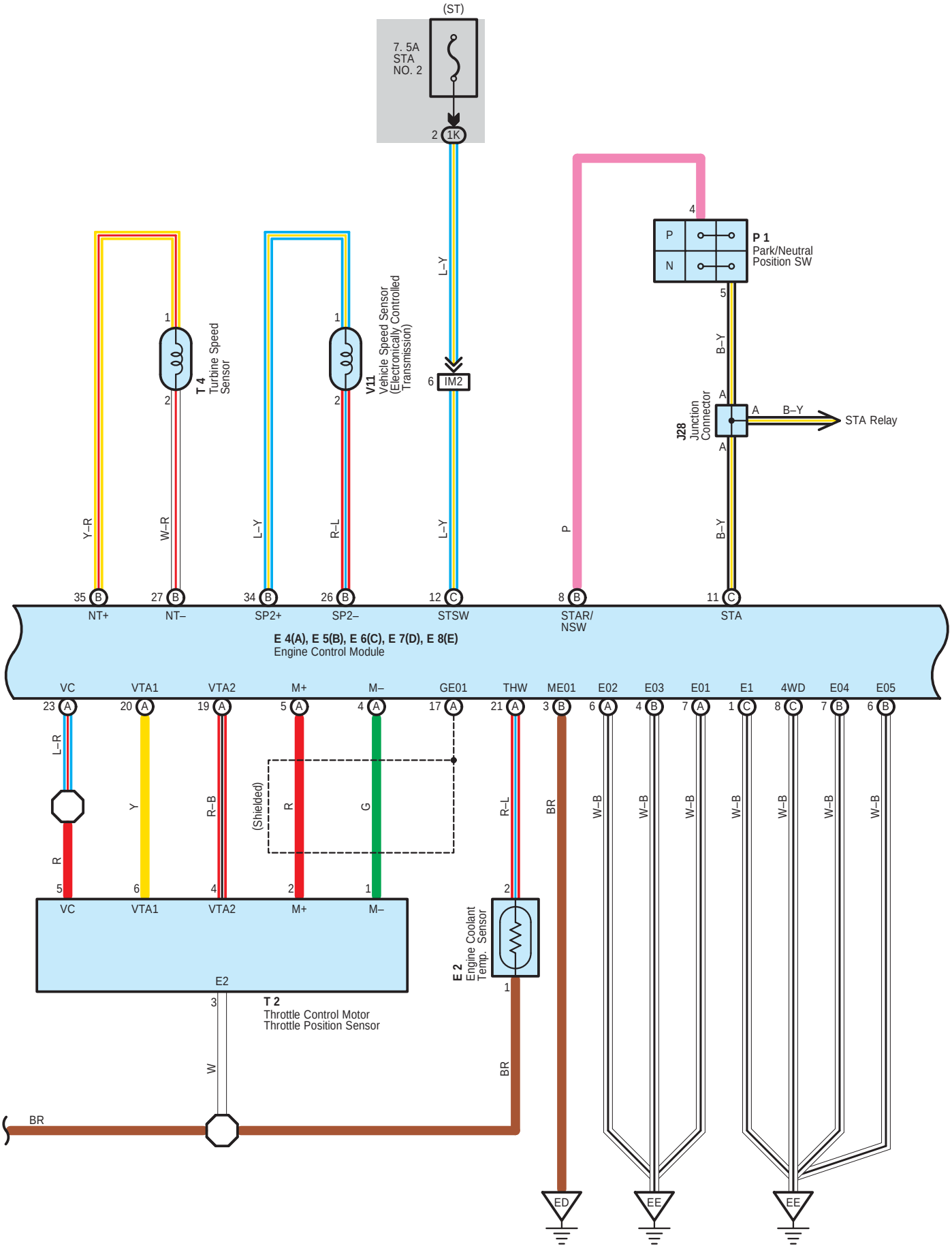
(ST)
7. 5A
STA
NO. 2
2 1K
L–Y
6 IM2
4
P
N
P 1
Park/Neutral
Position SW
5
B–Y
A
J28
Junction
Connector
A
B–Y
STA Relay
A
B–Y
T 4
Turbine Speed
Sensor
V11
Vehicle Speed Sensor
(Electronically Controlled
Transmission)
Y–R
W–R
L–Y
R–L
L–Y
P
B–Y
35 B NT+
27 B NT–
34 B SP2+
26 B SP2–
12 C STSW
8 B STAR/
NSW
11 C STA
E 4(A), E 5(B), E 6(C), E 7(D), E 8(E)
Engine Control Module
VC
VTA1
VTA2
M+
M–
GE01
THW
ME01
E02
E03
E01
E1
4WD
E04
E05
23 A
20 A
19 A
5 A
4 A
17 A
21 A
3 B
6 A
4 B
7 A
1 C
8 C
7 B
6 B
L–R
R
Y
R–B
(Shielded)
R
G
R–L
BR
W–B
W–B
W–B
W–B
W–B
W–B
5
6
4
2
1
2
1
VC
VTA1
VTA2
M+
M–
E2
E 2
Engine Coolant
Temp. Sensor
3
T 2
Throttle Control Motor
Throttle Position Sensor
W
BR
BR
ED
EE
EE

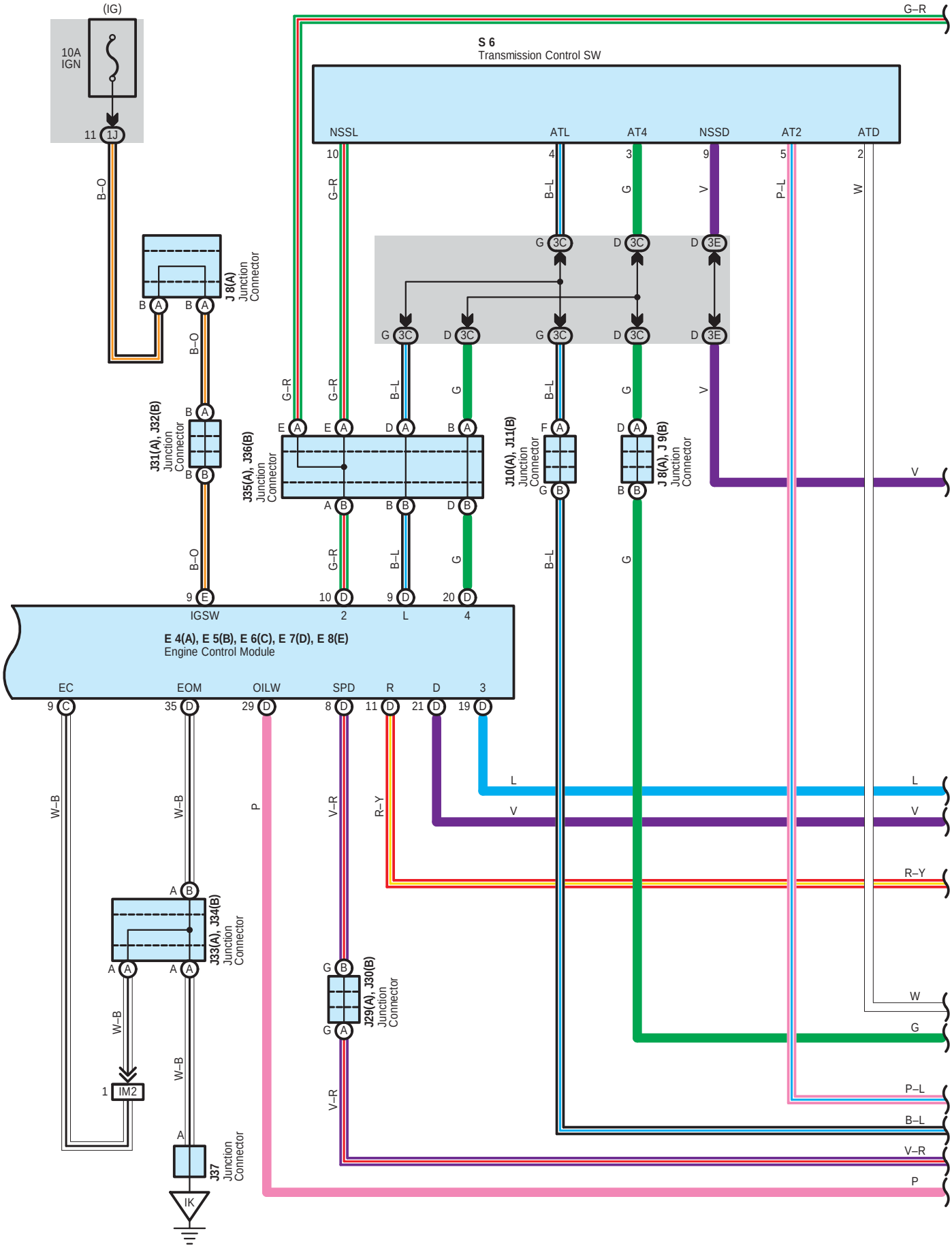
(IG)
10A
IGN
11
1J
B–O
S 6
Transmission Control SW
NSSL
ATL
AT4
NSSD
AT2
ATD
G–R
B–L
G
V
P–L
W
J 8(A)
Junction
Connector
J31(A), J32(B)
Junction
Connector
J35(A), J36(B)
Junction
Connector
J10(A), J11(B)
Junction
Connector
J 8(A), J 9(B)
Junction
Connector
IGSW
E 4(A), E 5(B), E 6(C), E 7(D), E 8(E)
Engine Control Module
EC
EOM
OILW
SPD
R
D
3
W–B
P
V–R
R–Y
L
J33(A), J34(B)
Junction
Connector
J29(A), J30(B)
Junction
Connector
IM2
J37
Junction
Connector
IK

ECT and A/T Indicator for 2UZ–FE

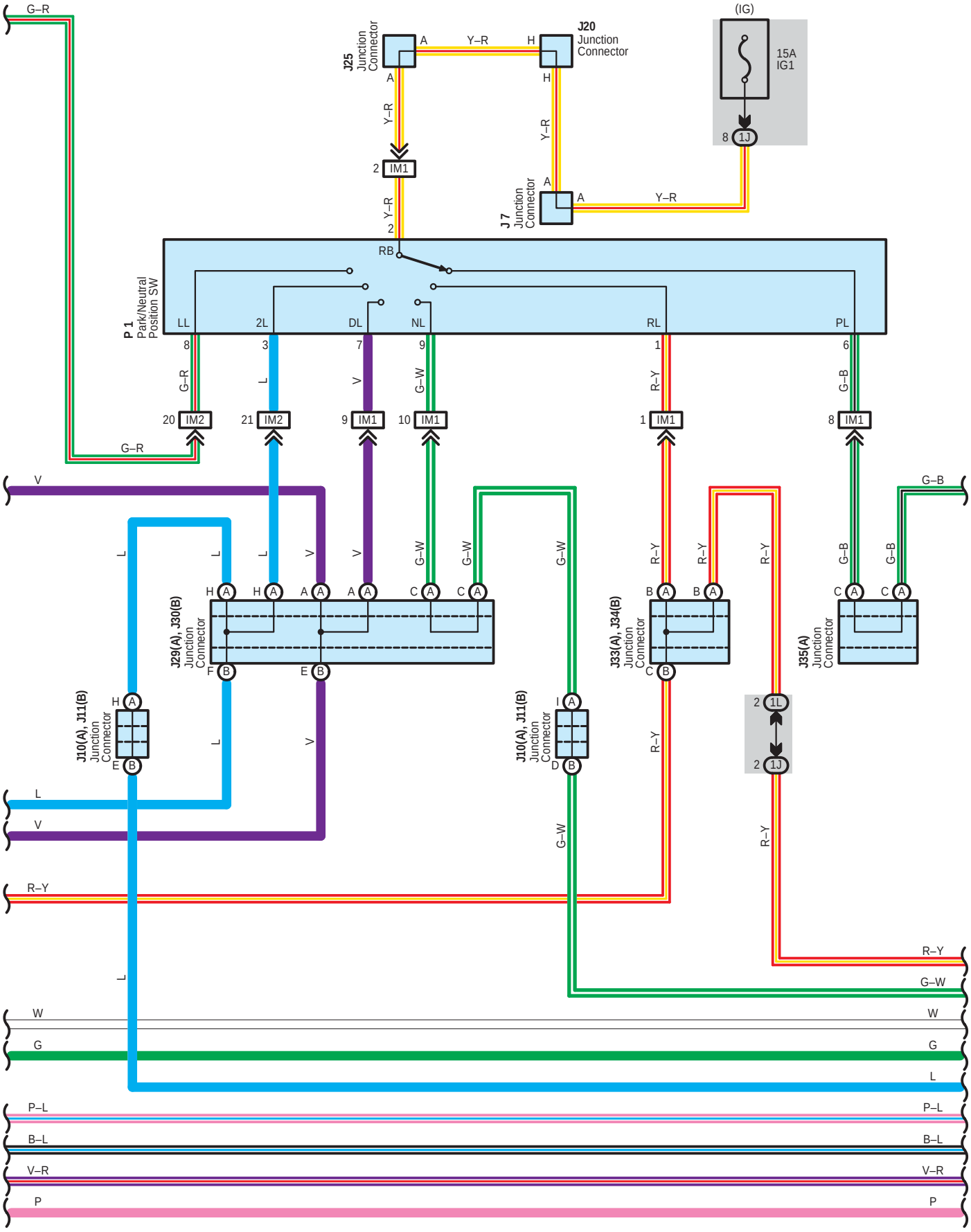

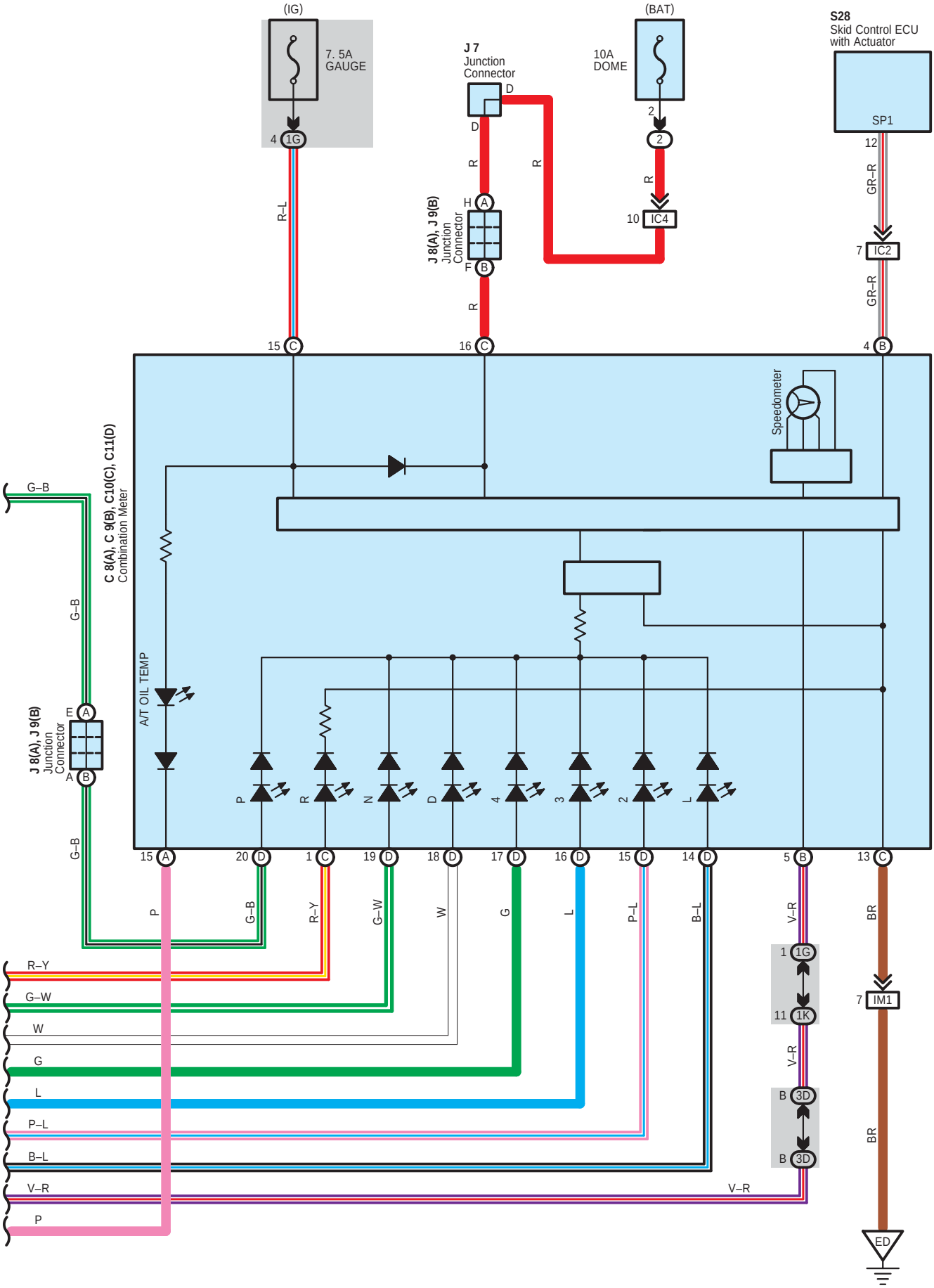
(IG)
7. 5A
GAUGE
4 1G
R–L
15 C
J 7
Junction
Connector
D
D
R
H A
J 8(A), J 9(B)
Junction
Connector
F B
R
16 C
R
(BAT)
10A
DOME
2
2
R
10 IC4
S28
Skid Control ECU
with Actuator
SP1
12
GR–R
7 IC2
GR–R
4 B
Speedometer
C 8(A), C 9(B), C10(C), C11(D)
Combination Meter
A/T OIL TEMP
P
R
N
D
4
3
2
L
G–B
G–B
J 8(A), J 9(B)
Junction
Connector
E A
A B
G–B
15 A
20 D
1 C
19 D
18 D
17 D
16 D
15 D
14 D
5 B
13 C
P
G–B
R–Y
G–W
W
G
L
P–L
B–L
V–R
BR
1 1G
11 1K
V–R
B 3D
B 3D
7 IM1
BR
ED
R–Y
G–W
W
G
L
P–L
B–L
V–R
V–R
P

System Outline

Previous automatic transmissions have selected each gear shift using mechanically controlled throttle hydraulic pressure, governor hydraulic pressure and lock–up hydraulic pressure. The electronically controlled transmission, however, electrically controls the line pressure, throttle pressure, lock–up pressure and accumulator pressure etc. through the solenoid valve. The electronically controlled transmission is a system which precisely controls gear shift timing and lock–up timing in response to the vehicle's driving conditions and the engine condition detected by various sensors. It makes smooth driving possible by shift selection for each gear which is the most appropriate to the driving conditions at that time, and by preventing downing, squat and gear shift shock when starting off.

1. Gear Shift Operation

When driving, the engine warm up condition is input as a signal to TERMINAL THW of the engine control module from the engine coolant temp. sensor and the vehicle speed signal from vehicle speed sensor is input to TERMINAL SP2+ of the engine control module. At the same time, the throttle valve opening signal from the throttle position sensor is input to TERMINALS VTA1 and VTA2 of the engine control module as throttle angle signal.
Based on these signals, the engine control module selects the best shift position for the driving conditions and sends current to the electronically controlled transmission solenoid.

2. Line Hydraulic Pressure Control

The engine control module adjusts the line hydraulic pressure to the optimal level by controlling TERMINAL SLT+ of the module according to the engine torque data. This realizes the smooth gear shifting.

3. High Response Gear Shifting Control

The engine control module performs the high response engine torque up control to control the ignition–timing lag as well as opening the electronic throttle when shifting down. By doing this, the gear shifting is performed in a short period of time. Moreover, the engine control module uses the orifice switching control, which optimizes the speed of applying and reducing the hydraulic pressure. And it realizes the fine shifting condition by applying and reducing hydraulic pressure slowly when the gear shifting shock is important and quickly when the high response is required.

4. Clutch Hydraulic Pressure Control

The engine control module controls the clutch operation in the optimal timing and with the best hydraulic pressure according to the engine torque data and the number of the clutch revolution

5. Lock–Up and Flexible Lock–Up Control

The engine control module carries out the lock–up control by controlling the TERMINAL SLU+ of the module according to the shift position, vehicle speed, throttle opening degree and running conditions. The engine control module also steadily keeps applying the lock–up clutch a delicate slippage to improve the transmission efficiency (Fuel efficiency) of the torque converter.

6. Stop Light SW Circuit

If the brake pedal is depressed (Stop light SW on) when driving in lock–up condition, a signal is input to TERMINAL STP of the engine control module. The engine control module operates and cuts the current to the solenoid to release lock–up.

7. AI–Shift Control

The engine control module judges whether the road is downslope or upslope by detecting the throttle opening degree or the vehicle's speed. Moreover it can expect the winding roads by detecting the turning condition of the vehicle. The engine control module keeps unnecessary shifting up from the fourth gear from operating and carries out the automatic shifting down to the third gear in order to control the vehicle running according to the road conditions. The engine control module also reads the driver's intention during driving from his (her) accelerating operation and the running conditions of the vehicle. As a result of that, ideal shifting patters for each driver are automatically selected without any switching operations.

: Parts Location

Code	See Page	Code	See Page	Code	See Page
A24	36	J4	38	J34 B	38
C8 A	37	J7	38	J35 A	38
C9 B	37	J8 A	38	J36 B	38
C10 C	37	J9 B	38	J37	38
C11 D	37	J10 A	38	J50 D	38
D1	37	J11 B	38	J51 E	38
E1	32 (2UZ–FE)	J18	38	J52 F	38
E2	32 (2UZ–FE)	J20	38	M1 B	33 (2UZ–FE)
E4 A	37	J25	38	P1	33 (2UZ–FE)
E5 B	37	J28	38	S6	39
E6 C	37	J29 A	38	S12	39
E7 D	37	J30 B	38	S28	33 (2UZ–FE)
E8 E	37	J31 A	38	T2	33 (2UZ–FE)
J2 A	33 (2UZ–FE)	J32 B	38	T4	33 (2UZ–FE)
J3 B	33 (2UZ–FE)	J33 A	38	V11	33 (2UZ–FE)

: Relay Blocks

Code	See Page	Relay Blocks (Relay Block Location)
2	22	Engine Room R/B (Engine Compartment Left)

: Junction Block and Wire Harness Connector

Code	See Page	Junction Block and Wire Harness (Connector Location)
1G	25	Instrument Panel Wire and Driver Side J/B (Lower Finish Panel)
1J		
1K		
1L		
3C	28	Instrument Panel Wire and Center J/B (Instrument Panel Brace RH)
3D		
3E		

: Connector Joining Wire Harness and Wire Harness

Code	See Page	Joining Wire Harness and Wire Harness (Connector Location)
IC2	46	Instrument Panel Wire and Engine Room Main Wire (Left Kick Panel)
IC3		
IC4		
IM1	47	Engine Wire and Instrument Panel Wire (Right Side of Blower Unit)
IM2		

: Ground Points

Code	See Page	Ground Points Location
EB	44 (2UZ–FE)	Front Left Fender
ED	44 (2UZ–FE)	Left Bank Cylinder Head
EE	44 (2UZ–FE)	Rear Side of Cylinder Block
IH	46	Instrument Panel Brace LH
IK	46	Right Kick Panel

ECT and A/T Indicator for 1GR–FE

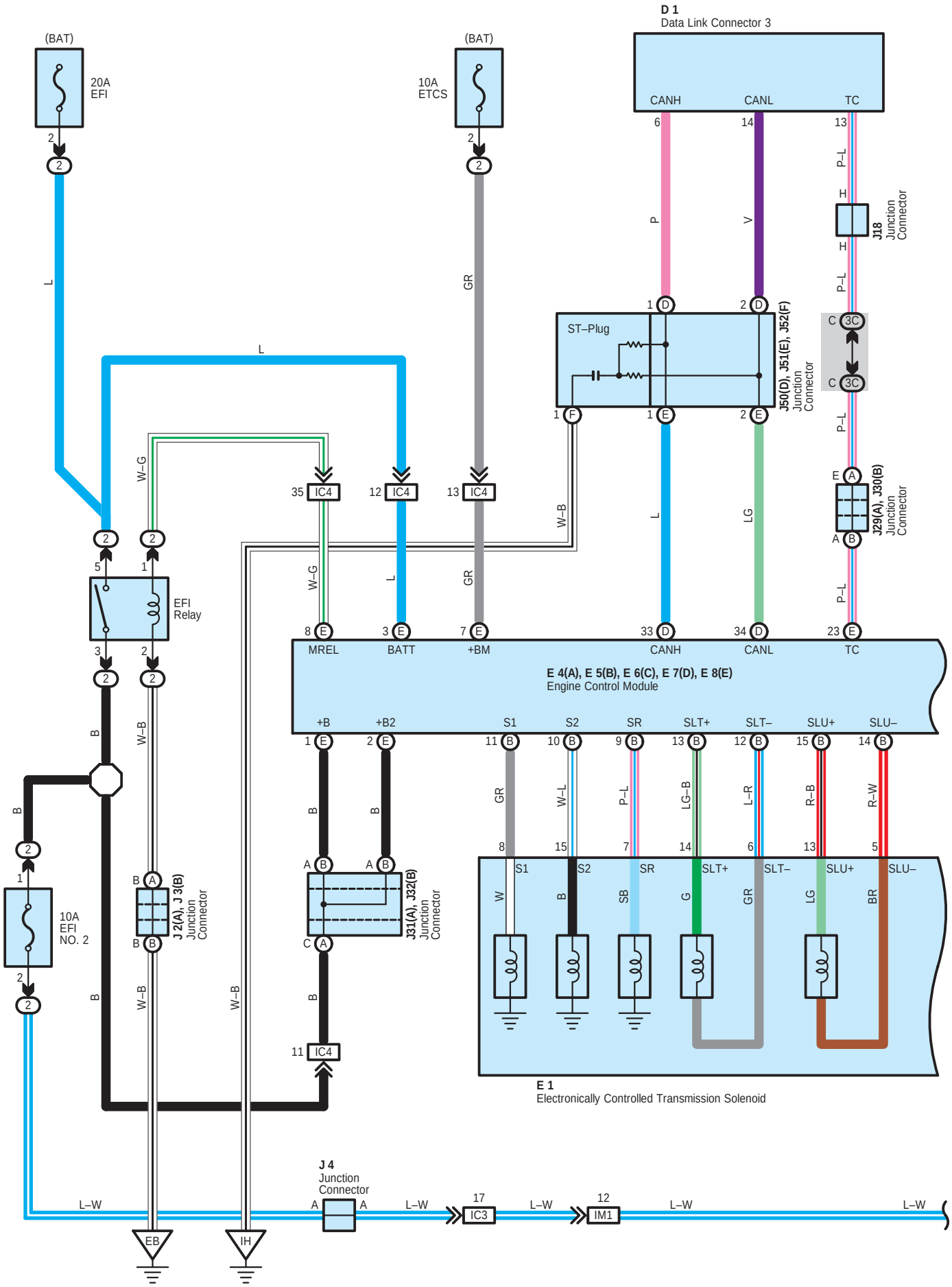

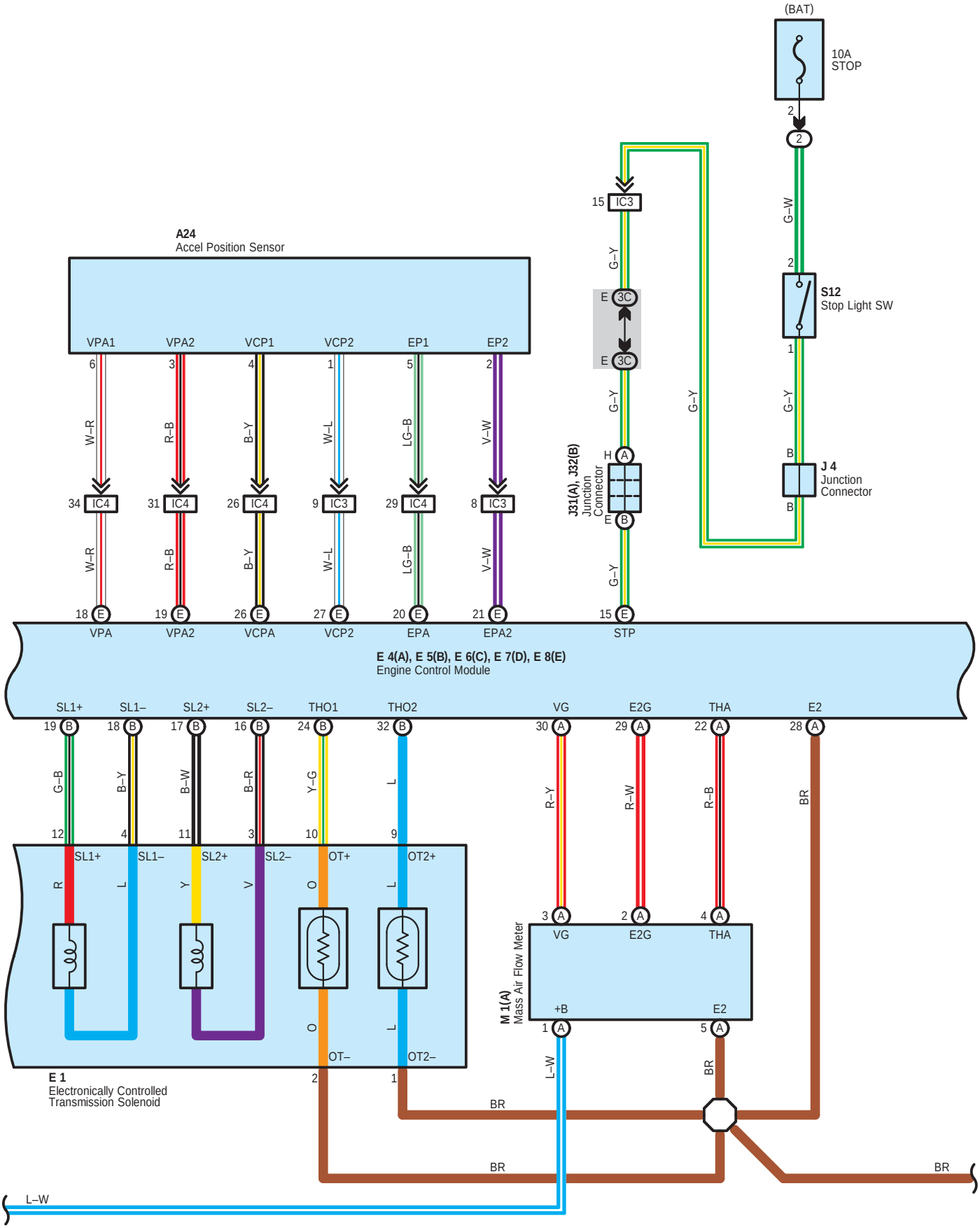
(BAT)
10A
STOP
2
2
G–W
2
S12
Stop Light SW
1
G–Y
B
J 4
Junction
Connector
B
15 IC3
G–Y
E 3C
E 3C
G–Y
H A
J31(A), J32(B)
Junction
Connector
E B
G–Y
15 E
G–Y
A24
Accel Position Sensor
VPA1 VPA2 VCP1 VCP2 EP1 EP2
6 3 4 1 5 2
W–R R–B B–Y W–L LG–B V–W
34 IC4 31 IC4 26 IC4 9 IC3 29 IC4 8 IC3
W–R R–B B–Y W–L LG–B V–W
18 E 19 E 26 E 27 E 20 E 21 E
VPA VPA2 VCPA VCP2 EPA EPA2 STP
E 4(A), E 5(B), E 6(C), E 7(D), E 8(E)
Engine Control Module
SL1+ SL1– SL2+ SL2– THO1 THO2 VG E2G THA E2
19 B 18 B 17 B 16 B 24 B 32 B 30 A 29 A 22 A 28 A
G–B B–Y B–W B–R Y–G L R–Y R–W R–B BR
12 4 11 3 10 9 3 2 4
SL1+ SL1– SL2+ SL2– OT+ OT2+
R L Y V O L
O L
OT– OT2–
2 1
E 1
Electronically Controlled
Transmission Solenoid
M 1(A)
Mass Air Flow Meter
VG E2G THA
+B E2
1 A 5 A
L–W BR
BR
BR
BR
L–W

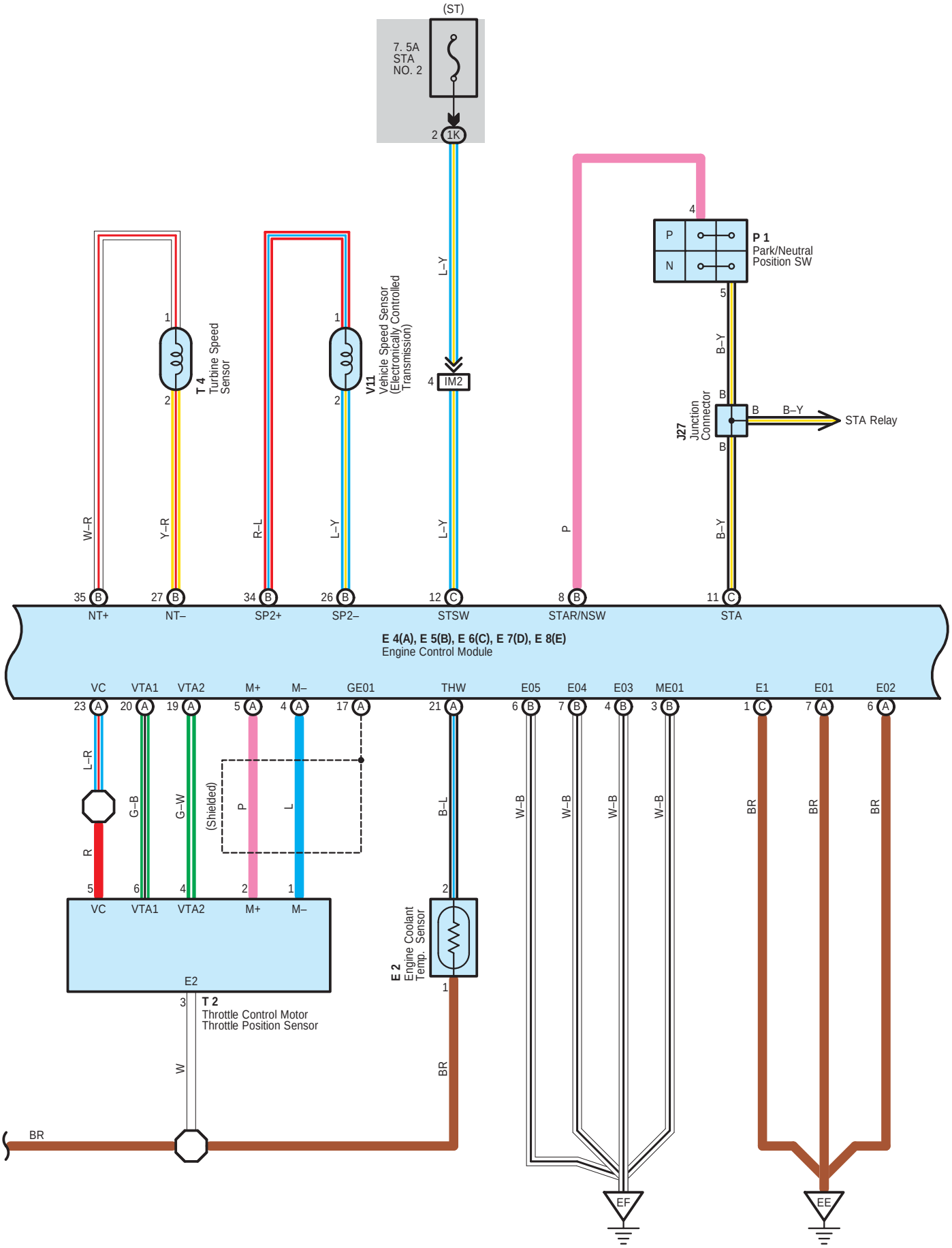
(ST)
7. 5A
STA
NO. 2
2
1K
4
IM2
L–Y
P 1
Park/Neutral
Position SW
P
N
4
5
B–Y
B
B
B–Y
STA Relay
J27
Junction
Connector
B
T 4
Turbine Speed
Sensor
V11
Vehicle Speed Sensor
(Electronically Controlled
Transmission)
W–R
Y–R
R–L
L–Y
L–Y
P
B–Y
35 B NT+
27 B NT–
34 B SP2+
26 B SP2–
12 C STSW
8 B STAR/NSW
11 C STA
E 4(A), E 5(B), E 6(C), E 7(D), E 8(E)
Engine Control Module
VC
VTA1
VTA2
M+
M–
GE01
THW
E05
E04
E03
ME01
E1
E01
E02
23 A
20 A
19 A
5 A
4 A
17 A
21 A
6 B
7 B
4 B
3 B
1 C
7 A
6 A
L–R
G–B
G–W
(Shielded)
P
L
B–L
W–B
W–B
W–B
W–B
BR
BR
BR
R
5
6
4
2
1
2
VC
VTA1
VTA2
M+
M–
E2
E 2
Engine Coolant
Temp. Sensor
1
3
T 2
Throttle Control Motor
Throttle Position Sensor
W
BR
BR
EF
EE

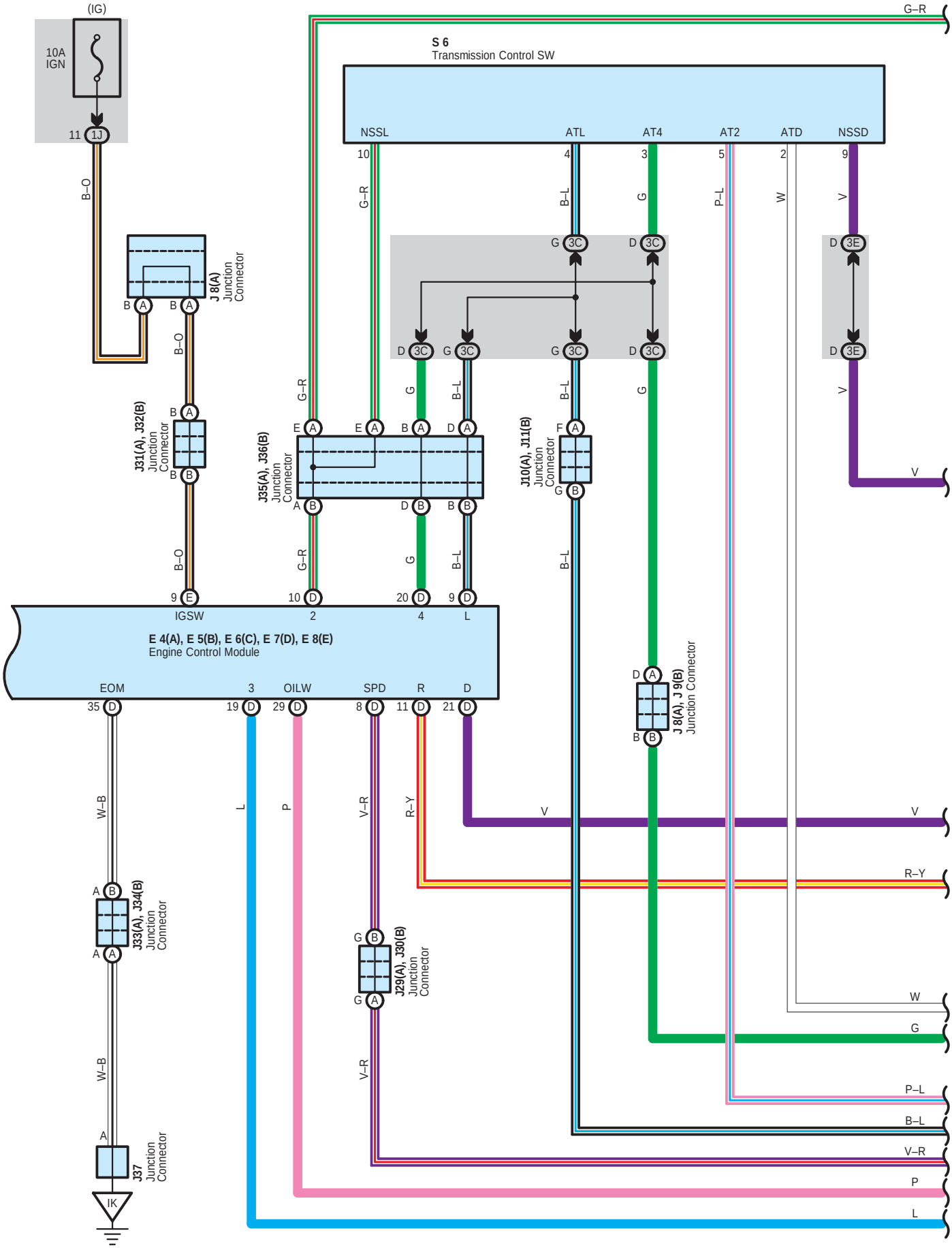
(IG)
10A
IGN
11
1J
B–O
G–R
S 6
Transmission Control SW
NSSL
ATL
AT4
AT2
ATD
NSSD
10
4
3
5
2
9
G–R
B–L
G
P–L
W
V
G 3C
D 3C
D 3E
J 8(A)
Junction
Connector
B A
B A
B–O
J31(A), J32(B)
Junction
Connector
B A
B B
B–O
9 E
IGSW
J35(A), J36(B)
Junction
Connector
E A
E A
B A
D A
G–R
G
B–L
A B
D B
B B
G–R
G
B–L
10 D
20 D
9 D
2
4
L
J10(A), J11(B)
Junction
Connector
F A
G B
B–L
G
V
E 4(A), E 5(B), E 6(C), E 7(D), E 8(E)
Engine Control Module
EOM
3
OILW
SPD
R
D
35 D
19 D
29 D
8 D
11 D
21 D
D A
B B
J8(A), J9(B)
Junction Connector
W–B
L
P
V–R
R–Y
V
V
R–Y
A B
A A
J33(A), J34(B)
Junction
Connector
G B
G A
J29(A), J30(B)
Junction
Connector
W
G
W–B
P–L
B–L
V–R
A
J37
Junction
Connector
IK
P
L

ECT and A/T Indicator for 1GR–FE

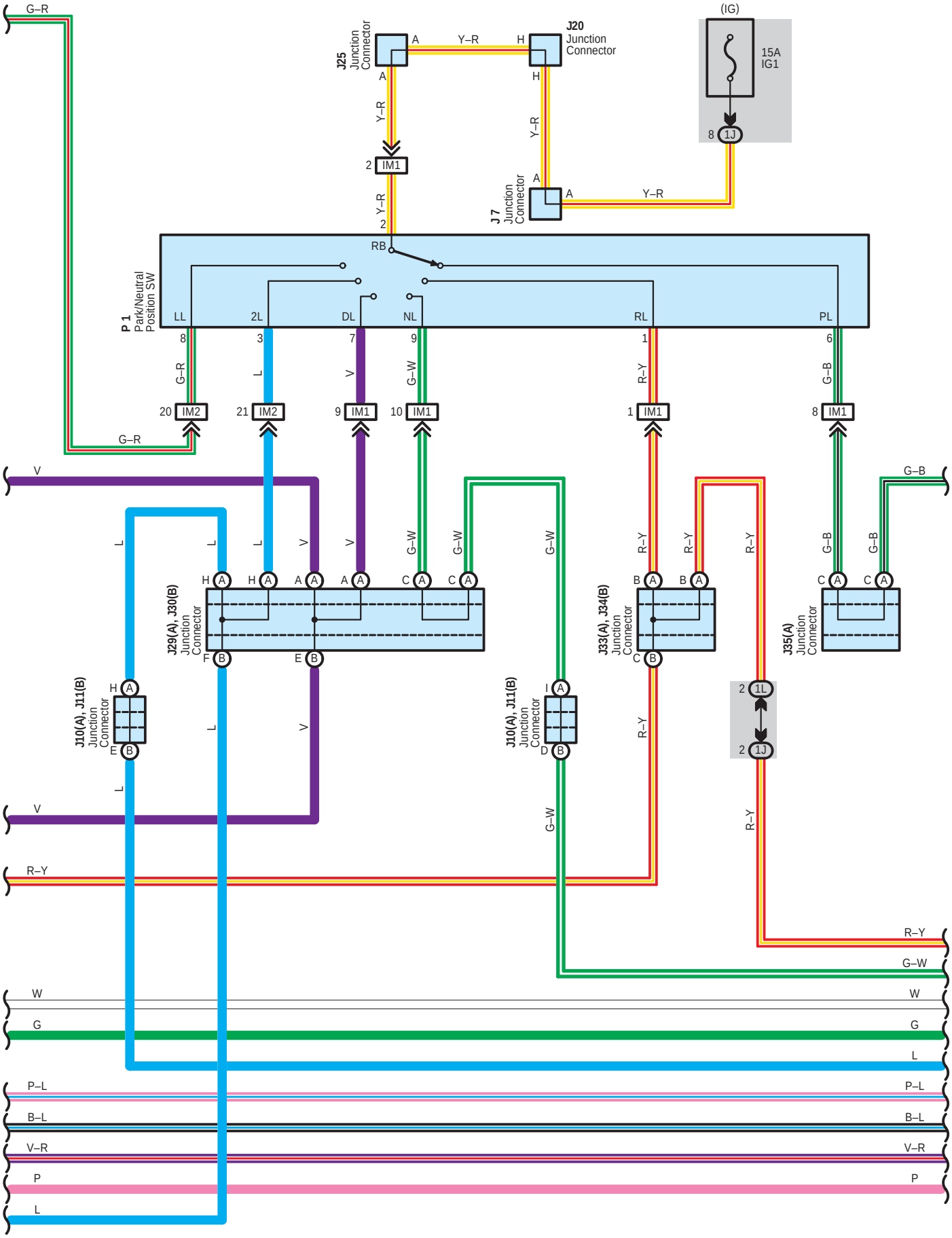

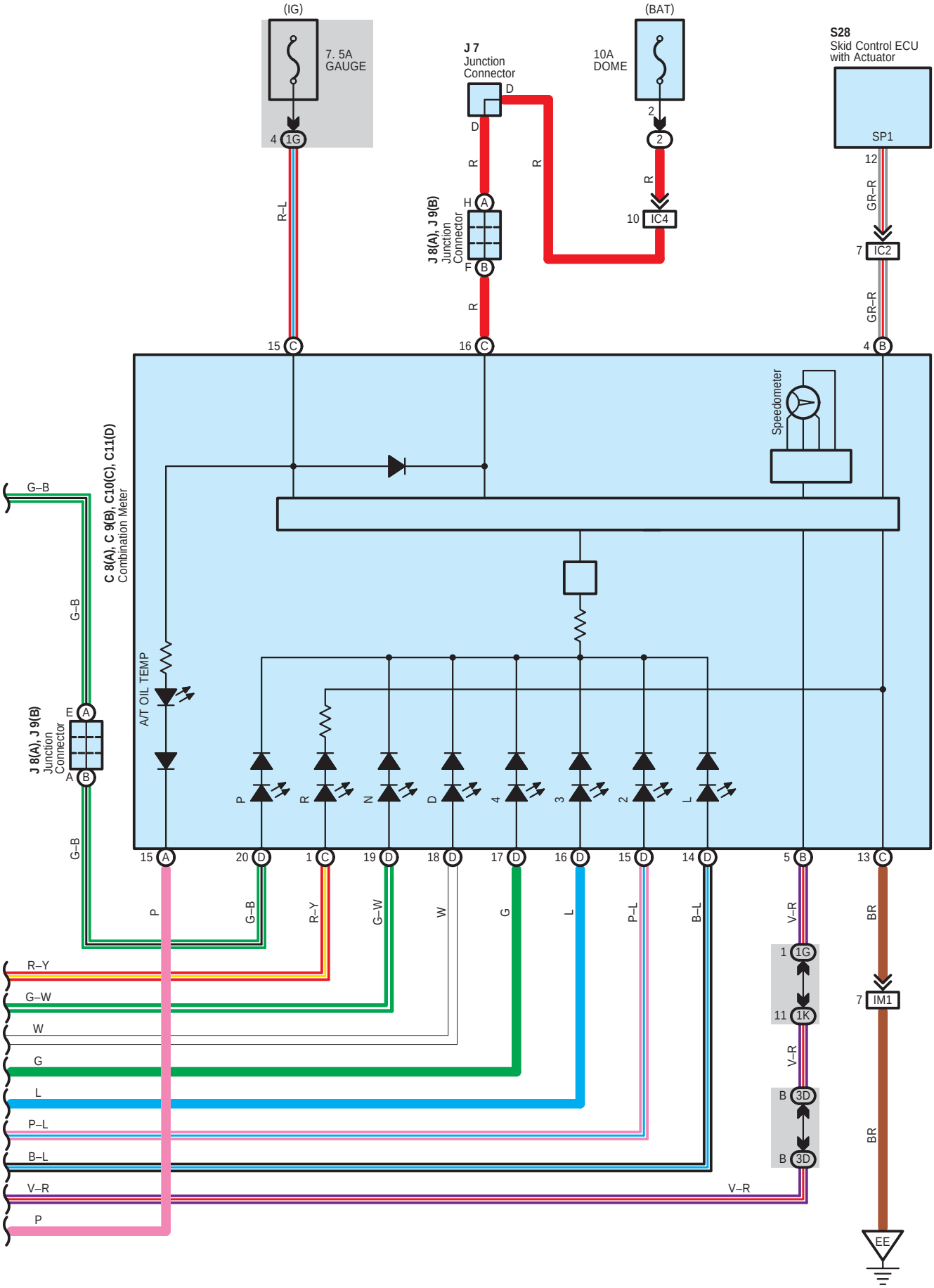
(IG)
7. 5A
GAUGE
4 1G
R–L
15 C
J 7
Junction
Connector
D
D
R
H A
J 8(A), J 9(B)
Junction
Connector
F B
R
16 C
R
(BAT)
10A
DOME
2
2
R
10 IC4
S28
Skid Control ECU
with Actuator
SP1
12
GR–R
7 IC2
GR–R
4 B
Speedometer
C 8(A), C 9(B), C10(C), C11(D)
Combination Meter
A/T OIL TEMP
P
R
N
D
4
3
2
L
G–B
G–B
J 8(A), J 9(B)
Junction
Connector
E A
A B
G–B
15 A
20 D
1 C
19 D
18 D
17 D
16 D
15 D
14 D
5 B
13 C
P
G–B
R–Y
G–W
W
G
L
P–L
B–L
V–R
BR
1 1G
11 1K
V–R
B 3D
B 3D
BR
7 IM1
EE
R–Y
G–W
W
G
L
P–L
B–L
V–R
V–R
P

System Outline

Previous automatic transmissions have selected each gear shift using mechanically controlled throttle hydraulic pressure, governor hydraulic pressure and lock–up hydraulic pressure. The electronically controlled transmission, however, electrically controls the line pressure, throttle pressure, lock–up pressure and accumulator pressure etc. through the solenoid valve. The electronically controlled transmission is a system which precisely controls gear shift timing and lock–up timing in response to the vehicle's driving conditions and the engine condition detected by various sensors. It makes smooth driving possible by shift selection for each gear which is the most appropriate to the driving conditions at that time, and by preventing downing, squat and gear shift shock when starting off.

1. Gear Shift Operation

When driving, the engine warm up condition is input as a signal to TERMINAL THW of the engine control module from the engine coolant temp. sensor and the vehicle speed signal from vehicle speed sensor is input to TERMINAL SP2+ of the engine control module. At the same time, the throttle valve opening signal from the throttle position sensor is input to TERMINALS VTA1 and VTA2 of the engine control module as throttle angle signal.
Based on these signals, the engine control module selects the best shift position for the driving conditions and sends current to the electronically controlled transmission solenoid.

2. Line Hydraulic Pressure Control

The engine control module adjusts the line hydraulic pressure to the optimal level by controlling TERMINAL SLT+ of the module according to the engine torque data. This realizes the smooth gear shifting.

3. High Response Gear Shifting Control

The engine control module performs the high response engine torque up control to control the ignition–timing lag as well as opening the electronic throttle when shifting down. By doing this, the gear shifting is performed in a short period of time. Moreover, the engine control module uses the orifice switching control, which optimizes the speed of applying and reducing the hydraulic pressure. And it realizes the fine shifting condition by applying and reducing hydraulic pressure slowly when the gear shifting shock is important and quickly when the high response is required.

4. Clutch Hydraulic Pressure Control

The engine control module controls the clutch operation in the optimal timing and with the best hydraulic pressure according to the engine torque data and the number of the clutch revolution

5. Lock–Up and Flexible Lock–Up Control

The engine control module carries out the lock–up control by controlling the TERMINAL SLU+ of the module according to the shift position, vehicle speed, throttle opening degree and running conditions. The engine control module also steadily keeps applying the lock–up clutch a delicate slippage to improve the transmission efficiency (Fuel efficiency) of the torque converter.

6. Stop Light SW Circuit

If the brake pedal is depressed (Stop light SW on) when driving in lock–up condition, a signal is input to TERMINAL STP of the engine control module. The engine control module operates and cuts the current to the solenoid to release lock–up.

7. AI–Shift Control

The engine control module judges whether the road is downslope or upslope by detecting the throttle opening degree or the vehicle's speed. Moreover it can expect the winding roads by detecting the turning condition of the vehicle. The engine control module keeps unnecessary shifting up from the fourth gear from operating and carries out the automatic shifting down to the third gear in order to control the vehicle running according to the road conditions. The engine control module also reads the driver's intention during driving from his (her) accelerating operation and the running conditions of the vehicle. As a result of that, ideal shifting patters for each driver are automatically selected without any switching operations.

: Parts Location

Code	See Page	Code	See Page	Code	See Page
A24	36	J4	38	J34 B	38
C8 A	37	J7	38	J35 A	38
C9 B	37	J8 A	38	J36 B	38
C10 C	37	J9 B	38	J37	38
C11 D	37	J10 A	38	J50 D	38
D1	37	J11 B	38	J51 E	38
E1	34 (1GR–FE)	J18	38	J52 F	38
E2	34 (1GR–FE)	J20	38	M1 A	35 (1GR–FE)
E4 A	37	J25	38	P1	35 (1GR–FE)
E5 B	37	J27	38	S6	39
E6 C	37	J29 A	38	S12	39
E7 D	37	J30 B	38	S28	35 (1GR–FE)
E8 E	37	J31 A	38	T2	35 (1GR–FE)
J2 A	35 (1GR–FE)	J32 B	38	T4	35 (1GR–FE)
J3 B	35 (1GR–FE)	J33 A	38	V11	35 (1GR–FE)

: Relay Blocks

Code	See Page	Relay Blocks (Relay Block Location)
2	22	Engine Room R/B (Engine Compartment Left)

: Junction Block and Wire Harness Connector

Code	See Page	Junction Block and Wire Harness (Connector Location)
1G	25	Instrument Panel Wire and Driver Side J/B (Lower Finish Panel)
1J		
1K		
1L		
3C	28	Instrument Panel Wire and Center J/B (Instrument Panel Brace RH)
3D		
3E		

: Connector Joining Wire Harness and Wire Harness

Code	See Page	Joining Wire Harness and Wire Harness (Connector Location)
IC2	46	Instrument Panel Wire and Engine Room Main Wire (Left Kick Panel)
IC3		
IC4		
IM1	47	Engine Wire and Instrument Panel Wire (Right Side of Blower Unit)
IM2		

: Ground Points

Code	See Page	Ground Points Location
EB	45 (1GR–FE)	Front Left Fender
EE	45 (1GR–FE)	Rear Side of Right Bank Cylinder Block
EF	45 (1GR–FE)	Rear Side of Left Bank Cylinder Block
IH	46	Instrument Panel Brace LH
IK	46	Right Kick Panel

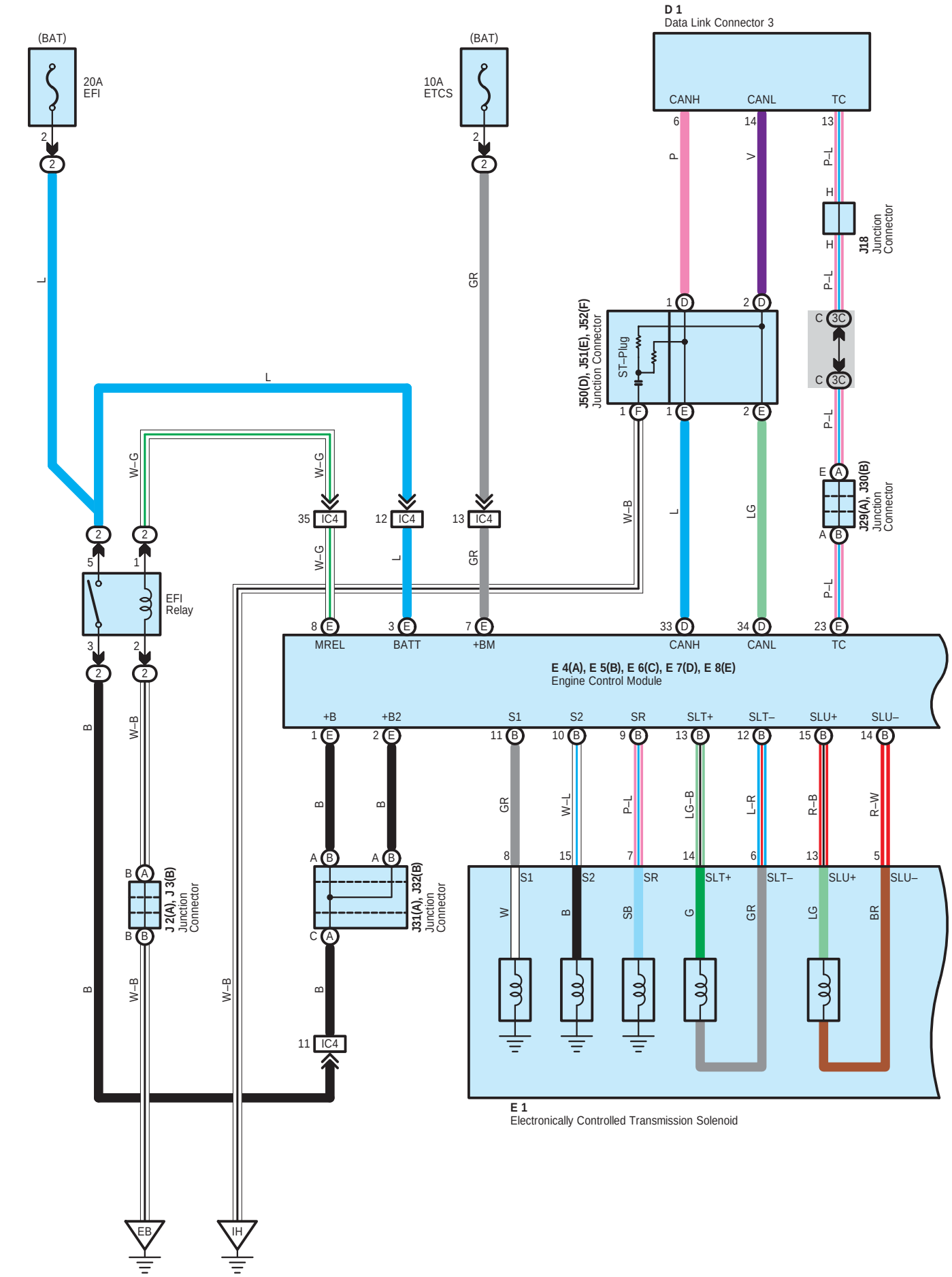
D 1
Data Link Connector 3
CANH
CANL
TC
(BAT)
20A
EFI
10A
ETCS
J18
Junction
Connector
J50(D), J51(E), J52(F)
Junction Connector
ST–Plug
J29(A), J30(B)
Junction
Connector
EFI
Relay
IC4
MREL
BATT
+BM
E 4(A), E 5(B), E 6(C), E 7(D), E 8(E)
Engine Control Module
+B
+B2
S1
S2
SR
SLT+
SLT–
SLU+
SLU–
J2(A), J3(B)
Junction
Connector
J31(A), J32(B)
Junction
Connector
E 1
Electronically Controlled Transmission Solenoid
EB
IH

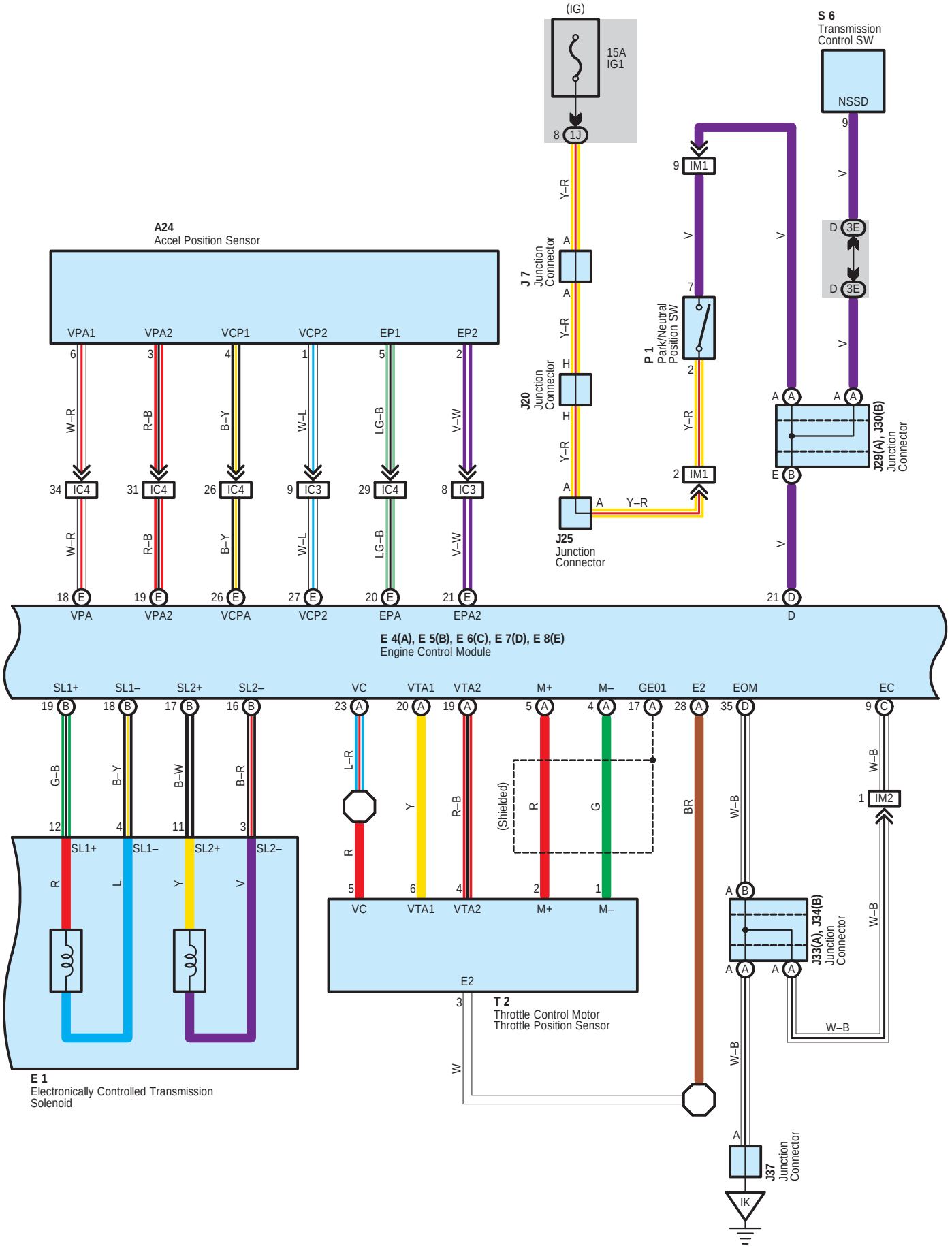
(IG)
15A
IG1
8 1J
S 6
Transmission
Control SW
NSSD
9
V
D 3E
D 3E
V
9 IM1
V
V
7
2
Y–R
2 IM1
A24
Accel Position Sensor
VPA1
VPA2
VCP1
VCP2
EP1
EP2
6
3
4
1
5
2
W–R
R–B
B–Y
W–L
LG–B
V–W
34 IC4
31 IC4
26 IC4
9 IC3
29 IC4
8 IC3
W–R
R–B
B–Y
W–L
LG–B
V–W
18 E
19 E
26 E
27 E
20 E
21 E
VPA
VPA2
VCPA
VCP2
EPA
EPA2
J 7
Junction
Connector
A
A
Y–R
H
J20
Junction
Connector
H
Y–R
A
A
Y–R
J25
Junction
Connector
P 1
Park/Neutral
Position SW
A A
A A
J29(A), J30(B)
Junction
Connector
E B
V
21 D
D
E 4(A), E 5(B), E 6(C), E 7(D), E 8(E)
Engine Control Module
SL1+
SL1–
SL2+
SL2–
VC
VTA1
VTA2
M+
M–
GE01
E2
EOM
EC
19 B
18 B
17 B
16 B
23 A
20 A
19 A
5 A
4 A
17 A
28 A
35 D
9 C
G–B
B–Y
B–W
B–R
L–R
Y
R–B
(Shielded)
R
G
BR
W–B
12
4
11
3
R
Y
1 IM2
SL1+
SL1–
SL2+
SL2–
R
L
Y
V
5
6
4
2
1
VC
VTA1
VTA2
M+
M–
E2
A B
J33(A), J34(B)
Junction
Connector
A A
A A
W–B
W–B
W–B
3
W
T 2
Throttle Control Motor
Throttle Position Sensor
A
J37
Junction
Connector
IK
E 1
Electronically Controlled Transmission
Solenoid

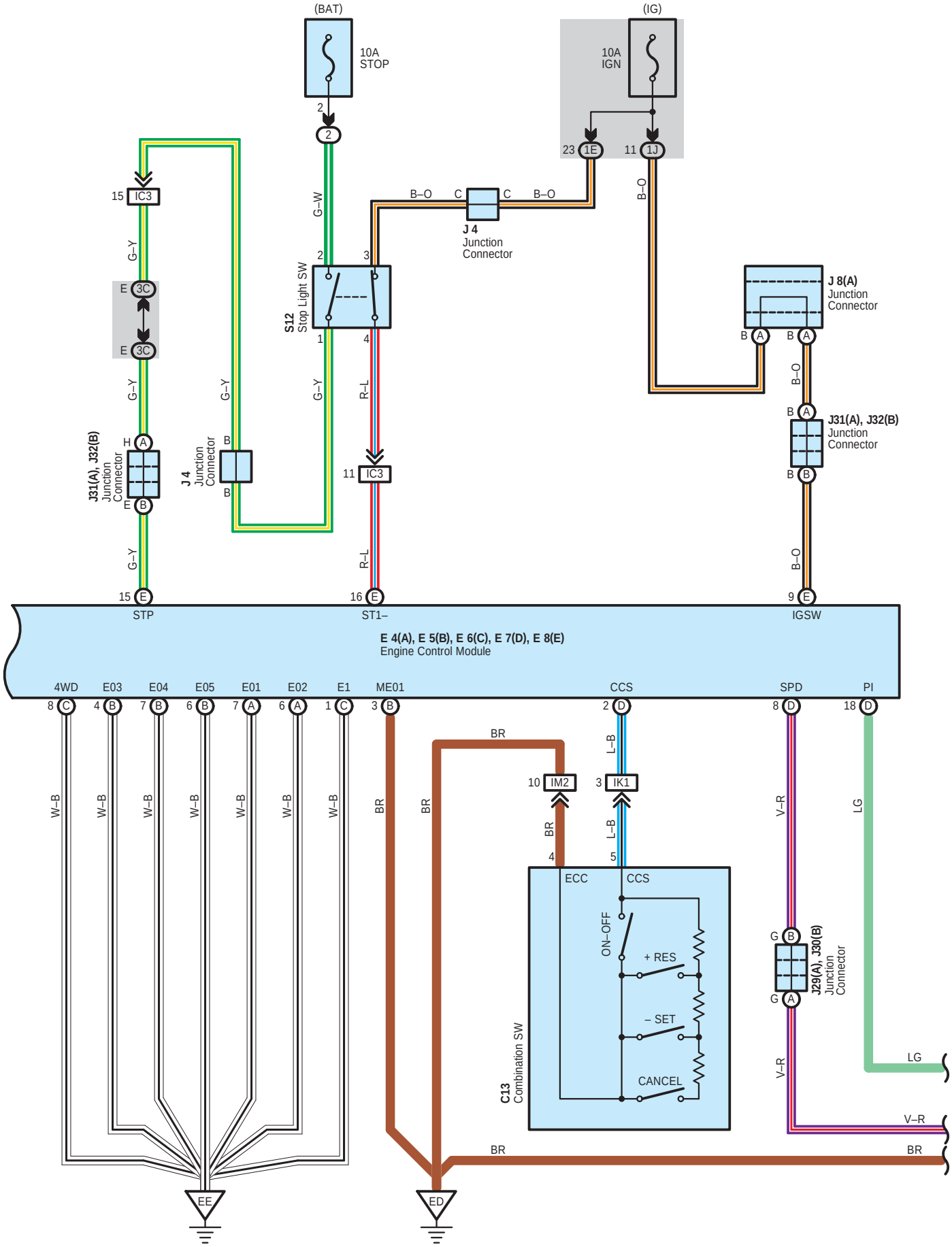
(BAT)
10A
STOP
(IG)
10A
IGN
23 1E
11 1J
15 IC3
G–Y
E 3C
E 3C
G–Y
G–Y
G–Y
G–W
2
3
B–O
C
C
B–O
J 4
Junction
Connector
B–O
S12
Stop Light SW
1
4
R–L
J 8(A)
Junction
Connector
B A
B A
B–O
B A
J31(A), J32(B)
Junction
Connector
B B
H A
E B
J31(A), J32(B)
Junction
Connector
J 4
Junction
Connector
B
B
11 IC3
R–L
B–O
15 E
16 E
9 E
STP
ST1–
IGSW
E 4(A), E 5(B), E 6(C), E 7(D), E 8(E)
Engine Control Module
4WD
E03
E04
E05
E01
E02
E1
ME01
CCS
SPD
PI
8 C
4 B
7 B
6 B
7 A
6 A
1 C
3 B
2 D
8 D
18 D
W–B
BR
BR
L–B
V–R
LG
10 IM2
3 IK1
BR
L–B
4
5
ECC
CCS
ON–OFF
+ RES
– SET
CANCEL
C13
Combination SW
G B
G A
J29(A), J30(B)
Junction
Connector
V–R
LG
V–R
BR
BR
EE
ED

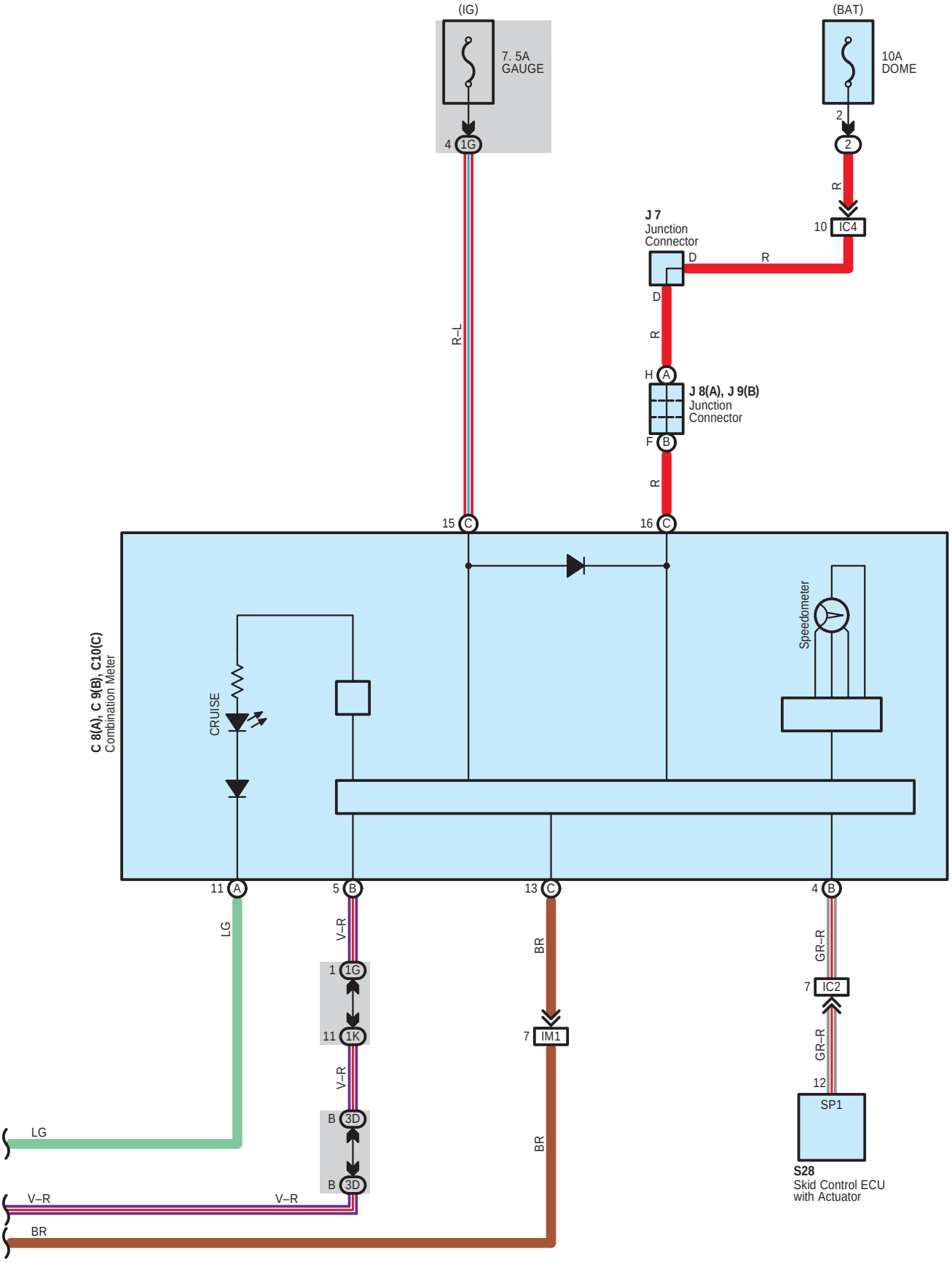
(IG)
7. 5A
GAUGE
4 1G
(BAT)
10A
DOME
2
2
R
10 IC4
J 7
Junction
Connector
D
R
D
R
H A
J 8(A), J 9(B)
Junction
Connector
F B
R
R–L
15 C
16 C
C 8(A), C 9(B), C10(C)
Combination Meter
CRUISE
Speedometer
11 A
5 B
13 C
4 B
LG
V–R
BR
GR–R
1 1G
11 1K
7 IM1
7 IC2
V–R
GR–R
B 3D
B 3D
12
SP1
S28
Skid Control ECU
with Actuator
LG
V–R
V–R
BR

System Outline

The cruise control system is a constant vehicle speed controller in which control of the switch on the instrument panel makes it possible to automatically adjust the opening of the engine throttle valve without depressing of the accel pedal.

1. Set Operation

When the ON–OFF SW is turned on, the system starts preparations necessary for the cruise control and turns on the indicator light in the combination meter.

2. Set Speed Control

When the – SET SW is operated with the cruise control main SW turned on during travelling, the constant vehicle speed is controlled.

3. Coast Control

When the – SET SW is kept turned on during cruise control travelling, the engine control module controls the throttle valve to decelerate the vehicle. Every time the – SET SW is turned on instantaneously, the vehicle speed is decelerated approximately 1.5 km/h.

4. Accel Control

When the + RES SW is kept turned on during cruise control travelling, the engine control module controls the throttle valve to accelerate the vehicle. Every time the + RES SW is turned on instantaneously, the vehicle speed is accelerated approximately 1.5 km/h.

5. Resume Control

When the vehicle speed is above the low speed limit (Approximately 40 km/h, 25 mph) if the cruise control is cancelled, use of the + RES SW accelerates the vehicle to the speed level used before canceling the cruise control.

6. Manual Cancel Mechanism

If any of the following signals is input during cruise control travelling, the cruise control is cancelled.

* The stop light SW is turned on.
* The CANCEL SW is turned on.
* The ON–OFF SW is turned off.
* Gear is shifted from D position to other positions than D.

7. Auto Cancel Operation

* If any of the following conditions are detected, the set speed is erased and the control is canceled.

(1) Disconnection and/or short in the stop light SW

(2) Malfunction in the vehicle speed signal

(3) Malfunction in the electronic throttle parts

(4) Malfunction in the stop light SW input circuit

(5) Malfunction in the cancel circuit

(6) The actual vehicle speed becomes –16 km/h slower than the set speed

* If the following condition is detected, the set speed is kept and the control is canceled.

(1) The actual vehicle speed becomes slower than the minimum speed limit.

8. Overdrive Control Function

Overdrive is sometimes cut off on gradients during cruise control driving. When end of climbing gradient is determined by throttle opening degree information after overdrive is canceled, control is reset to overdrive condition after overdrive resetting timer operation. Also, when overdrive is cut off during accelerator resuming control, control is reset to overdrive condition when accelerator resuming control is finished.

: Parts Location

Code		See Page	Code		See Page	Code		See Page
A24		36	J2	A	33 (2UZ–FE)	J32	B	38
C8	A	37	J3	B	33 (2UZ–FE)	J33	A	38
C9	B	37	J4		38	J34	B	38
C10	C	37	J7		38	J37		38
C13		37	J8	A	38	J50	D	38
D1		37	J9	B	38	J51	E	38
E1		32 (2UZ–FE)	J18		38	J52	F	38
E4	A	37	J20		38	P1		33 (2UZ–FE)
E5	B	37	J25		38	S6		39
E6	C	37	J29	A	38	S12		39
E7	D	37	J30	B	38	S28		33 (2UZ–FE)
E8	E	37	J31	A	38	T2		33 (2UZ–FE)

: Relay Blocks

Code	See Page	Relay Blocks (Relay Block Location)
2	22	Engine Room R/B (Engine Compartment Left)

: Junction Block and Wire Harness Connector

Code	See Page	Junction Block and Wire Harness (Connector Location)
1E	24	Engine Room Main Wire and Driver Side J/B (Lower Finish Panel)
1G	25	Instrument Panel Wire and Driver Side J/B (Lower Finish Panel)
1J		
1K		
3C	28	Instrument Panel Wire and Center J/B (Instrument Panel Brace RH)
3D		
3E		

: Connector Joining Wire Harness and Wire Harness

Code	See Page	Joining Wire Harness and Wire Harness (Connector Location)
IC2	46	Instrument Panel Wire and Engine Room Main Wire (Left Kick Panel)
IC3		
IC4		
IK1	47	Instrument Panel Wire and Instrument Panel Wire (Left Upper Side of the Glove Box)
IM1	47	Engine Wire and Instrument Panel Wire (Right Side of Blower Unit)
IM2		

: Ground Points

Code	See Page	Ground Points Location
EB	44 (2UZ–FE)	Front Left Fender
ED	44 (2UZ–FE)	Left Bank Cylinder Head
EE	44 (2UZ–FE)	Rear Side of Cylinder Block
IH	46	Instrument Panel Brace LH
IK	46	Right Kick Panel

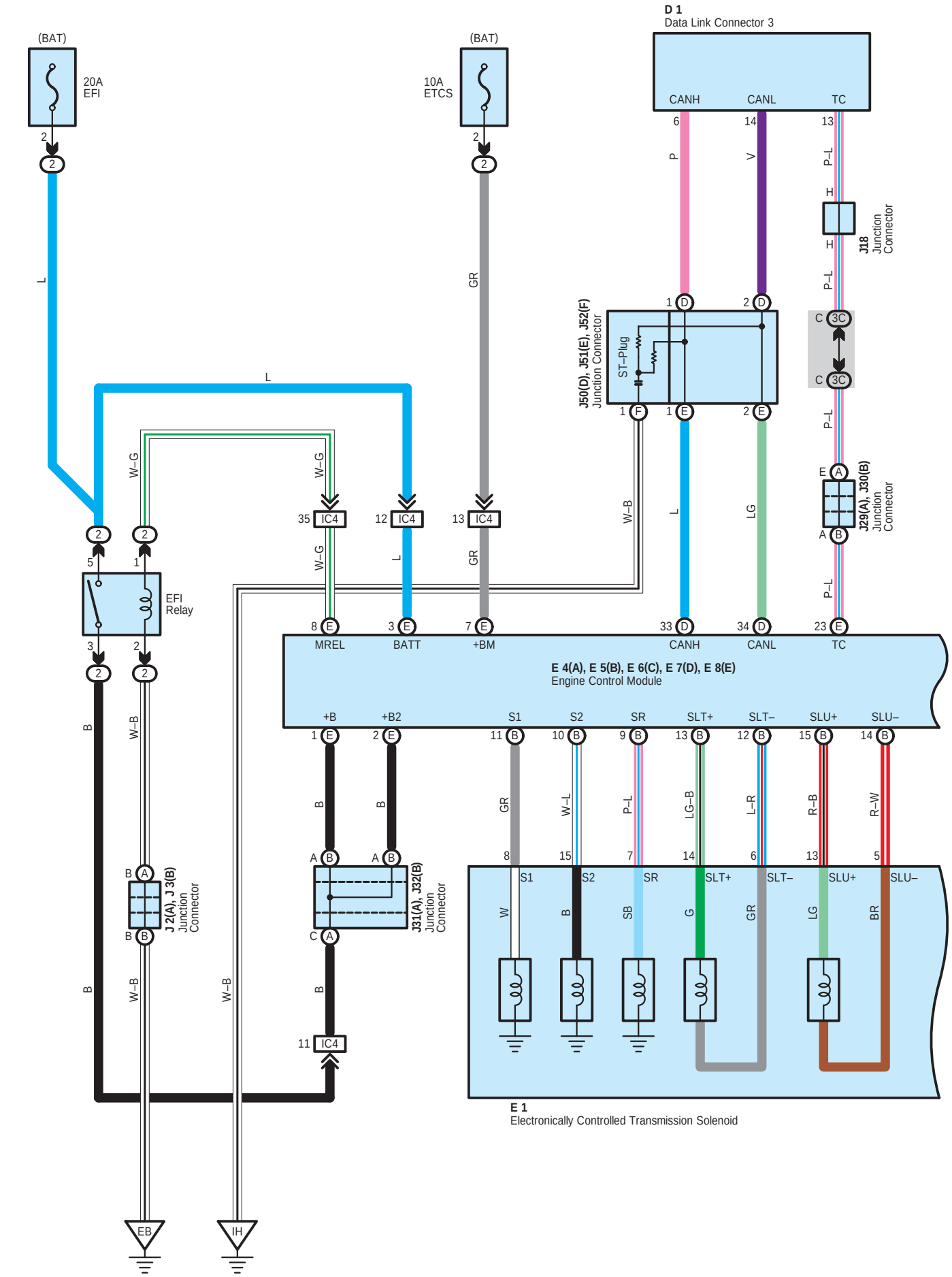
D 1
Data Link Connector 3
CANH
CANL
TC
(BAT)
20A
EFI
10A
ETCS
J18
Junction
Connector
J50(D), J51(E), J52(F)
Junction Connector
ST–Plug
J29(A), J30(B)
Junction
Connector
EFI
Relay
IC4
MREL
BATT
+BM
E 4(A), E 5(B), E 6(C), E 7(D), E 8(E)
Engine Control Module
+B
+B2
S1
S2
SR
SLT+
SLT–
SLU+
SLU–
J 2(A), J 3(B)
Junction
Connector
J31(A), J32(B)
Junction
Connector
E 1
Electronically Controlled Transmission Solenoid
EB
IH

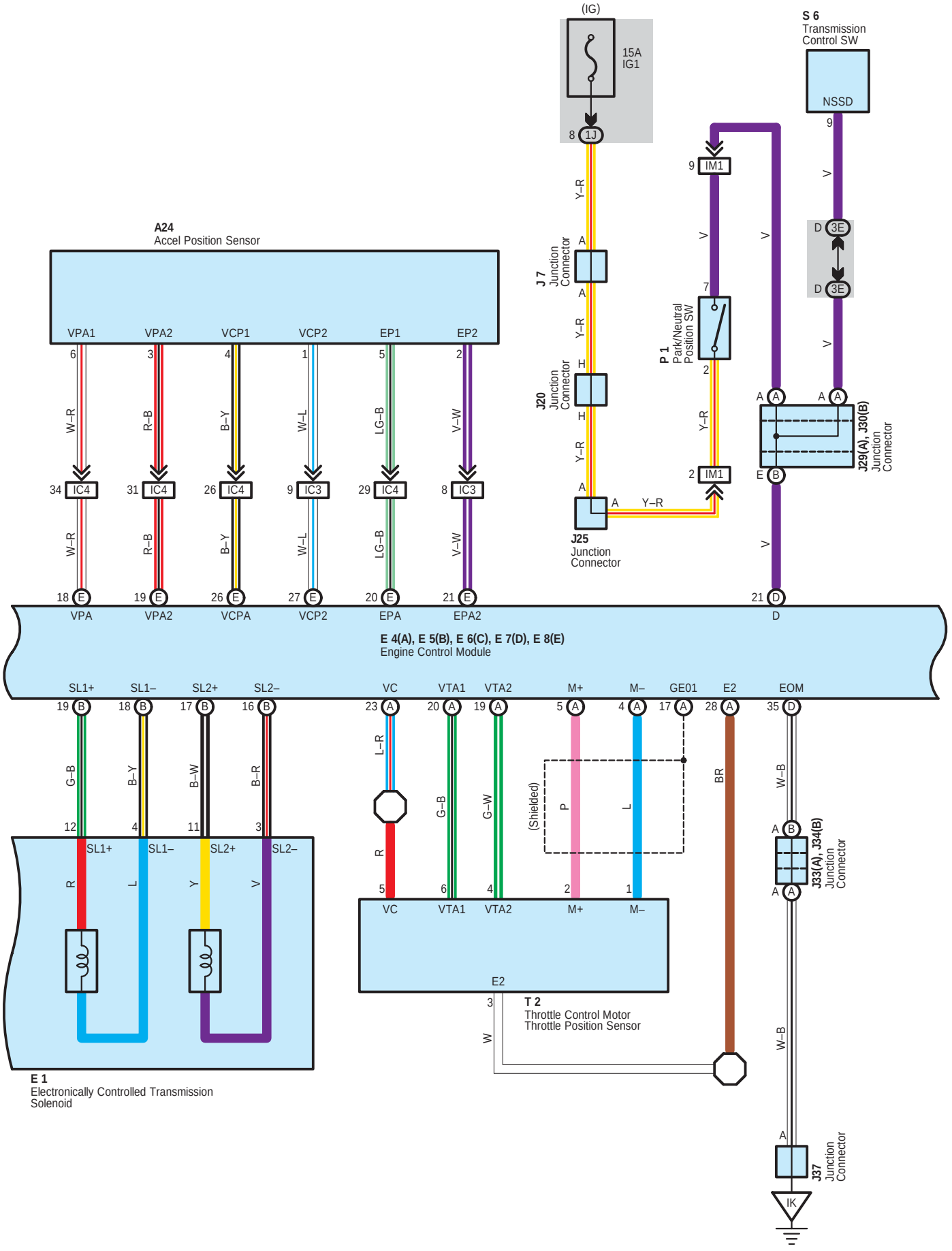
(IG)
15A
IG1
8 1J
S 6
Transmission
Control SW
NSSD
9
V
D 3E
D 3E
V
9 IM1
V
V
7
2
Y–R
2 IM1
A24
Accel Position Sensor
VPA1
VPA2
VCP1
VCP2
EP1
EP2
6
3
4
1
5
2
W–R
R–B
B–Y
W–L
LG–B
V–W
34 IC4
31 IC4
26 IC4
9 IC3
29 IC4
8 IC3
W–R
R–B
B–Y
W–L
LG–B
V–W
18 E
19 E
26 E
27 E
20 E
21 E
VPA
VPA2
VCPA
VCP2
EPA
EPA2
J 7
Junction
Connector
A
A
Y–R
J20
Junction
Connector
H
H
Y–R
A
A
Y–R
J25
Junction
Connector
P 1
Park/Neutral
Position SW
A A
A A
J29(A), J30(B)
Junction
Connector
E B
V
21 D
D
E 4(A), E 5(B), E 6(C), E 7(D), E 8(E)
Engine Control Module
SL1+
SL1–
SL2+
SL2–
VC
VTA1
VTA2
M+
M–
GE01
E2
EOM
19 B
18 B
17 B
16 B
23 A
20 A
19 A
5 A
4 A
17 A
28 A
35 D
G–B
B–Y
B–W
B–R
L–R
G–B
G–W
(Shielded)
P
L
BR
W–B
12
4
11
3
R
6
4
2
1
A B
A A
J33(A), J34(B)
Junction
Connector
SL1+
SL1–
SL2+
SL2–
R
L
Y
V
5
VC
VTA1
VTA2
M+
M–
E2
3
W
T 2
Throttle Control Motor
Throttle Position Sensor
W–B
A
J37
Junction
Connector
IK
E 1
Electronically Controlled Transmission
Solenoid

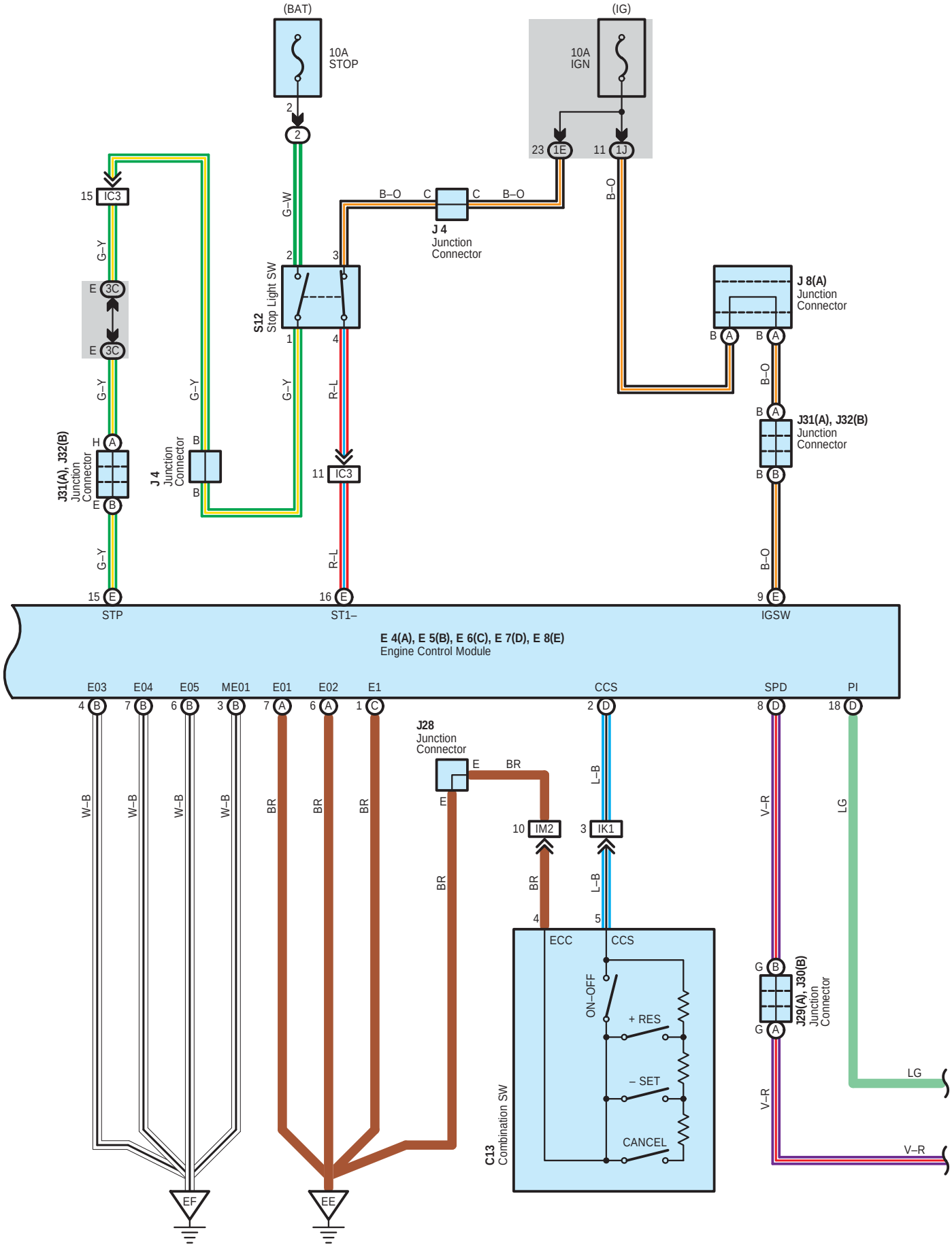
(BAT)
10A
STOP
(IG)
10A
IGN
23 1E
11 1J
B–O
C
J 4
Junction
Connector
15 IC3
G–Y
E 3C
S12
Stop Light SW
G–W
R–L
J 8(A)
Junction
Connector
J31(A), J32(B)
Junction
Connector
J 4
Junction
Connector
11 IC3
15 E
16 E
9 E
STP
ST1–
IGSW
E 4(A), E 5(B), E 6(C), E 7(D), E 8(E)
Engine Control Module
E03
E04
E05
ME01
E01
E02
E1
CCS
SPD
PI
W–B
BR
L–B
V–R
LG
J28
Junction
Connector
10 IM2
3 IK1
ECC
CCS
ON–OFF
+ RES
– SET
CANCEL
C13
Combination SW
J29(A), J30(B)
Junction
Connector
EF
EE

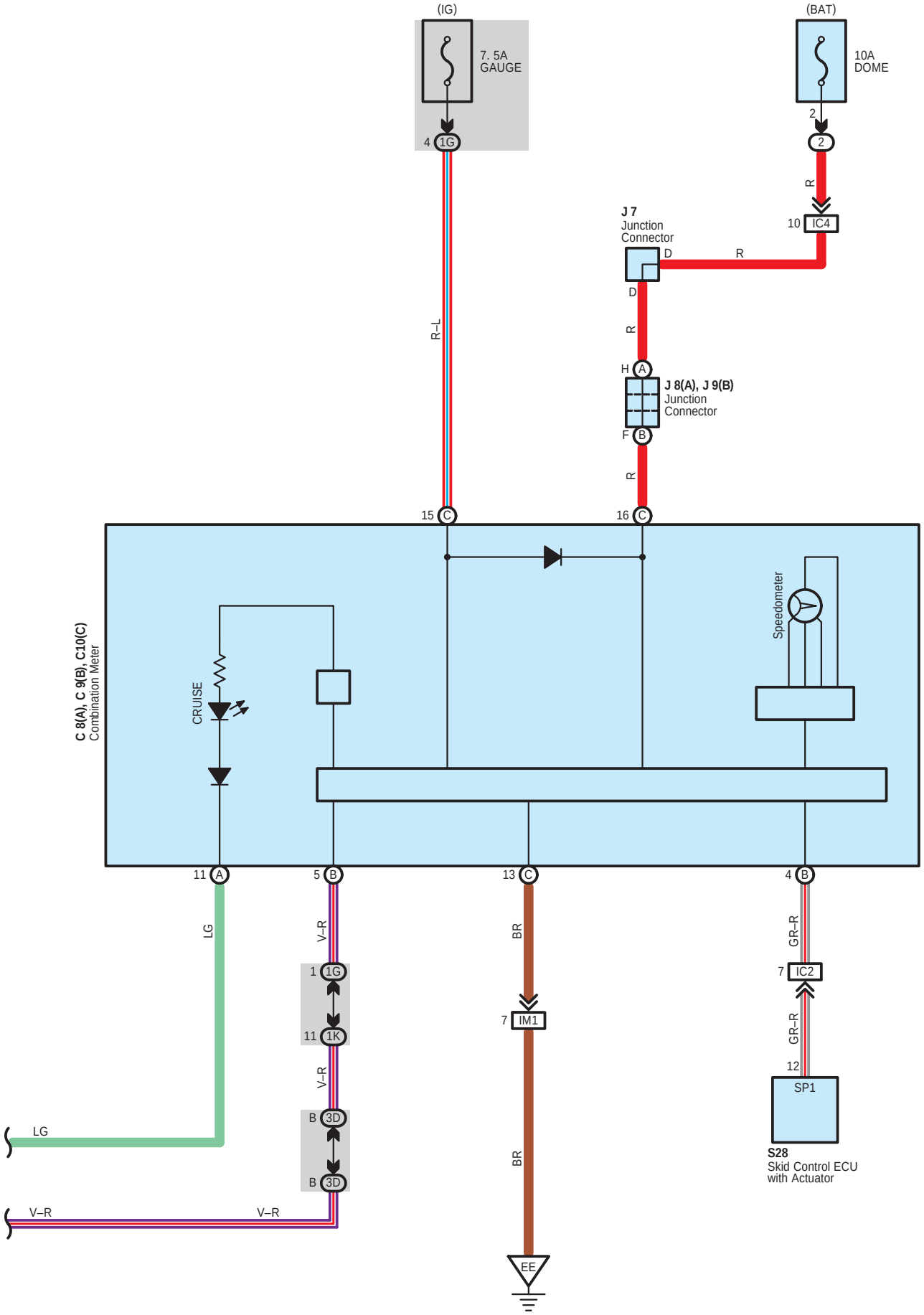
(IG)
7. 5A
GAUGE
4 1G
(BAT)
10A
DOME
2
2
R
10 IC4
J 7
Junction
Connector
D
R
D
R
H A
J 8(A), J 9(B)
Junction
Connector
F B
R
R–L
15 C
16 C
C 8(A), C 9(B), C10(C)
Combination Meter
CRUISE
Speedometer
11 A
5 B
13 C
4 B
LG
V–R
BR
GR–R
1 1G
11 1K
7 IM1
7 IC2
GR–R
12
SP1
V–R
B 3D
B 3D
LG
V–R
V–R
BR
EE
S28
Skid Control ECU
with Actuator

System Outline

The cruise control system is a constant vehicle speed controller in which control of the switch on the instrument panel makes it possible to automatically adjust the opening of the engine throttle valve without depressing of the accel pedal.

1. Set Operation

When the ON–OFF SW is turned on, the system starts preparations necessary for the cruise control and turns on the indicator light in the combination meter.

2. Set Speed Control

When the – SET SW is operated with the cruise control main SW turned on during travelling, the constant vehicle speed is controlled.

3. Coast Control

When the – SET SW is kept turned on during cruise control travelling, the engine control module controls the throttle valve to decelerate the vehicle. Every time the – SET SW is turned on instantaneously, the vehicle speed is decelerated approximately 1.5 km/h.

4. Accel Control

When the + RES SW is kept turned on during cruise control travelling, the engine control module controls the throttle valve to accelerate the vehicle. Every time the + RES SW is turned on instantaneously, the vehicle speed is accelerated approximately 1.5 km/h.

5. Resume Control

When the vehicle speed is above the low speed limit (Approximately 40 km/h, 25 mph) if the cruise control is cancelled, use of the + RES SW accelerates the vehicle to the speed level used before canceling the cruise control.

6. Manual Cancel Mechanism

If any of the following signals is input during cruise control travelling, the cruise control is cancelled.

* The stop light SW is turned on.
* The CANCEL SW is turned on.
* The ON–OFF SW is turned off.
* Gear is shifted from D position to other positions than D.

7. Auto Cancel Operation

* If any of the following conditions are detected, the set speed is erased and the control is canceled.

(1) Disconnection and/or short in the stop light SW

(2) Malfunction in the vehicle speed signal

(3) Malfunction in the electronic throttle parts

(4) Malfunction in the stop light SW input circuit

(5) Malfunction in the cancel circuit

(6) The actual vehicle speed becomes –16 km/h slower than the set speed

* If the following condition is detected, the set speed is kept and the control is canceled.

(1) The actual vehicle speed becomes slower than the minimum speed limit.

8. Overdrive Control Function

Overdrive is sometimes cut off on gradients during cruise control driving. When end of climbing gradient is determined by throttle opening degree information after overdrive is canceled, control is reset to overdrive condition after overdrive resetting timer operation. Also, when overdrive is cut off during accelerator resuming control, control is reset to overdrive condition when accelerator resuming control is finished.

: Parts Location

Code	See Page	Code	See Page	Code	See Page
A24	36	J3 B	35 (1GR–FE)	J33 A	38
C8 A	37	J4	38	J34 B	38
C9 B	37	J7	38	J37	38
C10 C	37	J8 A	38	J50 D	38
C13	37	J9 B	38	J51 E	38
D1	37	J18	38	J52 F	38
E1	34 (1GR–FE)	J20	38	P1	35 (1GR–FE)
E4 A	37	J25	38	S6	39
E5 B	37	J28	38	S12	39
E6 C	37	J29 A	38	S28	35 (1GR–FE)
E7 D	37	J30 B	38	T2	35 (1GR–FE)
E8 E	37	J31 A	38		
J2 A	35 (1GR–FE)	J32 B	38		

: Relay Blocks

Code	See Page	Relay Blocks (Relay Block Location)
2	22	Engine Room R/B (Engine Compartment Left)

: Junction Block and Wire Harness Connector

Code	See Page	Junction Block and Wire Harness (Connector Location)
1E	24	Engine Room Main Wire and Driver Side J/B (Lower Finish Panel)
1G	25	Instrument Panel Wire and Driver Side J/B (Lower Finish Panel)
1J		
1K		
3C	28	Instrument Panel Wire and Center J/B (Instrument Panel Brace RH)
3D		
3E		

: Connector Joining Wire Harness and Wire Harness

Code	See Page	Joining Wire Harness and Wire Harness (Connector Location)
IC2	46	Instrument Panel Wire and Engine Room Main Wire (Left Kick Panel)
IC3		
IC4		
IK1	47	Instrument Panel Wire and Instrument Panel Wire (Left Upper Side of the Glove Box)
IM1	47	Engine Wire and Instrument Panel Wire (Right Side of Blower Unit)
IM2		

: Ground Points

Code	See Page	Ground Points Location
EB	45 (1GR–FE)	Front Left Fender
EE	45 (1GR–FE)	Rear Side of Right Bank Cylinder Block
EF	45 (1GR–FE)	Rear Side of Left Bank Cylinder Block
IH	46	Instrument Panel Brace LH
IK	46	Right Kick Panel

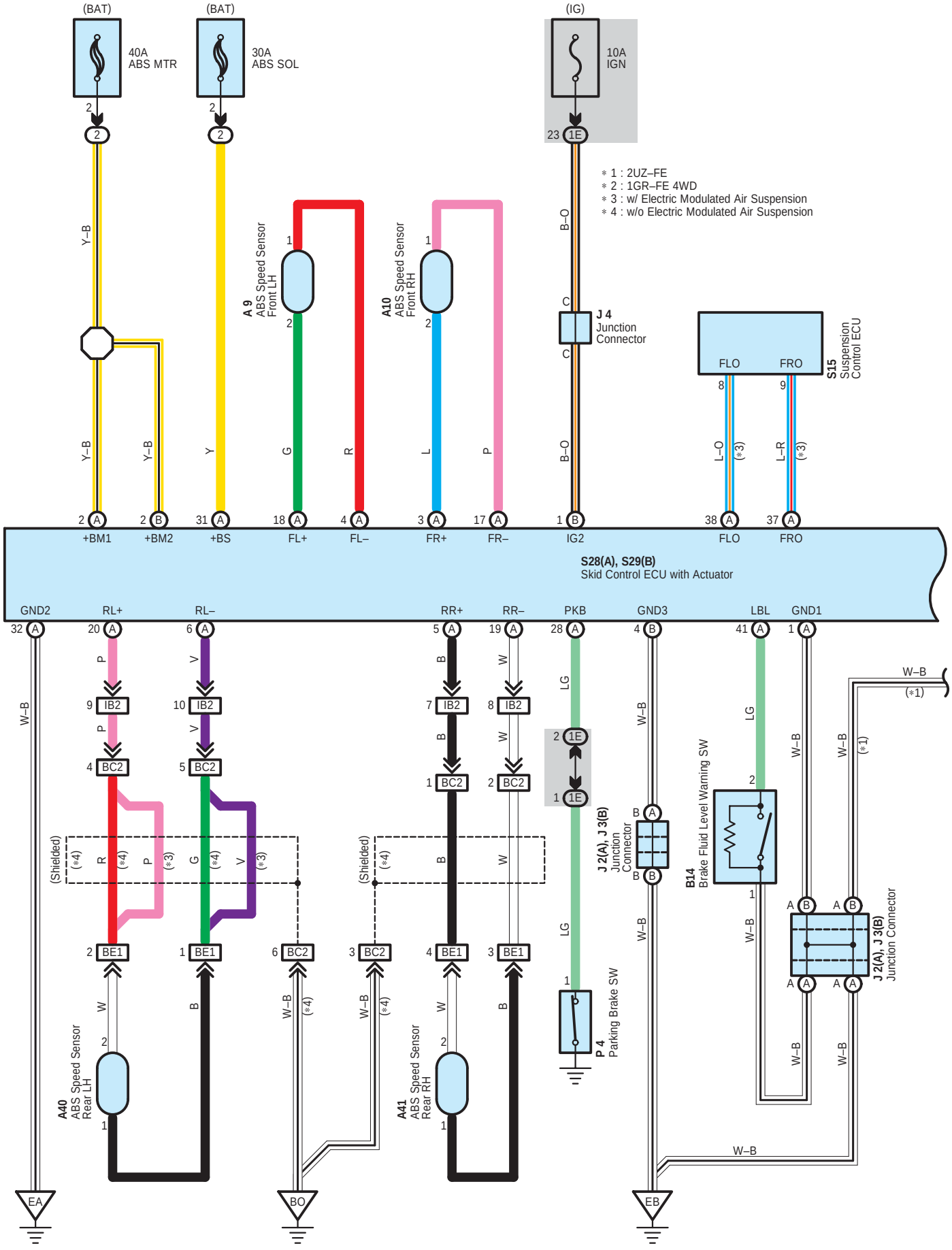
(BAT)
40A
ABS MTR
(BAT)
30A
ABS SOL
(IG)
10A
IGN
* 1 : 2UZ–FE
* 2 : 1GR–FE 4WD
* 3 : w/ Electric Modulated Air Suspension
* 4 : w/o Electric Modulated Air Suspension
A 9
ABS Speed Sensor
Front LH
A10
ABS Speed Sensor
Front RH
J 4
Junction
Connector
S15
Suspension
Control ECU
FLO
FRO
+BM1
+BM2
+BS
FL+
FL–
FR+
FR–
IG2
FLO
FRO
S28(A), S29(B)
Skid Control ECU with Actuator
GND2
RL+
RL–
RR+
RR–
PKB
GND3
LBL
GND1
(Shielded)
A40
ABS Speed Sensor
Rear LH
A41
ABS Speed Sensor
Rear RH
P 4
Parking Brake SW
J 2(A), J 3(B)
Junction
Connector
B14
Brake Fluid Level Warning SW
W–B
(*1)
EA
BO
EB

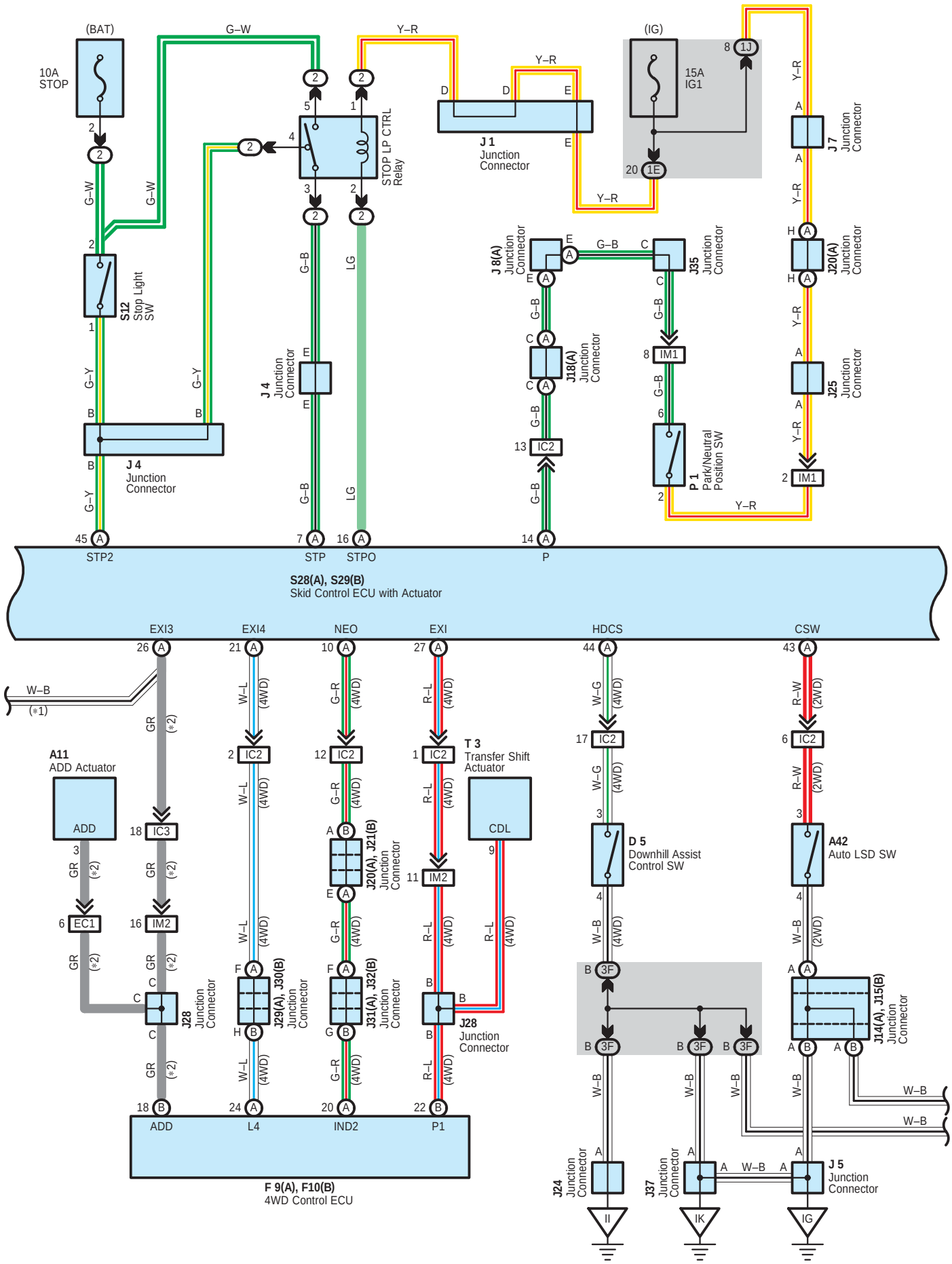
(BAT)
10A
STOP
G–W
Y–R
STOP LP CTRL
Relay
J 1
Junction
Connector
(IG)
15A
IG1
J 7
Junction
Connector
S12
Stop Light
SW
J 4
Junction
Connector
J 8(A)
Junction
Connector
J35
Junction
Connector
J18(A)
Junction
Connector
J20(A)
Junction
Connector
J25
Junction
Connector
P 1
Park/Neutral
Position SW
STP2
STP
STPO
P
S28(A), S29(B)
Skid Control ECU with Actuator
EXI3
EXI4
NEO
EXI
HDCS
CSW
W–B
(*1)
A11
ADD Actuator
ADD
T 3
Transfer Shift
Actuator
CDL
D 5
Downhill Assist
Control SW
A42
Auto LSD SW
J28
Junction
Connector
J29(A), J30(B)
Junction
Connector
J31(A), J32(B)
Junction
Connector
J20(A), J21(B)
Junction
Connector
J14(A), J15(B)
Junction
Connector
J24
Junction
Connector
J37
Junction
Connector
J 5
Junction
Connector
F 9(A), F10(B)
4WD Control ECU
ADD
L4
IND2
P1
II
IK
IG

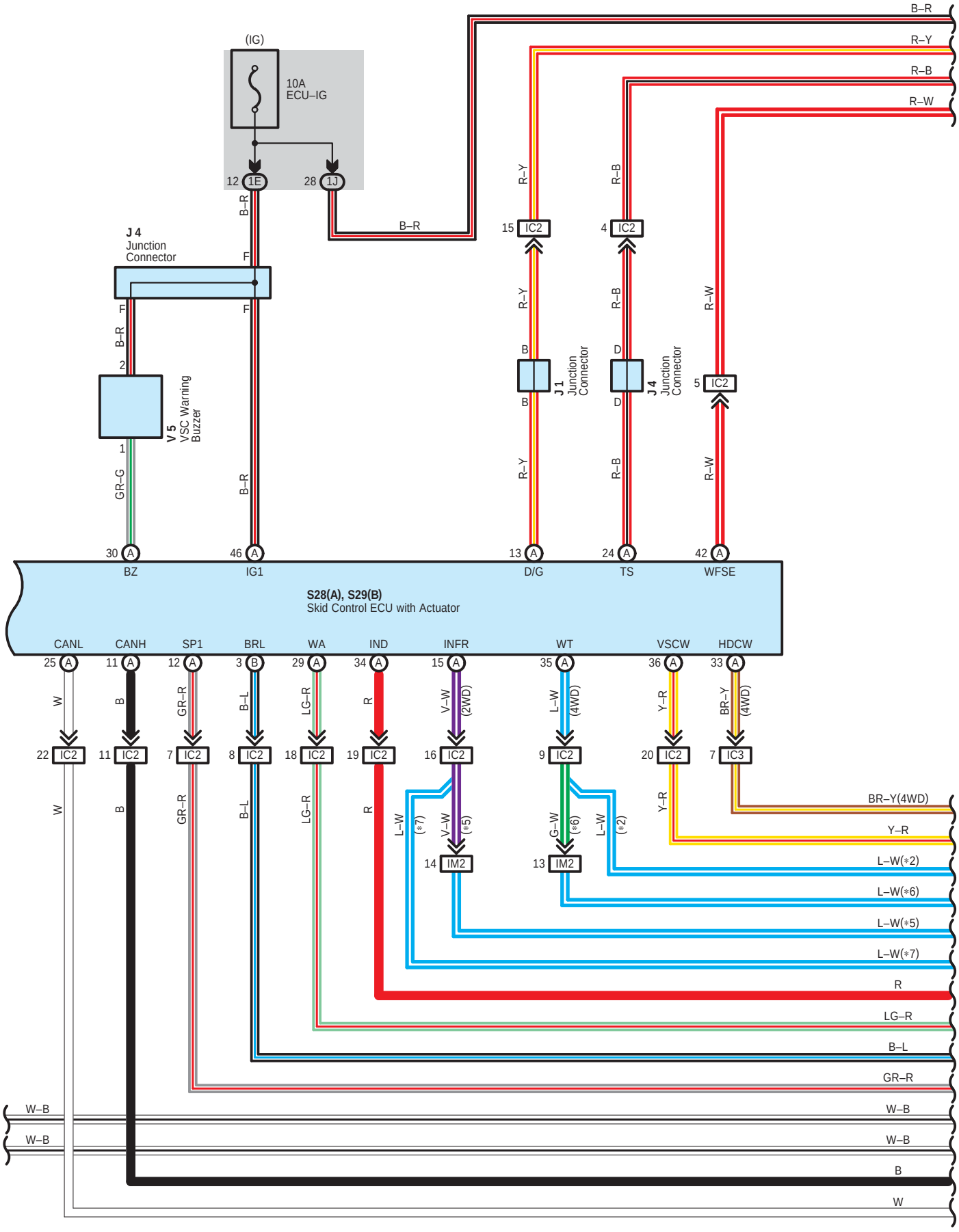
(IG)
10A
ECU–IG
12 1E
28 1J
B–R
R–Y
R–B
R–W
J 4
Junction
Connector
F
B–R
2
V 5
VSC Warning
Buzzer
1
GR–G
15 IC2
4 IC2
5 IC2
B
D
J 1
Junction
Connector
J 4
Junction
Connector
30 A
BZ
46 A
IG1
13 A
D/G
24 A
TS
42 A
WFSE
S28(A), S29(B)
Skid Control ECU with Actuator
CANL
CANH
SP1
BRL
WA
IND
INFR
WT
VSCW
HDCW
25 A
11 A
12 A
3 B
29 A
34 A
15 A
35 A
36 A
33 A
W
B
GR–R
B–L
LG–R
R
V–W
(2WD)
L–W
(4WD)
Y–R
BR–Y
(4WD)
22 IC2
11 IC2
7 IC2
8 IC2
18 IC2
19 IC2
16 IC2
9 IC2
20 IC2
7 IC3
L–W
(∗7)
V–W
(∗5)
G–W
(∗6)
L–W
(∗2)
14 IM2
13 IM2
BR–Y(4WD)
Y–R
L–W(∗2)
L–W(∗6)
L–W(∗5)
L–W(∗7)
R
LG–R
B–L
GR–R
W–B
W–B
W–B
W–B
B
W

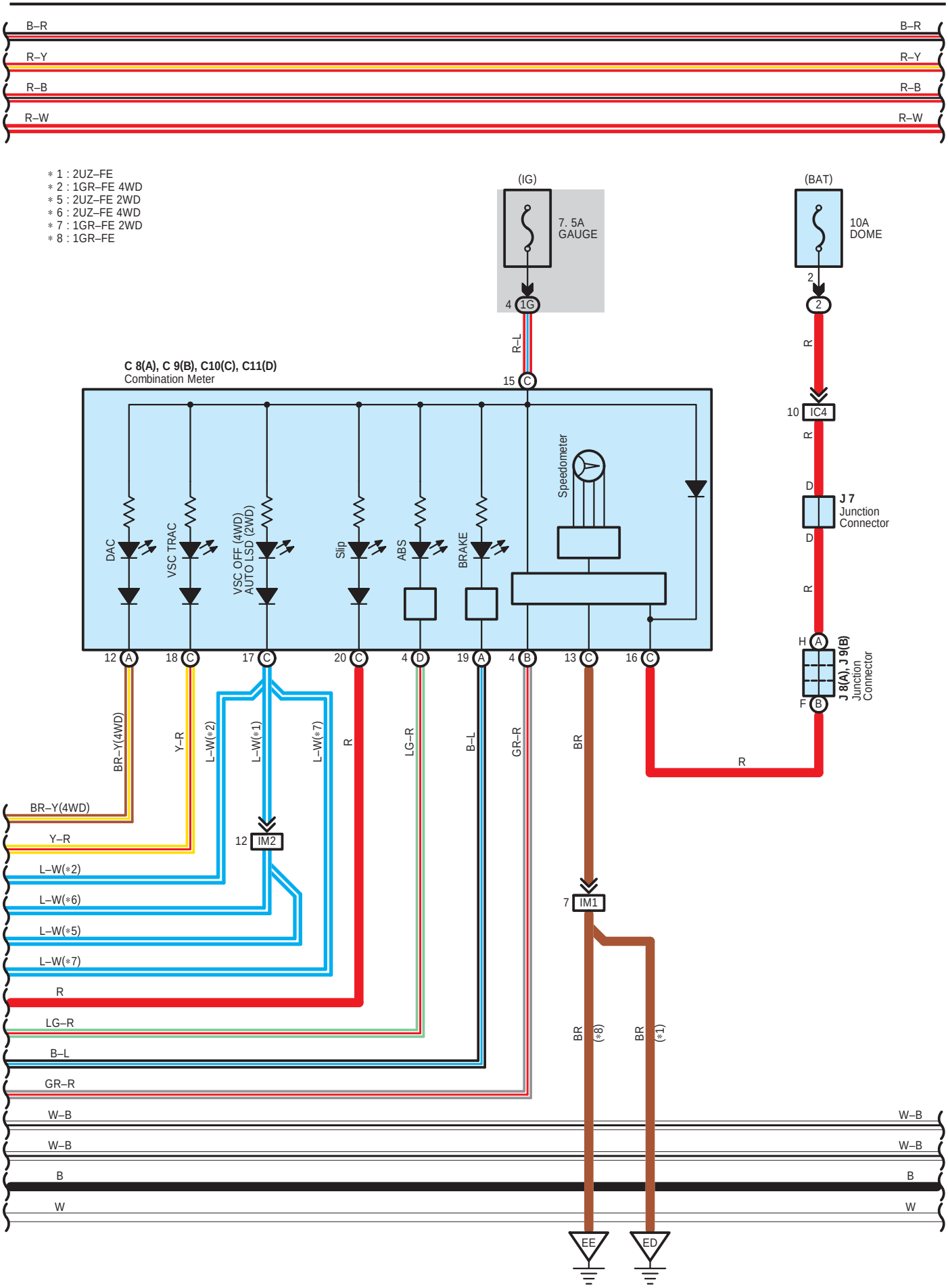
B–R
R–Y
R–B
R–W
∗ 1 : 2UZ–FE
∗ 2 : 1GR–FE 4WD
∗ 5 : 2UZ–FE 2WD
∗ 6 : 2UZ–FE 4WD
∗ 7 : 1GR–FE 2WD
∗ 8 : 1GR–FE
(IG)
7. 5A
GAUGE
(BAT)
10A
DOME
4 1G
2
2
R–L
R
15 C
10 IC4
R
C 8(A), C 9(B), C10(C), C11(D)
Combination Meter
D
J 7
Junction
Connector
D
R
DAC
VSC TRAC
VSC OFF (4WD)
AUTO LSD (2WD)
Slip
ABS
BRAKE
Speedometer
H A
J 8(A), J 9(B)
Junction
Connector
F B
12 A
18 C
17 C
20 C
4 D
19 A
4 B
13 C
16 C
BR–Y(4WD)
Y–R
L–W(∗2)
L–W(∗1)
L–W(∗7)
R
LG–R
B–L
GR–R
BR
R
12 IM2
7 IM1
BR (∗8)
BR (∗1)
BR–Y(4WD)
Y–R
L–W(∗2)
L–W(∗6)
L–W(∗5)
L–W(∗7)
R
LG–R
B–L
GR–R
W–B
W–B
B
W
EE
ED

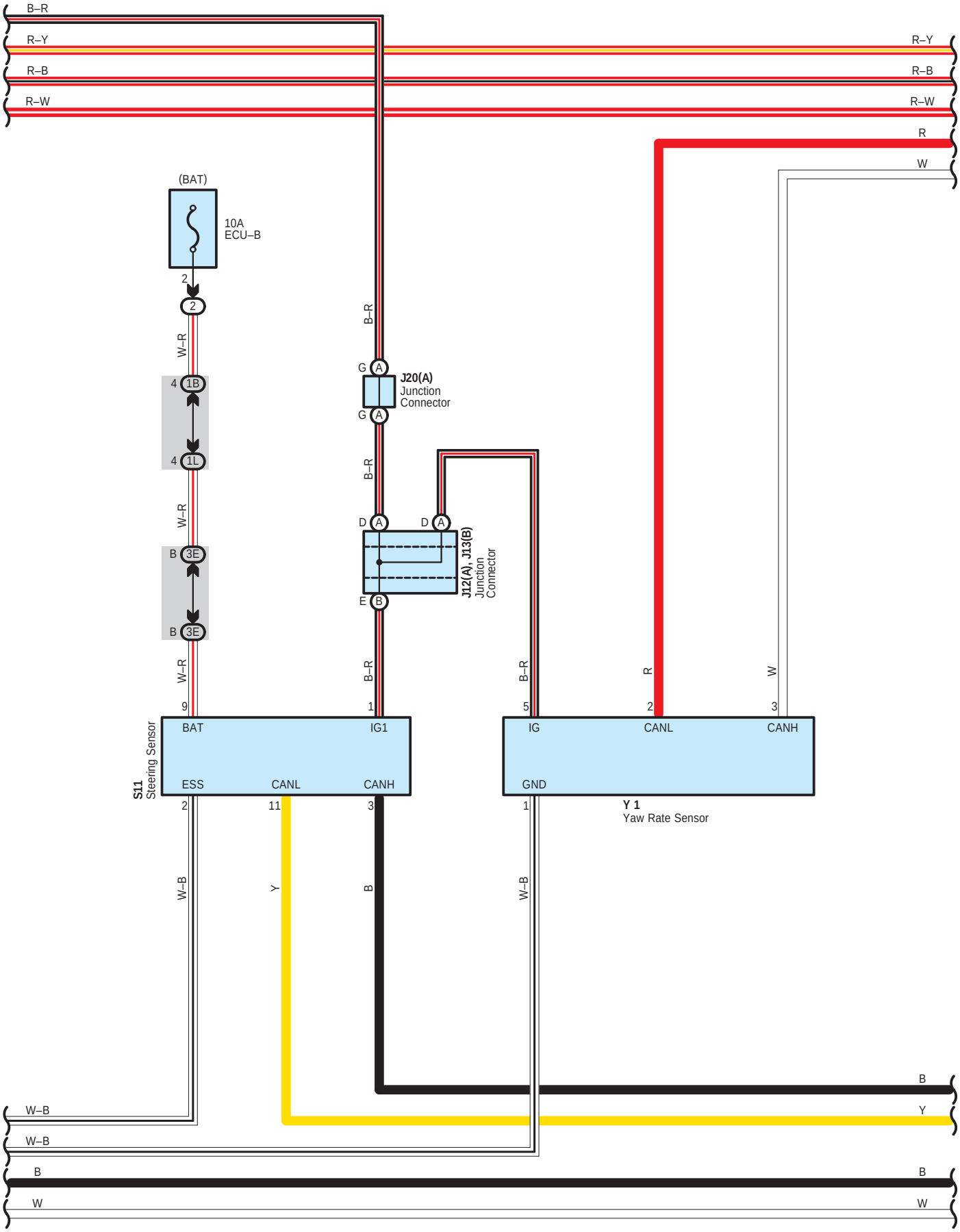
B–R
R–Y
R–B
R–W
R–Y
R–B
R–W
R
W
(BAT)
10A
ECU–B
2
2
W–R
4 1B
4 1L
W–R
B 3E
B 3E
W–R
9
B–R
G A
J20(A)
Junction
Connector
G A
B–R
D A
D A
J12(A), J13(B)
Junction
Connector
E B
B–R
1
B–R
5
R
2
W
3
S11
Steering Sensor
BAT
IG1
ESS
CANL
CANH
IG
CANL
CANH
GND
2
11
3
1
Y 1
Yaw Rate Sensor
W–B
Y
B
W–B
B
B
W–B
Y
W–B
B
B
W
W

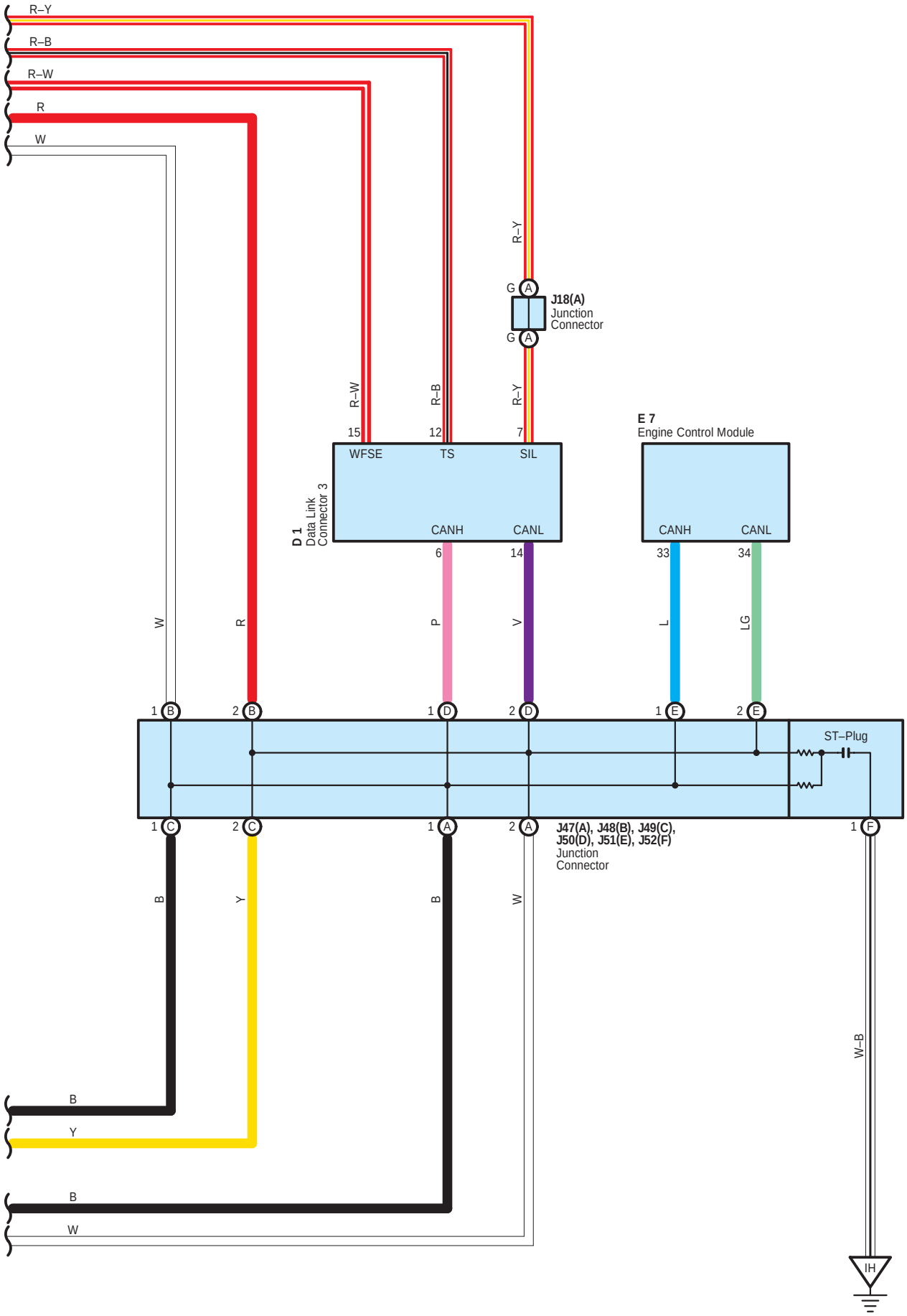
R–Y
R–B
R–W
R
W
R–Y
G A
J18(A)
Junction
Connector
G A
R–W
R–B
R–Y
15
12
7
WFSE
TS
SIL
D 1
Data Link
Connector 3
CANH
CANL
6
14
E 7
Engine Control Module
CANH
CANL
33
34
W
R
P
V
L
LG
1 B
2 B
1 D
2 D
1 E
2 E
ST–Plug
1 C
2 C
1 A
2 A
J47(A), J48(B), J49(C),
J50(D), J51(E), J52(F)
Junction
Connector
1 F
B
Y
B
W
W–B
B
Y
B
W
IH

System Outline

1. Normal Operation

The VSC system helps prevent the vehicle from slipping sideways as a result of strong front wheel skid or strong rear wheel skid during cornering.

The followings are two possible circumstances in which the tires exceed their lateral grip limit. The VSC system is designed to help control the vehicle behavior by controlling the engine output and the brake at each wheel when the vehicle is under one of the conditions indicated below.

* When the front wheels lose grip in relation to the rear wheels (Strong front wheel skid tendency).
* When the rear wheels lose grip in relation to the front wheels (Strong rear wheel skid tendency).

2. Electronic Brake–Force Distribution

Skid control ECU with actuator distributes appropriate brake–force to front and rear wheels (Control of brake–force distribution to front and rear wheels) corresponding to the vehicle driving conditions. It also makes effective use of rear wheel brake–force to match the loading condition and decelerating of the vehicle, resulting in reducing brake pedal depression and ensuring effective braking. In braking during making a turn, the ECU controls appropriate brake–force distribution to right and left wheels (Control of brake–force distribution to right and left wheels) to ensure stability and braking of the vehicle.

3. Downhill Assist Control Operation

The downhill assist control operation controls braking action of each wheel to help prevent an out–of–balance posture of the vehicle when descending a steep hill or traveling at a speed exceeding the threshold of wheel gripping capability. When the downhill assist control is in operation, the brake system controls vehicle speed within the range of 5 to 7 km/h.

For the downhill assist control to be operative, all of the following conditions have to be met:

* Downhill assist control switch = ON
* Transfer L4 selected
* Vehicle speed is 5 km/h or more, but less than 25 km/h.
* Accelerator pedal OFF
* Brake pedal OFF

4. Hill–Start Assist Control Operation

When starting on a steep hill for ascending, the hill–start assist control automatically puts the brake on momentarily when the driver switches from the brake pedal to the accelerator pedal, to help the driver start the vehicle safely and smoothly.

Please bear in mind, however, that it activates the brake system only for 3 seconds.

For the hill–start assist control to be operative all of the following conditions have to be met:

* Shift position = D, 2, or L
* No vehicle move due to wheel slip
* Vehicle speed > 0 km/h

5. Active TRAC (4WD)

During rugged off–road driving, this function controls the engine output and the brake fluid pressure that is applied to the slipping wheel, and distributes the drive force that would have been lost through the slippage to the remaining wheels in order to achieve a LSD effect.

6. Auto LSD (2WD)

Auto LSD fulfills the function of LSD by using the system of TRAC. It helps ensures to recover from run–off condition and to take off on roads with much travel resistance such as sand.

: Parts Location

Code	See Page	Code	See Page	Code	See Page
A9	32 (2UZ–FE)	J2 A	35 (1GR–FE)	J35	38
	34 (1GR–FE)	J3 B	33 (2UZ–FE)	J37	38
A10	32 (2UZ–FE)		35 (1GR–FE)	J47 A	38
	34 (1GR–FE)	J4	38	J48 B	38
A11	34 (1GR–FE)	J5	38	J49 C	38
A40	40	J7	38	J50 D	38
A41	40	J8 A	38	J51 E	38
A42	36	J9 B	38	J52 F	38
B14	32 (2UZ–FE)	J12 A	38	P1	33 (2UZ–FE)
	34 (1GR–FE)	J13 B	38		35 (1GR–FE)
C8 A	37	J14 A	38	P4	39
C9 B	37	J15 B	38	S11	39
C10 C	37	J18 A	38	S12	39
C11 D	37	J20 A	38	S15	39
D1	37	J21 B	38	S28 A	33 (2UZ–FE)
D5	37	J24	38		35 (1GR–FE)
E7	37	J25	38	S29 B	33 (2UZ–FE)
F9 A	37	J28	38		35 (1GR–FE)
F10 B	37	J29 A	38	T3	33 (2UZ–FE)
J1	33 (2UZ–FE)	J30 B	38		35 (1GR–FE)
	35 (1GR–FE)	J31 A	38	V5	39
J2 A	33 (2UZ–FE)	J32 B	38	Y1	39

: Relay Blocks

Code	See Page	Relay Blocks (Relay Block Location)
2	22	Engine Room R/B (Engine Compartment Left)

: Junction Block and Wire Harness Connector

Code	See Page	Junction Block and Wire Harness (Connector Location)
1B	24	Engine Room Main Wire and Driver Side J/B (Lower Finish Panel)
1E		
1G	25	Instrument Panel Wire and Driver Side J/B (Lower Finish Panel)
1J		
1L		
3E	28	Instrument Panel Wire and Center J/B (Instrument Panel Brace RH)
3F		

: Connector Joining Wire Harness and Wire Harness

Code	See Page	Joining Wire Harness and Wire Harness (Connector Location)
EC1	45 (1GR–FE)	Engine Wire and Differential Wire (Near the Front Differential)
IB2	46	Floor No.2 Wire and Engine Room Main Wire (Left Kick Panel)
IC2	46	Instrument Panel Wire and Engine Room Main Wire (Left Kick Panel)
IC3		
IC4		
IM1	47	Engine Wire and Instrument Panel Wire (Right Side of Blower Unit)
IM2		
BC2	48	Frame Wire and Floor No.2 Wire (Under the Rear LH Seat)
BE1	48	Frame Wire and Skid Control Sensor Wire (Right Side of No.5 Crossmember)

▽ : **Ground Points**

Code	See Page	Ground Points Location
EA	44 (2UZ–FE)	Front Right Fender
	45 (1GR–FE)	
EB	44 (2UZ–FE)	Front Left Fender
	45 (1GR–FE)	
ED	44 (2UZ–FE)	Left Bank Cylinder Head
EE	44 (2UZ–FE)	Rear Side of Cylinder Block
	45 (1GR–FE)	Rear Side of Right Bank Cylinder Block
IG	46	Left Kick Panel
IH	46	Instrument Panel Brace LH
II	46	Instrument Panel Brace RH
IK	46	Right Kick Panel
BO	48	Rear Pillar LH

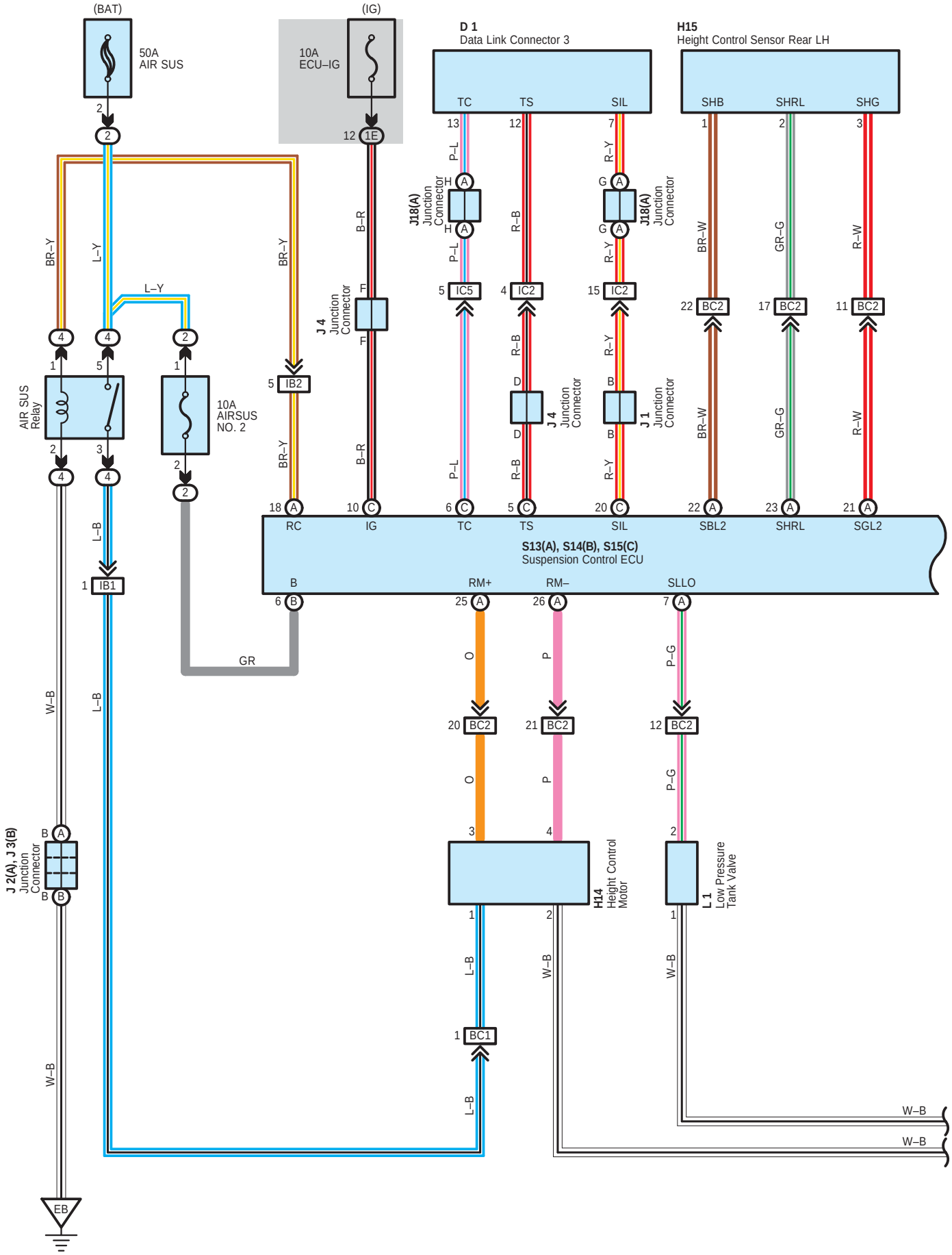
(BAT)
50A
AIR SUS
(IG)
10A
ECU–IG
D 1
Data Link Connector 3
TC
TS
SIL
H15
Height Control Sensor Rear LH
SHB
SHRL
SHG
J18(A)
Junction
Connector
J 4
Junction
Connector
J 1
Junction
Connector
AIR SUS
Relay
10A
AIRSUS
NO. 2
IB2
IB1
IC5
IC2
BC2
BC1
RC
IG
SBL2
SGL2
S13(A), S14(B), S15(C)
Suspension Control ECU
RM+
RM–
SLLO
GR
J 2(A), J 3(B)
Junction
Connector
H14
Height Control
Motor
L 1
Low Pressure
Tank Valve
EB
BR–Y
L–Y
B–R
P–L
R–B
R–Y
BR–W
GR–G
R–W
L–B
W–B
O
P
P–G

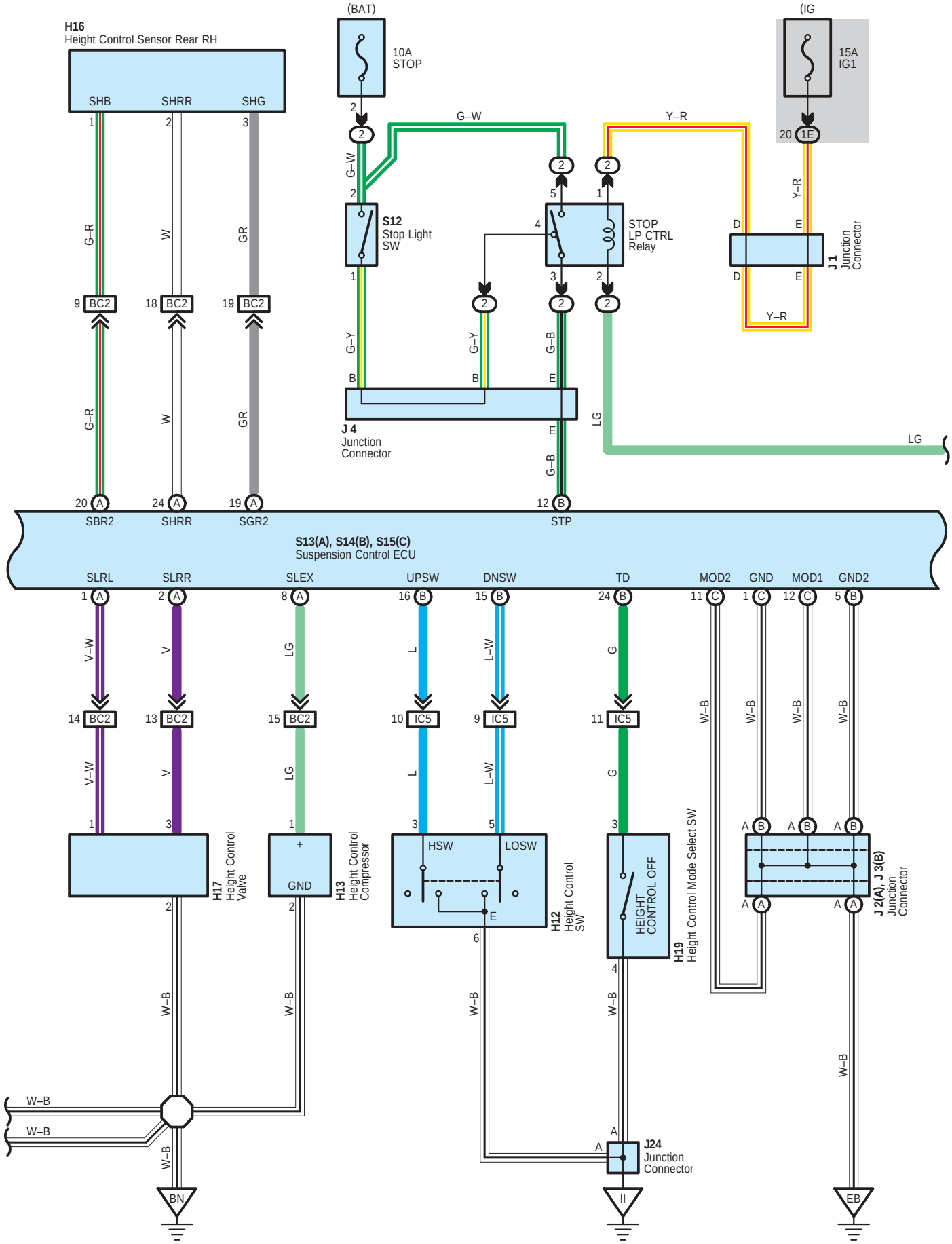
H16
Height Control Sensor Rear RH
SHB
SHRR
SHG
G–R
W
GR
9 BC2
18 BC2
19 BC2
20 A
24 A
19 A
SBR2
SHRR
SGR2
(BAT)
10A
STOP
G–W
S12
Stop Light
SW
G–Y
B
J 4
Junction
Connector
G–B
E
12 B
STP
STOP
LP CTRL
Relay
Y–R
LG
(IG)
15A
IG1
20 1E
D
E
J 1
Junction
Connector
S13(A), S14(B), S15(C)
Suspension Control ECU
SLRL
SLRR
SLEX
UPSW
DNSW
TD
MOD2
GND
MOD1
GND2
V–W
V
LG
L
L–W
G
W–B
14 BC2
13 BC2
15 BC2
10 IC5
9 IC5
11 IC5
H17
Height Control
Valve
H13
Height Control
Compressor
HSW
LOSW
H12
Height Control
SW
HEIGHT
CONTROL OFF
H19
Height Control Mode Select SW
J 2(A), J 3(B)
Junction
Connector
J24
Junction
Connector
BN
EB

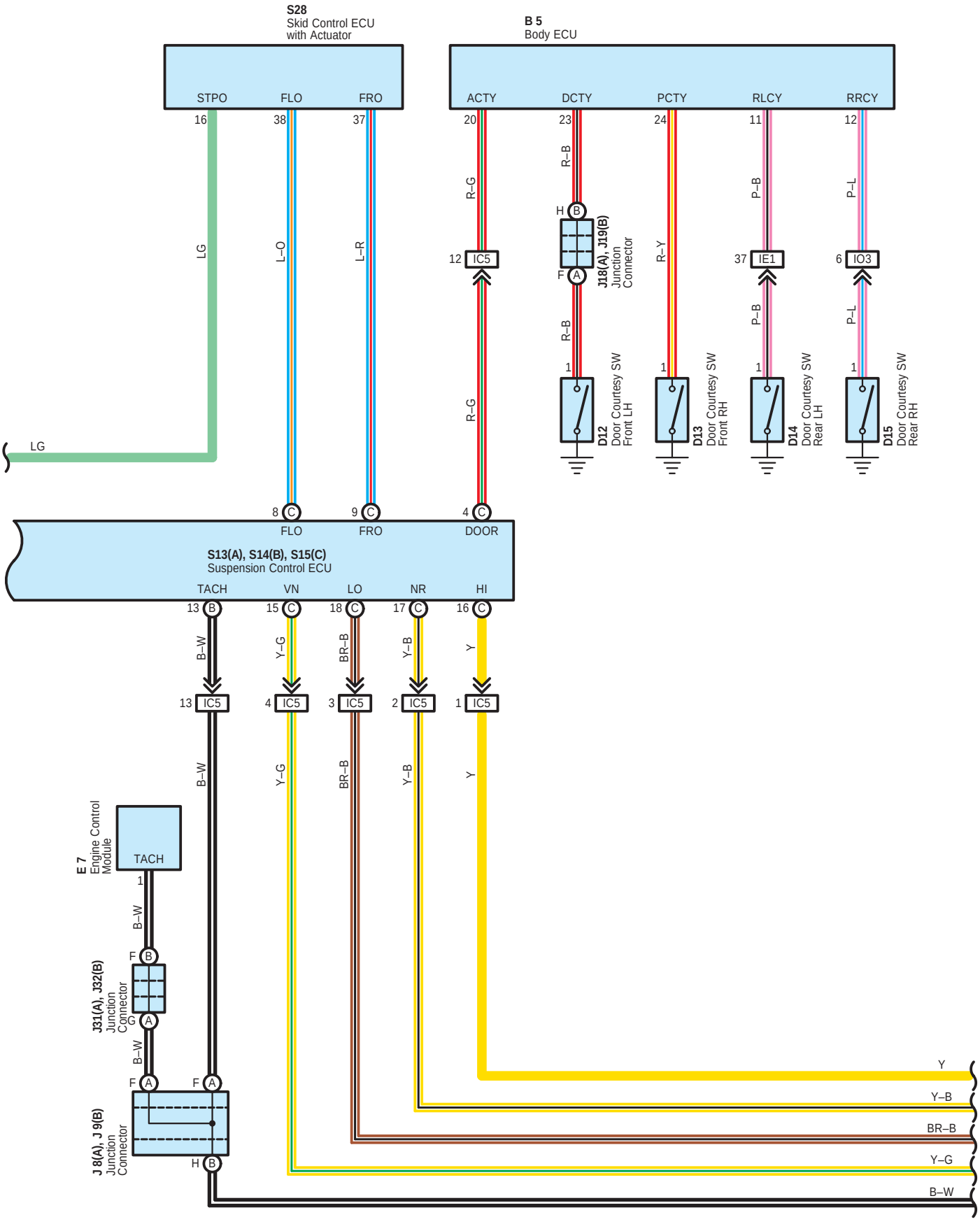
S28
Skid Control ECU
with Actuator
B 5
Body ECU
STPO
FLO
FRO
ACTY
DCTY
PCTY
RLCY
RRCY
16
38
37
20
23
24
11
12
LG
L–O
L–R
R–G
R–B
P–B
P–L
H
B
F
A
J18(A), J19(B)
Junction
Connector
12
IC5
37
IE1
6
IO3
1
D12
Door Courtesy SW
Front LH
D13
Door Courtesy SW
Front RH
D14
Door Courtesy SW
Rear LH
D15
Door Courtesy SW
Rear RH
8
C
9
C
4
C
FLO
FRO
DOOR
S13(A), S14(B), S15(C)
Suspension Control ECU
TACH
VN
LO
NR
HI
13
15
18
17
16
B–W
Y–G
BR–B
Y–B
Y
4
3
2
1
E 7
Engine Control
Module
J31(A), J32(B)
Junction
Connector
G
J 8(A), J 9(B)
Junction
Connector
Y
Y–B
BR–B
Y–G
B–W

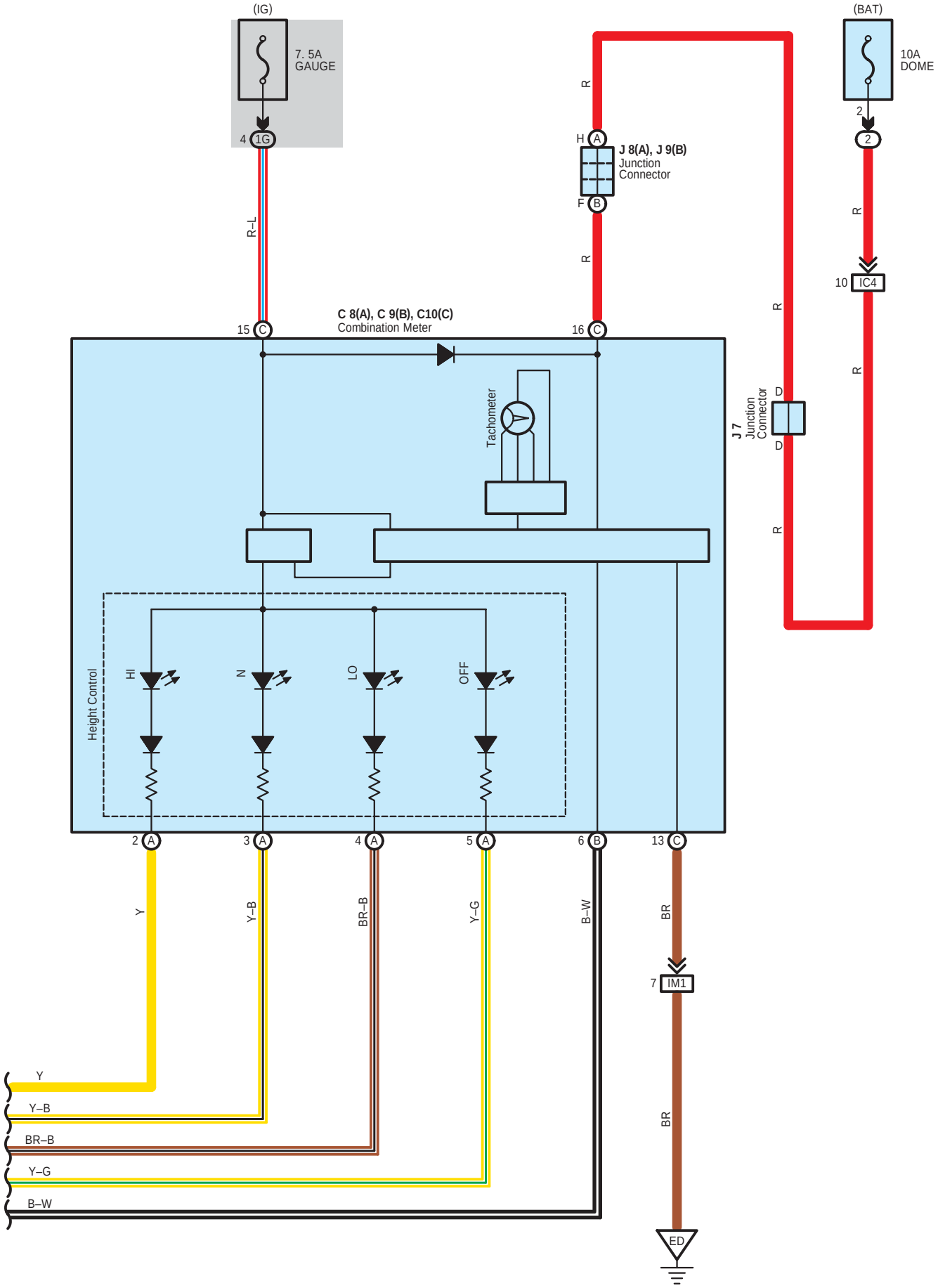
(IG)
7. 5A
GAUGE
4 1G
R–L
15 C
C 8(A), C 9(B), C10(C)
Combination Meter
16 C
R
H A
J 8(A), J 9(B)
Junction
Connector
F B
R
(BAT)
10A
DOME
2
2
R
10 IC4
R
R
J 7
Junction
Connector
D
D
R
Tachometer
Height Control
HI
N
LO
OFF
2 A
3 A
4 A
5 A
6 B
13 C
Y
Y–B
BR–B
Y–G
B–W
BR
7 IM1
BR
ED
Y
Y–B
BR–B
Y–G
B–W

System Outline

* The electric modulated suspension with height control is a system designed to maintain a constant vehicle height by means of an electro–pneumatic system in the rear suspension to cope with change in load such as passenger number and/or weight of cargo in the vehicle. With the three–height–control switch on the console, the driver can set the vehicle height from the three different height modes (High, normal and low): ”High mode” for rough terrain and ”Low mode” for passenger to get on/off, and for cargo to be loaded/unloaded.
* This system has five basic controls as shown below:
* Auto leveling control
  This control maintains a constant rear vehicle height regardless of change in load such as passenger number and/or weight of cargo in the vehicle.
* Vehicle height switchover control
  This control switches the height mode to the mode selected with the height control switch.
  * High mode (+ 40 mm / 1.6 in.)
  * Low mode (– 20 mm / 0.8 in.)
* Speed sensing control
  Regardless of the initial setting of the vehicle height, ”High mode” or ”Low mode,” this control automatically switches the vehicle height mode to the optimum ”Normal mode” in the following conditions:
  * When the vehicle speed reaches or exceeds 30 km/h with ”High mode,” or;
  * When the vehicle speed reaches or exceeds 5 km/h with ”Low mode.”
* Subsequent control after ignition switch off
  After the ignition switch is turned OFF, this control lowers the rear vehicle height for passengers to get off, etc.
* Height control OFF control
  If the system is turned OFF with the vehicle height control switch, the vehicle can be jacked up or towed.

: Parts Location

Code	See Page	Code	See Page	Code	See Page
B5	36	H14	40	J18 A	38
C8 A	37	H15	40	J19 B	38
C9 B	37	H16	40	J24	38
C10 C	37	H17	40	J31 A	38
D1	37	H19	37	J32 B	38
D12	40	J1	33 (2UZ–FE)	L1	40
D13	40	J2 A	33 (2UZ–FE)	S12	39
D14	40	J3 B	33 (2UZ–FE)	S13 A	39
D15	40	J4	38	S14 B	39
E7	37	J7	38	S15 C	39
H12	37	J8 A	38	S28	33 (2UZ–FE)
H13	40	J9 B	38		

: Relay Blocks

Code	See Page	Relay Blocks (Relay Block Location)
2	22	Engine Room R/B (Engine Compartment Left)
4	23	Engine Room R/B No.4 (Engine Compartment Left)

: Junction Block and Wire Harness Connector

Code	See Page	Junction Block and Wire Harness (Connector Location)
1E	24	Engine Room Main Wire and Driver Side J/B (Lower Finish Panel)
1G	25	Instrument Panel Wire and Driver Side J/B (Lower Finish Panel)

: **Connector Joining Wire Harness and Wire Harness**

Code	See Page	Joining Wire Harness and Wire Harness (Connector Location)
IB1	46	Floor No.2 Wire and Engine Room Main Wire (Left Kick Panel)
IB2		
IC2	46	Instrument Panel Wire and Engine Room Main Wire (Left Kick Panel)
IC4		
IC5		
IE1	46	Instrument Panel Wire and Floor No.2 Wire (Left Kick Panel)
IM1	47	Engine Wire and Instrument Panel Wire (Right Side of Blower Unit)
IO3	47	Instrument Panel Wire and Floor Wire (Right Kick Panel)
BC1	48	Frame Wire and Floor No.2 Wire (Under the Rear LH Seat)
BC2		

: **Ground Points**

Code	See Page	Ground Points Location
EB	44 (2UZ–FE)	Front Left Fender
ED	44 (2UZ–FE)	Left Bank Cylinder Head
II	46	Instrument Panel Brace RH
BN	48	Near the No.5 Crossmember of Side Frame LH

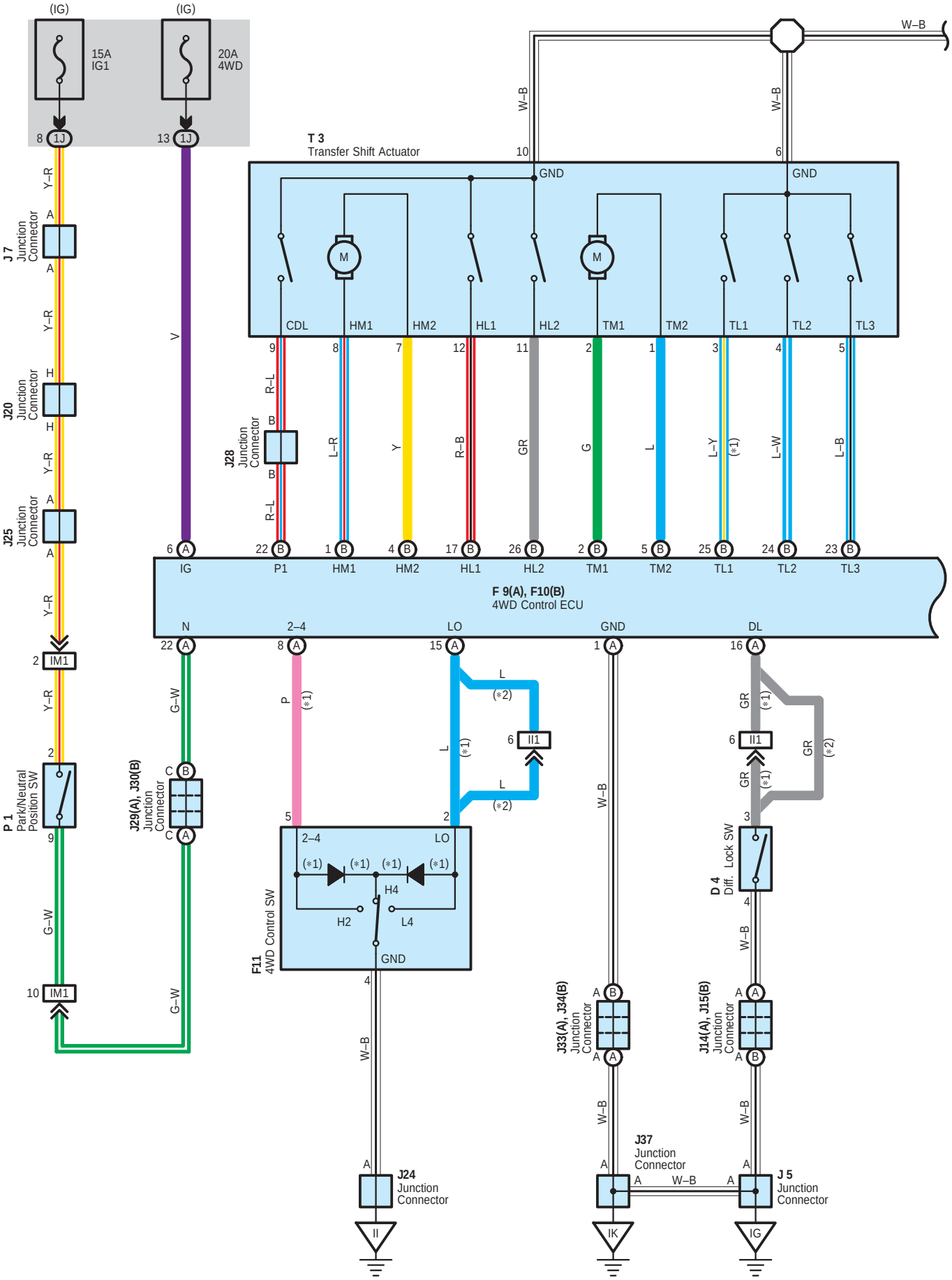
(IG)
(IG)
15A
IG1
20A
4WD
8 1J
13 1J
T 3
Transfer Shift Actuator
W–B
GND
GND
CDL
HM1
HM2
HL1
HL2
TM1
TM2
TL1
TL2
TL3
J 7
Junction
Connector
J20
Junction
Connector
J25
Junction
Connector
J28
Junction
Connector
IG
P1
HM1
HM2
HL1
HL2
TM1
TM2
TL1
TL2
TL3
F 9(A), F10(B)
4WD Control ECU
N
2–4
LO
GND
DL
IM1
IM1
P 1
Park/Neutral
Position SW
J29(A), J30(B)
Junction
Connector
F11
4WD Control SW
H4
H2
L4
GND
J24
Junction
Connector
J33(A), J34(B)
Junction
Connector
J14(A), J15(B)
Junction
Connector
D 4
Diff. Lock SW
J37
Junction
Connector
J 5
Junction
Connector
II
IK
IG

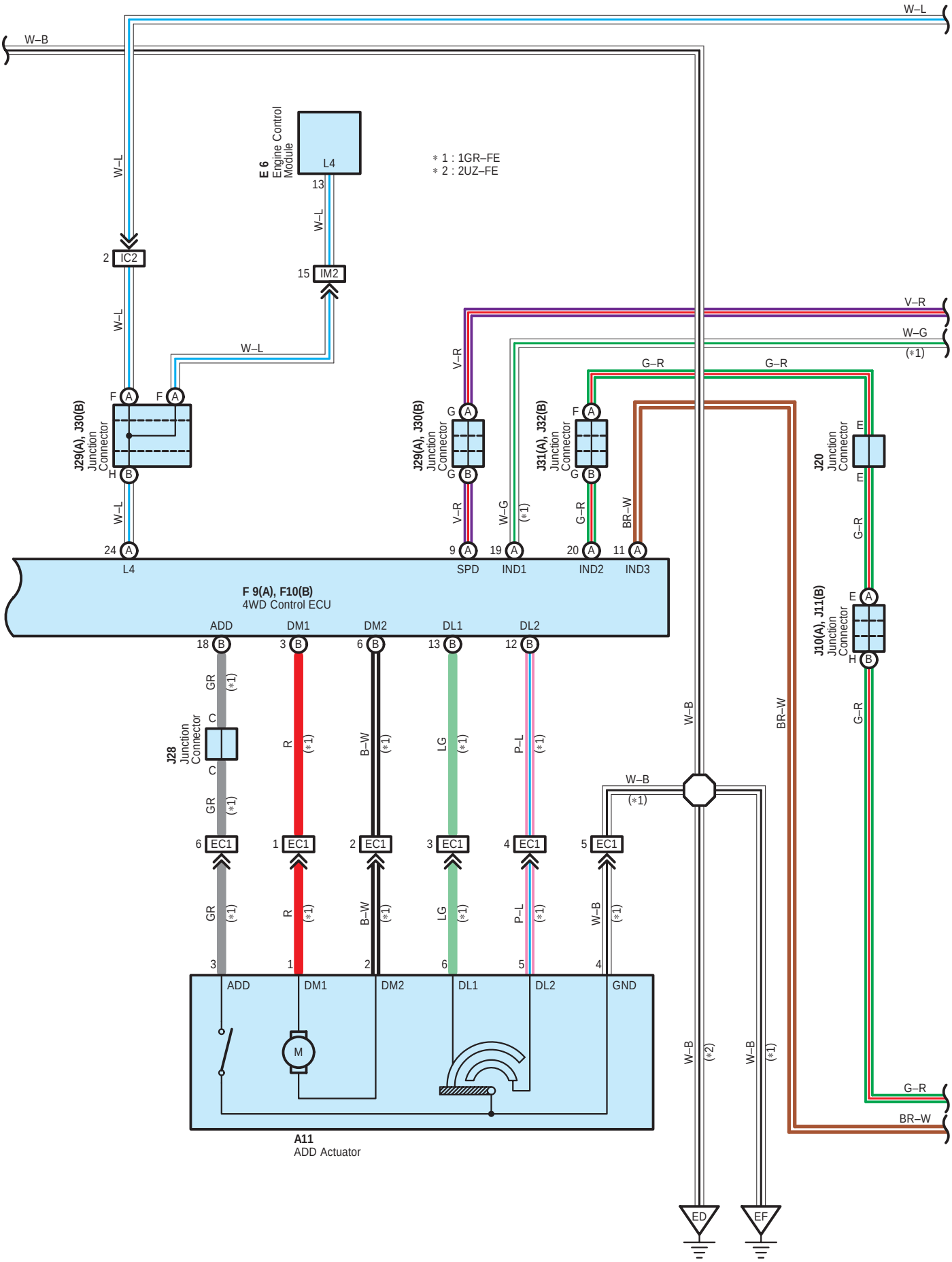
W–L
W–B
E 6
Engine Control Module
L4
13
W–L
15
IM2
2
IC2
W–L
W–L
W–L
＊1 : 1GR–FE
＊2 : 2UZ–FE
V–R
W–G
(＊1)
G–R
G–R
J29(A), J30(B) Junction Connector
F
A
H
B
24
L4
J29(A), J30(B) Junction Connector
G
A
G
B
9
SPD
V–R
W–G
(＊1)
19
IND1
J31(A), J32(B) Junction Connector
F
A
G
B
20
IND2
G–R
BR–W
11
IND3
J20 Junction Connector
E
E
G–R
J10(A), J11(B) Junction Connector
E
A
H
B
G–R
F 9(A), F10(B)
4WD Control ECU
ADD
DM1
DM2
DL1
DL2
18
3
6
13
12
GR
(＊1)
R
(＊1)
B–W
(＊1)
LG
(＊1)
P–L
(＊1)
J28 Junction Connector
C
C
GR
(＊1)
W–B
(＊1)
W–B
BR–W
6
EC1
1
EC1
2
EC1
3
EC1
4
EC1
5
EC1
GR
(＊1)
R
(＊1)
B–W
(＊1)
LG
(＊1)
P–L
(＊1)
W–B
(＊1)
3
1
2
6
5
4
ADD
DM1
DM2
DL1
DL2
GND
M
A11
ADD Actuator
W–B
(＊2)
W–B
(＊1)
ED
EF
G–R
BR–W

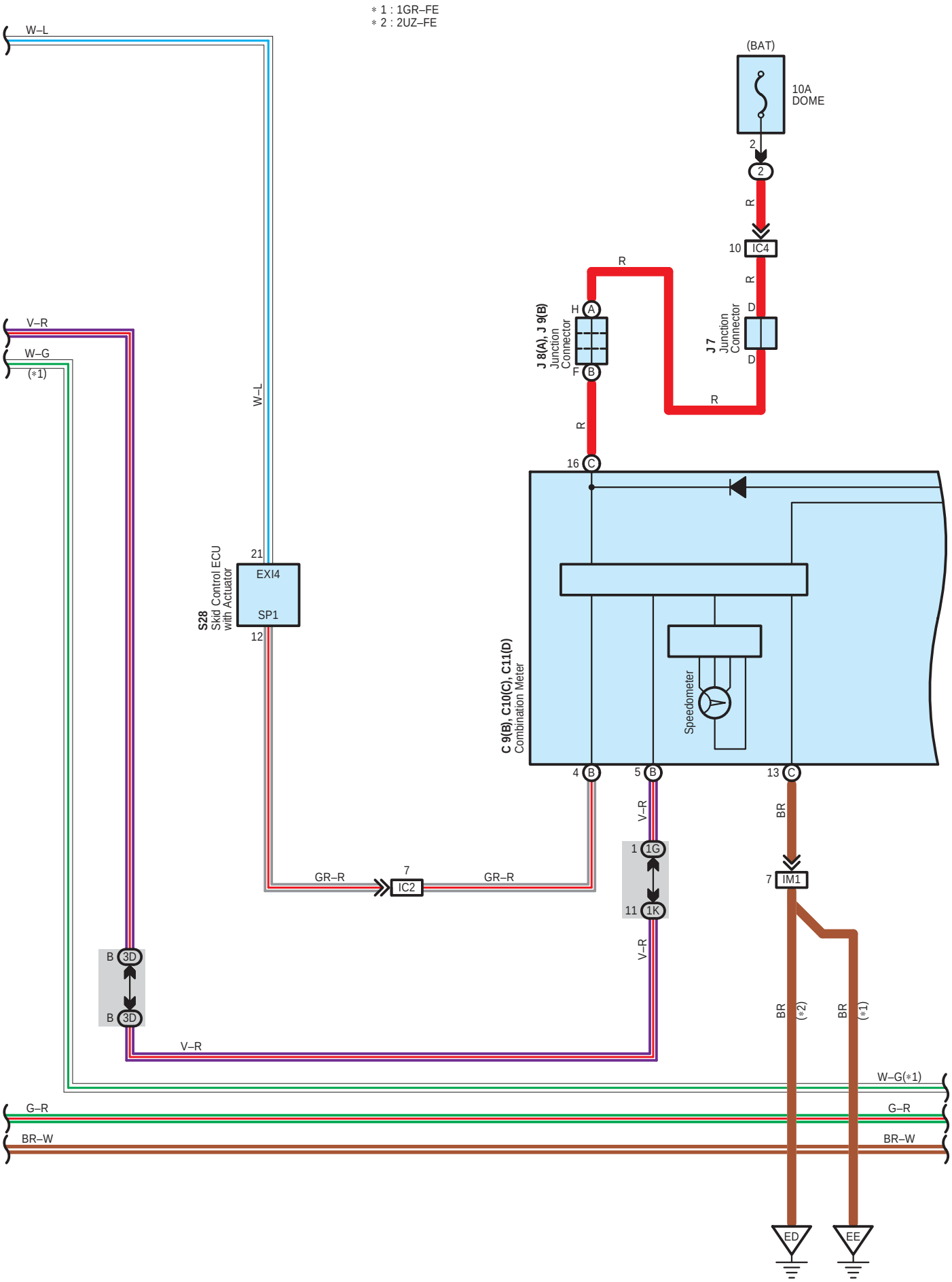
∗ 1 : 1GR–FE
∗ 2 : 2UZ–FE
W–L
(BAT)
10A
DOME
2
2
R
10
IC4
R
R
J 8(A), J 9(B)
Junction
Connector
H
A
F
B
J7
Junction
Connector
D
D
R
R
V–R
W–G
(∗1)
W–L
16
C
21
EXI4
S28
Skid Control ECU
with Actuator
SP1
12
C 9(B), C10(C), C11(D)
Combination Meter
Speedometer
4
B
5
B
13
C
V–R
BR
1
1G
11
1K
7
IM1
GR–R
7
IC2
GR–R
B
3D
B
3D
V–R
V–R
BR
(∗2)
BR
(∗1)
W–G(∗1)
G–R
BR–W
G–R
BR–W
ED
EE

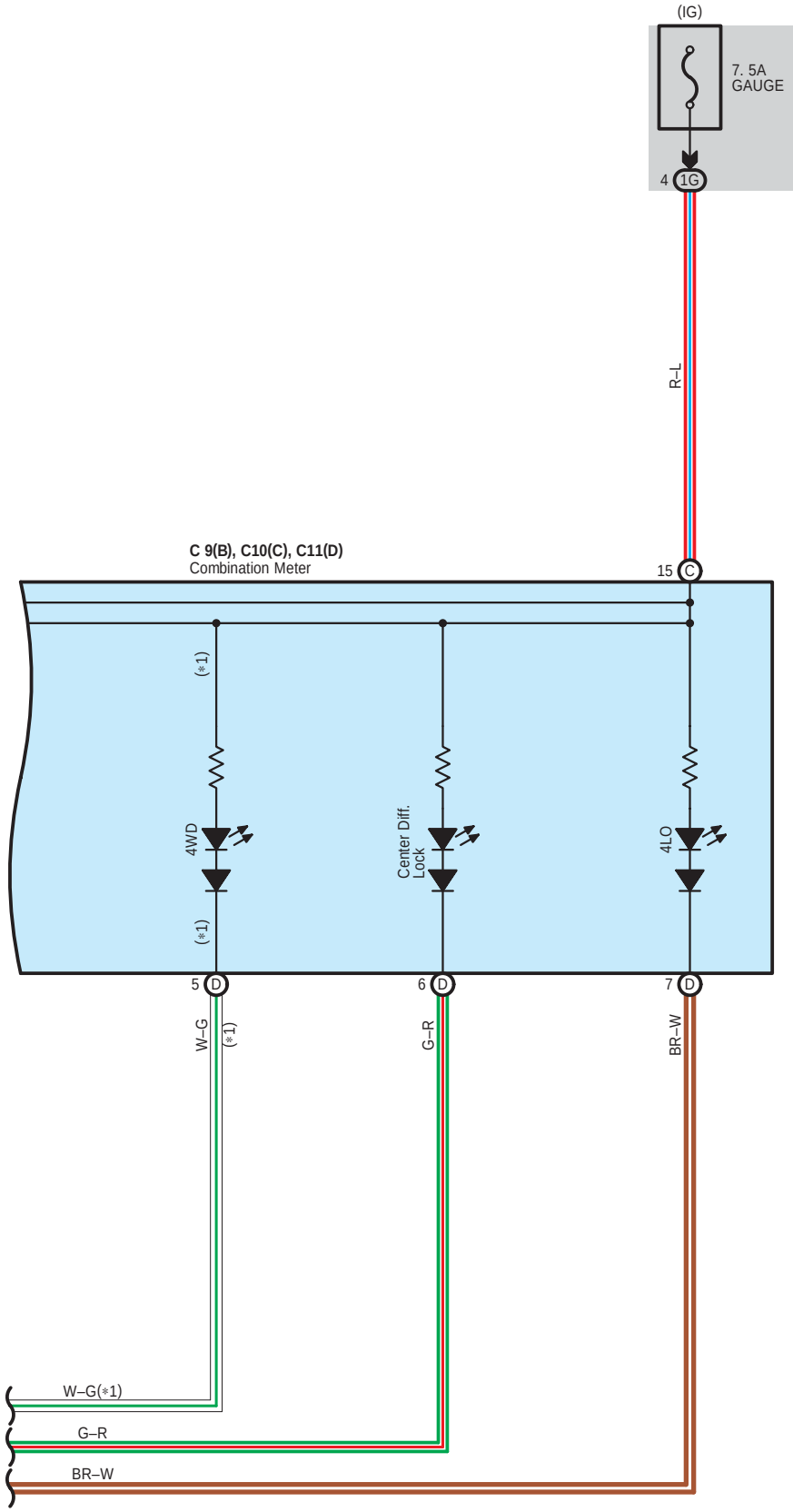
(IG)
7. 5A
GAUGE
4 1G
R–L
C 9(B), C10(C), C11(D)
Combination Meter
15 C
(*1)
4WD
(*1)
Center Diff.
Lock
4LO
5 D
6 D
7 D
W–G
(*1)
G–R
BR–W
W–G(*1)
G–R
BR–W

System Outline

Depending on the transfer shift actuator status and ADD actuator (1GR–FE) status, the 4WD control ECU drives the transfer shift actuator and ADD actuator (1GR–FE) to electrically change the gear position selected by the driver according to vehicle speed signal and neutral start switch signal.

1. Shift Select Control

Shifting from H2 into H4 position (1GR–FE)
When the 4WD control switch is turned from H2 into H4, this signal is input into 4WD control ECU (TERMINAL 2–4). Then, the 4WD control ECU moves the 2–4 select motor (TERMINAL 2, TERMINAL 1) in the transfer shift actuator until the shift fork shaft shifts to the diff. free position, performing a shift into H4 position

Switching diff. lock ON when in H4 position.
When the diff. lock switch is turned ON with the 4WD control switch in H4 position, this signal is input into the 4WD control ECU (TERMINAL DL). Then, the 4WD control ECU drives the 2–4 select motor (TERMINAL 2, TERMINAL 1) in the transfer shift actuator until the shift fork shaft shifts to the diff. lock position, locking it in H4 position with the diff. lock.

Shifting from H4 into L4 position
When the 4WD control switch is turned from H4 into L4, this signal is input into 4WD control ECU (TERMINAL LO). Then, the 4WD control ECU drives the H–L select motor (TERMINAL 8, TERMINAL 7) in the transfer shift actuator, shifting the shift fork shaft, performing a shift into L4 position.

Switching diff. lock ON when in L4 position.
When the diff. lock switch is turned ON with the 4WD control switch in L4 position, this signal is input into the 4WD control ECU (TERMINAL DL). Then, the 4WD control ECU drives the 2–4 select motor (TERMINAL 2, TERMINAL 1) in the transfer shift actuator until the shift fork shaft shifts to the diff. lock position, locking it in L4 position with the diff. lock.

2. Function of Limit Switch

H4L limit switch (TERMINAL 12 and TERMINAL 11 of transfer shift actuator)
The H4L limit switch in the transfer shift actuator feeds back the current shift position status (H4 or L4) information, which is based on the ON/OFF combination of the two switches, to the 4WD control ECU.

4WD limit switch (TERMINAL 3 (1GR–FE), TERMINAL 4 and TERMINAL 5 of transfer shift actuator)
The 4WD limit switch in the transfer shift actuator feeds back the current shift position status (H2 or H4) (1GR–FE) and diff. lock or diff. free status information, which is based on the ON/OFF combination of the two (2UZ–FE) or three (1GR–FE) switches, to the 4WD control ECU.

ADD limit switch (TERMINAL 6 and TERMINAL 5 of ADD actuator) (1GR–FE)
The ADD limit switch in the ADD actuator feeds back the current front diff. lock or free status information, which is based on the ON/OFF combination of the two switches, to the 4WD control ECU.

3. Shift Limit Control

The 4WD control ECU interrupts the shift select control and gives the driver a warning by means of buzzer (Integrated into the ECU) sound and blinking indicator light on the combination meter when the following shift change conditions exist.
The warning, however, can be canceled when the 4WD control switch is canceled and the switch position is returned to the original position before the warning occurred.

* Shift change (1GR–FE) from H2 into H4 with vehicle traveling at a speed reaching or exceeding 100 km/h (Buzzer sound and blinking 4WD and center diff. lock indicator lights)
* Shift change from H4 into L4 with vehicle traveling at a speed reaching or exceeding 5 km/h but with the A/T shift position N range (Buzzer sound and blinking L4 indicator light)

4. ADD Actuator Control (1GR–FE)

When switching over between H2 (2WD) and H4 (4WD), the 4WD control ECU controls the way in which power is supplied to the ADD motor in the ADD actuator, as shown below, to run the ADD motor in normal or reverse direction, thereby changing the status of the front diff. from free to lock, or vice versa.

For locking front diff.	TERMINAL DM1	+B
	TERMINAL DM2	GROUND
For unlocking front diff.	TERMINAL DM1	GROUND
	TERMINAL DM2	+B

: Parts Location

Code	See Page	Code	See Page	Code	See Page
A11	34 (1GR–FE)	J9 B	38	J32 B	38
C9 B	37	J10 A	38	J33 A	38
C10 C	37	J11 B	38	J34 B	38
C11 D	37	J14 A	38	J37	38
D4	37	J15 B	38	P1	33 (2UZ–FE)
E6	37	J20	38		35 (1GR–FE)
F9 A	37	J24	38	S28	33 (2UZ–FE)
F10 B	37	J25	38		35 (1GR–FE)
F11	37	J28	38	T3	33 (2UZ–FE)
J5	38	J29 A	38		35 (1GR–FE)
J7	38	J30 B	38		
J8 A	38	J31 A	38		

: Relay Blocks

Code	See Page	Relay Blocks (Relay Block Location)
2	22	Engine Room R/B (Engine Compartment Left)

: Junction Block and Wire Harness Connector

Code	See Page	Junction Block and Wire Harness (Connector Location)
1G	25	Instrument Panel Wire and Driver Side J/B (Lower Finish Panel)
1J		
1K		
3D	28	Instrument Panel Wire and Center J/B (Instrument Panel Brace RH)

: Connector Joining Wire Harness and Wire Harness

Code	See Page	Joining Wire Harness and Wire Harness (Connector Location)
EC1	45 (1GR–FE)	Engine Wire and Differential Wire (Near the Front Differential)
IC2	46	Instrument Panel Wire and Engine Room Main Wire (Left Kick Panel)
IC4		
II1	46	Instrument Panel Wire and Instrument Panel Wire (Instrument Panel Brace LH)
IM1	47	Engine Wire and Instrument Panel Wire (Right Side of Blower Unit)
IM2		

: Ground Points

Code	See Page	Ground Points Location
ED	44 (2UZ–FE)	Left Bank Cylinder Head
EE	44 (2UZ–FE)	Rear Side of Cylinder Block
	45 (1GR–FE)	Rear Side of Right Bank Cylinder Block
EF	45 (1GR–FE)	Rear Side of Left Bank Cylinder Block
IG	46	Left Kick Panel
II	46	Instrument Panel Brace RH
IK	46	Right Kick Panel

NOTICE: When inspecting or repairing the SRS, perform service in accordance with the following precautionary instructions and the procedure, and precautions in the Repair Manual applicable for the model year.

- Malfunction symptoms of the SRS are difficult to confirm, so the DTCs become the most important source of information when troubleshooting. When troubleshooting the SRS, always inspect the DTCs before disconnecting the battery.
- **Work must be started more than 90 seconds after the ignition SW is turned to the "LOCK" position and the negative (–) terminal cable is disconnected from the battery.**
  (The SRS is equipped with a back–up power source so that if work is started within 90 seconds from disconnecting the negative (–) terminal cable of the battery, the SRS may deploy.)
- When the negative (–) terminal cable is disconnected from the battery, the memory of the clock and audio system will be cleared. So before starting work, make a record of the contents in the audio memory system. When work is finished, reset the audio systems as they were before and adjust the clock. Some vehicles have power tilt steering, power telescopic steering, power seat and power outside rear view mirror which are all equipped with memory function. However, it is not possible to make a record of these memory contents. So when the work is finished, it will be necessary to explain it to your customer, and ask the customer to adjust the features and reset the memory. To avoid erasing the memory in each system, never use a back–up power supply from outside the vehicle.
- Before repair, remove the airbag sensor if shocks are likely to be applied to the sensor during repair.
- Do not expose the following parts directly to hot air or flame;
- Even in cases of a minor collision where the SRS does not deploy, the following parts should be inspected;
- Never use SRS parts from another vehicle. When replacing parts, replace with new parts.
- For the purpose of reuse, never disassemble and repair the following parts.
- If the following parts have been dropped, or have cracks, dents and other defects in their case, bracket, and connector, replace with new one.
- Use a volt/ohmmeter with high impedance (10 kΩ/V minimum) for troubleshooting electrical circuits of the system.
- Information labels are attached to the periphery of the SRS components. Follow the instructions of the notice.
- After work on the SRS is completed, check the SRS warning light.
- If the vehicle is equipped with a mobile communication system, refer to the precaution in the IN section of the Repair Manual.

* Steering wheel pad
* Front passenger airbag assembly
* Side airbag assembly
* Curtain shield airbag assembly
* Seat belt pretensioner
* Center airbag sensor assembly
* Front airbag sensor assembly
* Side airbag sensor assembly
* Rear airbag sensor assembly

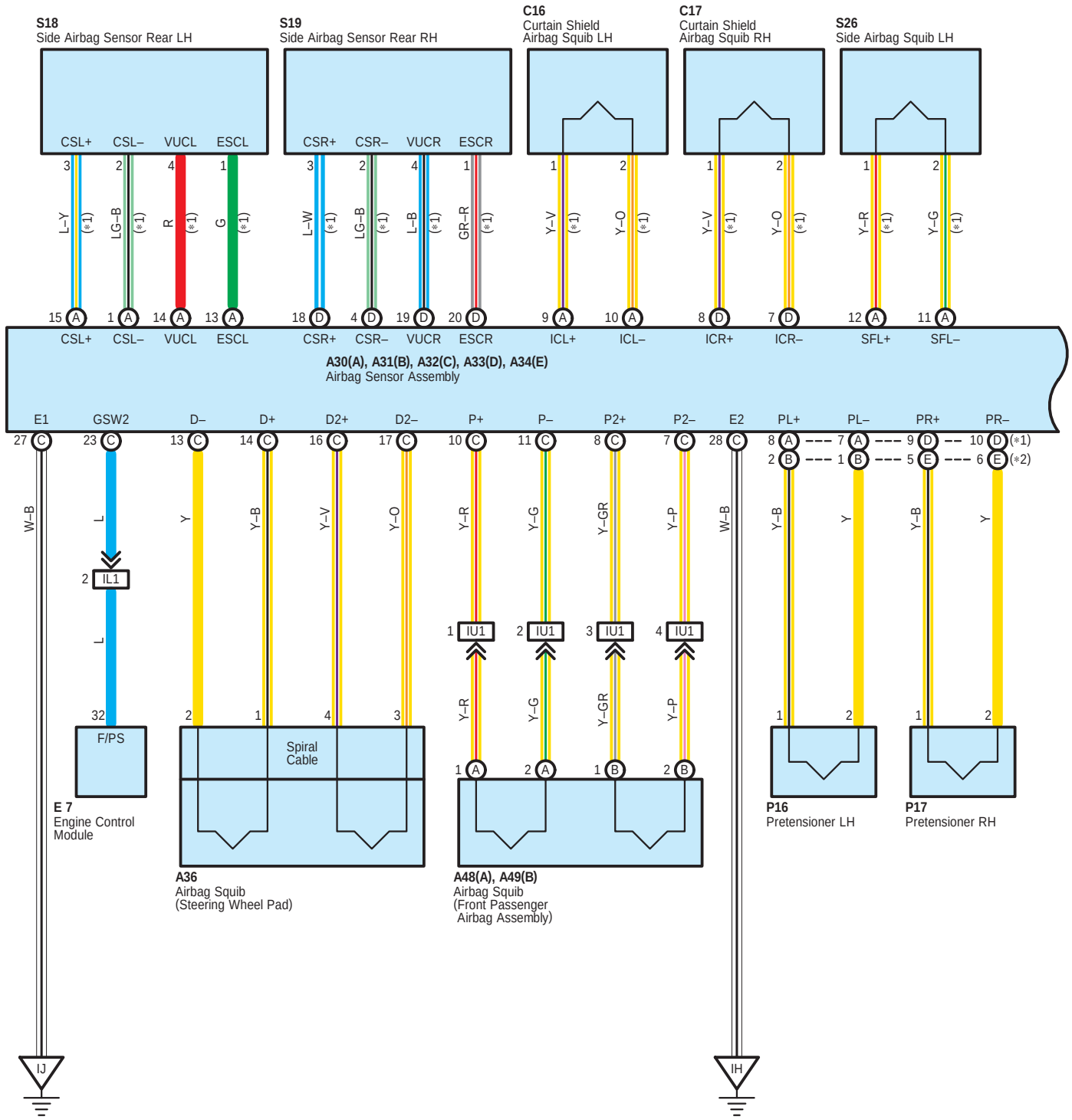
S18
Side Airbag Sensor Rear LH
S19
Side Airbag Sensor Rear RH
C16
Curtain Shield
Airbag Squib LH
C17
Curtain Shield
Airbag Squib RH
S26
Side Airbag Squib LH
CSL+ CSL– VUCL ESCL
CSR+ CSR– VUCR ESCR
L–Y LG–B R G
L–W LG–B L–B GR–R
Y–V Y–O
Y–V Y–O
Y–R Y–G
(*1)
CSL+ CSL– VUCL ESCL CSR+ CSR– VUCR ESCR ICL+ ICL– ICR+ ICR– SFL+ SFL–
A30(A), A31(B), A32(C), A33(D), A34(E)
Airbag Sensor Assembly
E1 GSW2 D– D+ D2+ D2– P+ P– P2+ P2– E2 PL+ PL– PR+ PR–
W–B L Y Y–B Y–V Y–O Y–R Y–G Y–GR Y–P W–B Y–B Y Y–B Y
(*1) (*2)
IL1
IU1
F/PS
Spiral Cable
E 7
Engine Control Module
A36
Airbag Squib
(Steering Wheel Pad)
A48(A), A49(B)
Airbag Squib
(Front Passenger Airbag Assembly)
P16
Pretensioner LH
P17
Pretensioner RH
IJ
IH

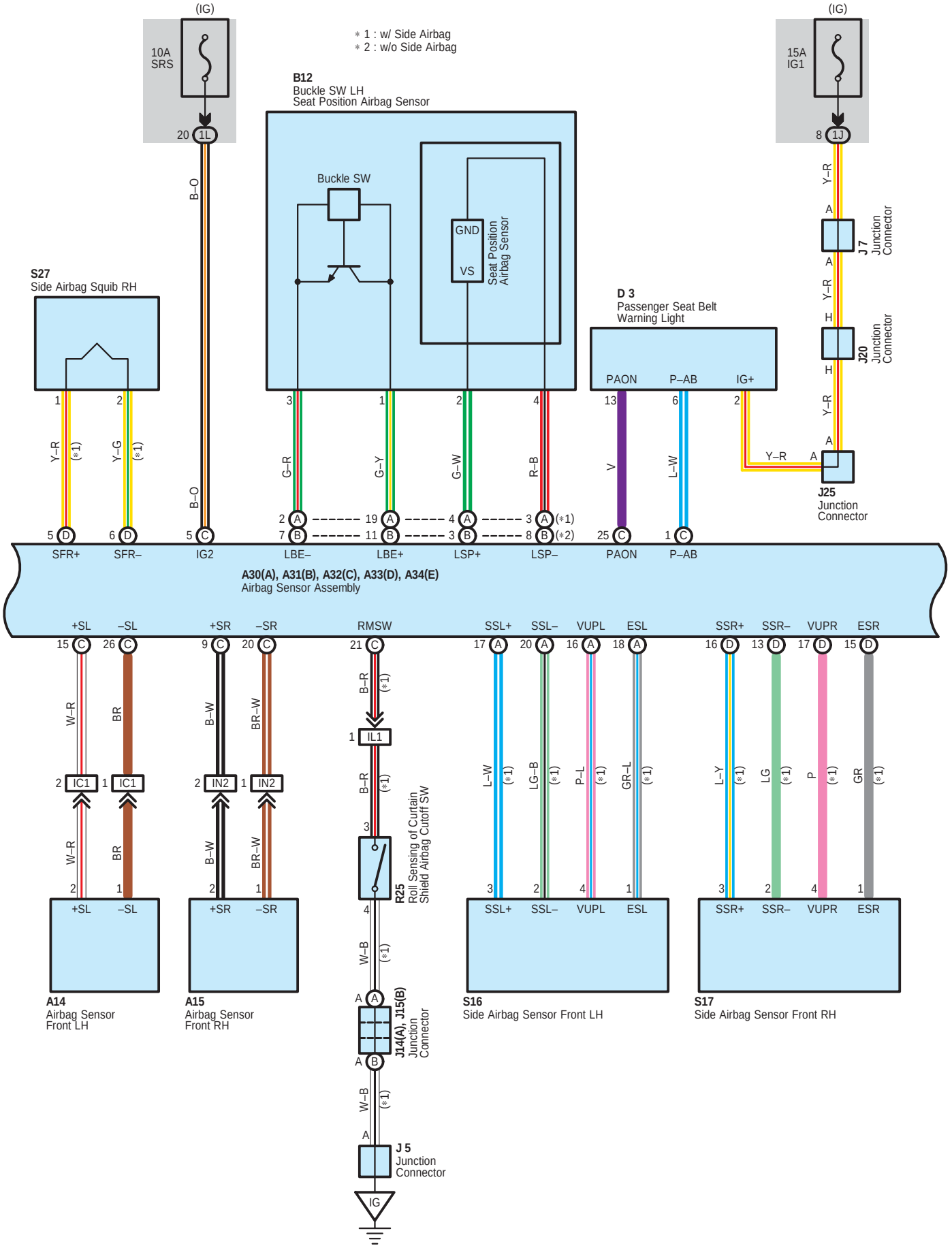
(IG)
10A
SRS
20 1L
B–O
B–O
5 C
IG2
＊1 : w/ Side Airbag
＊2 : w/o Side Airbag
B12
Buckle SW LH
Seat Position Airbag Sensor
Buckle SW
GND
VS
Seat Position
Airbag Sensor
S27
Side Airbag Squib RH
1
2
Y–R
(＊1)
Y–G
(＊1)
5 D
6 D
SFR+
SFR–
3
1
2
4
G–R
G–Y
G–W
R–B
2 A
7 B
19 A
11 B
4 A
3 B
3 A
8 B
(＊1)
(＊2)
LBE–
LBE+
LSP+
LSP–
D 3
Passenger Seat Belt
Warning Light
PAON
P–AB
IG+
13
6
2
V
L–W
Y–R
25 C
1 C
PAON
P–AB
(IG)
15A
IG1
8 1J
Y–R
A
J 7
Junction
Connector
A
Y–R
H
J20
Junction
Connector
H
Y–R
A
Y–R
A
J25
Junction
Connector
A30(A), A31(B), A32(C), A33(D), A34(E)
Airbag Sensor Assembly
+SL
–SL
+SR
–SR
RMSW
SSL+
SSL–
VUPL
ESL
SSR+
SSR–
VUPR
ESR
15 C
26 C
9 C
20 C
21 C
17 A
20 A
16 A
18 A
16 D
13 D
17 D
15 D
W–R
BR
B–W
BR–W
B–R
(＊1)
1 IL1
B–R
(＊1)
3
R25
Roll Sensing of Curtain
Shield Airbag Cutoff SW
4
W–B
(＊1)
L–W
LG–B
P–L
GR–L
L–Y
LG
P
GR
2 IC1
1 IC1
2 IN2
1 IN2
2
1
3
2
4
1
+SL
–SL
+SR
–SR
SSL+
SSL–
VUPL
ESL
SSR+
SSR–
VUPR
ESR
A14
Airbag Sensor
Front LH
A15
Airbag Sensor
Front RH
S16
Side Airbag Sensor Front LH
S17
Side Airbag Sensor Front RH
A A
A B
J14(A), J15(B)
Junction
Connector
W–B
(＊1)
A
J 5
Junction
Connector
IG

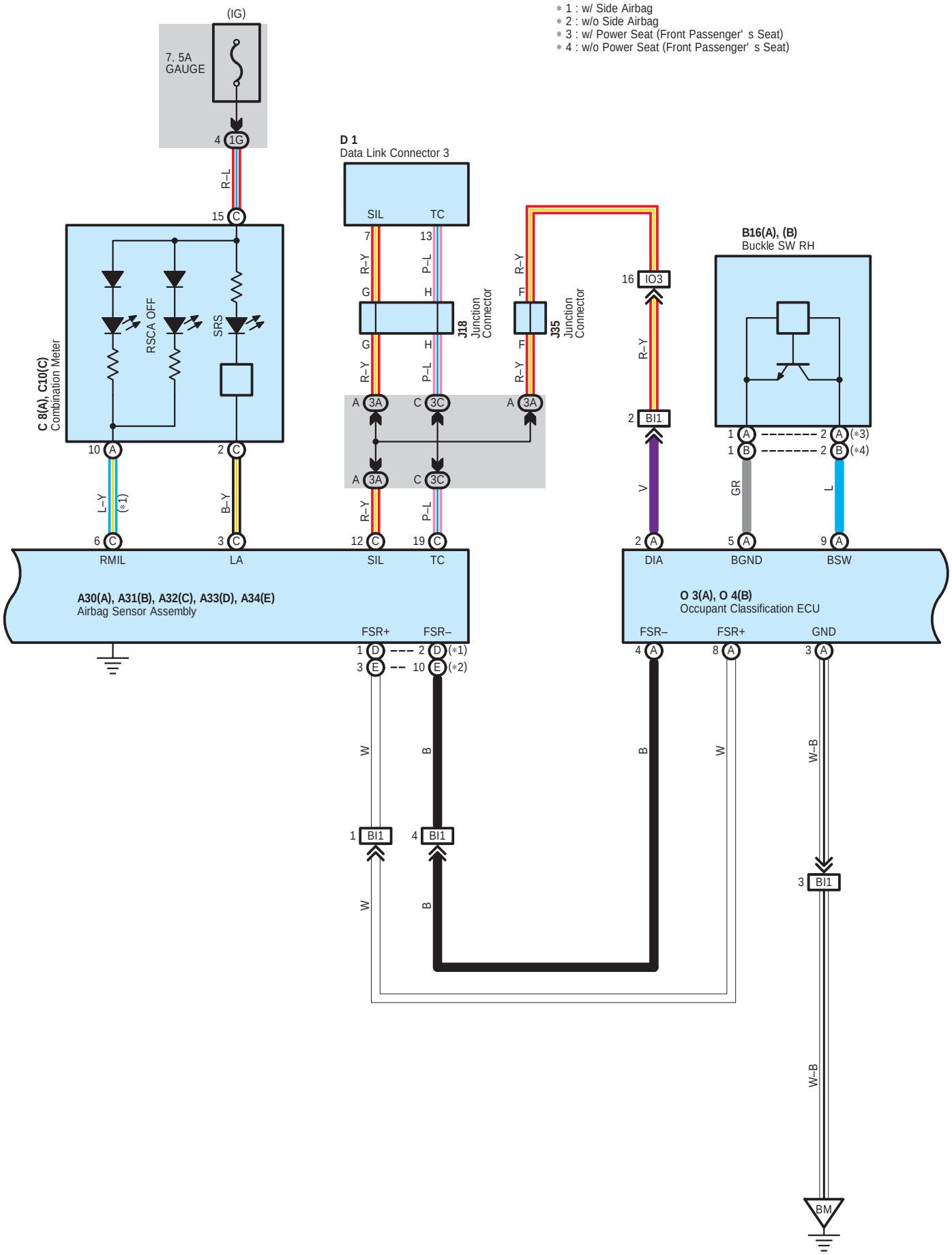
∗ 1 : w/ Side Airbag
∗ 2 : w/o Side Airbag
∗ 3 : w/ Power Seat (Front Passenger' s Seat)
∗ 4 : w/o Power Seat (Front Passenger' s Seat)
(IG)
7. 5A
GAUGE
4 1G
R–L
15 C
C 8(A), C10(C)
Combination Meter
RSCA OFF
SRS
10 A
2 C
L–Y
(∗1)
B–Y
6 C
3 C
RMIL
LA
D 1
Data Link Connector 3
SIL
TC
7
13
R–Y
P–L
G
H
J18
Junction
Connector
A 3A
C 3C
12 C
19 C
SIL
TC
J35
Junction
Connector
F
16 IO3
2 BI1
V
2 A
DIA
B16(A), (B)
Buckle SW RH
1 A
1 B
2 A
2 B
(∗3)
(∗4)
GR
L
5 A
9 A
BGND
BSW
A30(A), A31(B), A32(C), A33(D), A34(E)
Airbag Sensor Assembly
FSR+
FSR–
1 D
3 E
2 D
10 E
(∗1)
(∗2)
O 3(A), O 4(B)
Occupant Classification ECU
FSR–
FSR+
GND
4 A
8 A
3 A
W
B
1 BI1
4 BI1
W–B
3 BI1
BM

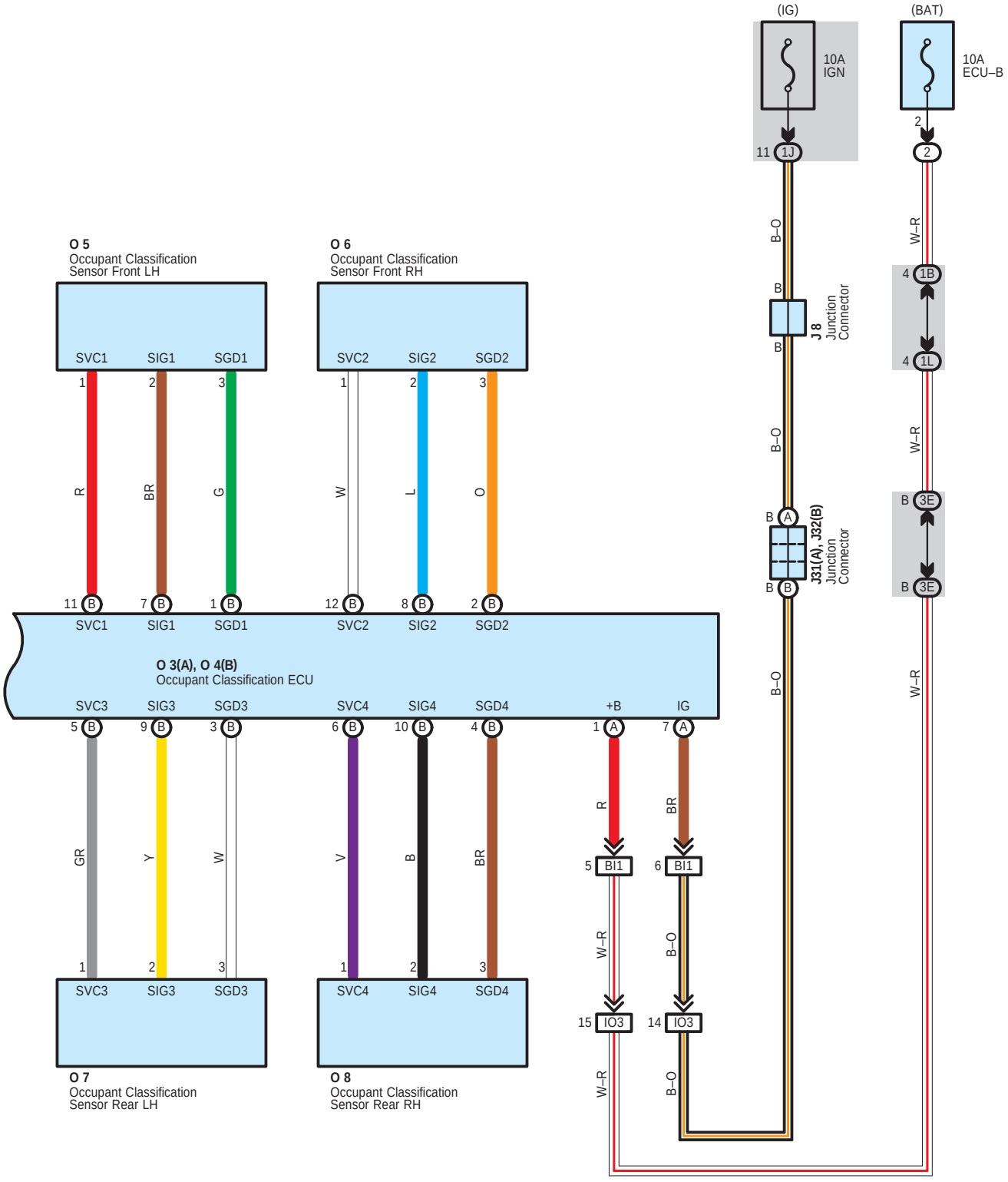
(IG)
10A
IGN
(BAT)
10A
ECU–B
11 1J
2
2
B–O
W–R
B
J 8
Junction
Connector
B
4 1B
4 1L
B–O
W–R
B A
J31(A), J32(B)
Junction
Connector
B B
B 3E
B 3E
B–O
W–R
O 5
Occupant Classification
Sensor Front LH
O 6
Occupant Classification
Sensor Front RH
SVC1 SIG1 SGD1
SVC2 SIG2 SGD2
1 2 3
1 2 3
R BR G
W L O
11 B 7 B 1 B
12 B 8 B 2 B
SVC1 SIG1 SGD1
SVC2 SIG2 SGD2
O 3(A), O 4(B)
Occupant Classification ECU
SVC3 SIG3 SGD3 SVC4 SIG4 SGD4 +B IG
5 B 9 B 3 B
6 B 10 B 4 B
1 A 7 A
GR Y W
V B BR
R BR
5 BI1 6 BI1
W–R B–O
15 IO3 14 IO3
W–R B–O
1 2 3
1 2 3
SVC3 SIG3 SGD3
SVC4 SIG4 SGD4
O 7
Occupant Classification
Sensor Rear LH
O 8
Occupant Classification
Sensor Rear RH

System Outline

* The system reaches an ignition judgment to deploy the following device based on the signals received from the front airbag sensor and deceleration sensor.
  – Driver Airbag
  – Front Passenger Airbag
  – Seat Belt Pretensioner
* The system reaches an ignition judgment to deploy the following device based on the signals received from the side airbag sensors.
  – Side Airbags
  – Curtain Shield Airbags
* The dual–stage SRS airbag system has been used for the driver and front passenger airbags. This system controls the optimal airbag inflation by judging the extent of impact, seat position (driver seat), whether or not the seat belt is fastened (driver seat) and information from the front passenger occupant classification system.
* The front passenger occupant classification system judges whether the front passenger seat is occupied by an adult or child (with child seat) or is unoccupied, according to the load applied to the front passenger seat and whether the seat belt is buckled. Based on the results, it restricts the deployment of the front passenger airbag, front passenger side airbag, and front passenger seat belt pretensioner. In addition, the system informs the driver of the result of the judgment through the use of the AIRBAG ON/OFF indicator lights.
* A Roll Sensing Curtain Shield Airbag system has been adopted in order to deploy the curtain shield airbags and the pretensioners, in the event that the vehicle rolls over.
* A Roll Sensing Curtain Shield Airbag cutoff SW is provided near the driver side to enable the driver to disable this system.
* The airbag sensor assembly transmits a signal to the engine control module in order to stop the fuel pump when the airbag is deployed.

○ : Parts Location

Code	See Page	Code	See Page	Code	See Page
A14	32 (2UZ–FE)	C16	40	O5	42 (*1)
	34 (1GR–FE)	C17	40		43 (*2)
A15	32 (2UZ–FE)	D1	37	O6	42 (*1)
	34 (1GR–FE)	D3	37		43 (*2)
A30 A	36	E7	37	O7	42 (*1)
A31 B	36	J5	38		43 (*2)
A32 C	36	J7	38	O8	42 (*1)
A33 D	36	J8	38		43 (*2)
A34 E	36	J14 A	38	P16	41
A36	36	J15 B	38	P17	41
A48 A	36	J18	38	R25	39
A49 B	36	J20	38	S16	41
B12	42 (*1)	J25	38	S17	41
	43 (*2)	J31 A	38	S18	41
B16 A	42 (*1)	J32 B	38	S19	41
	43 (*2)	J35	38	S26	42 (*1)
B	42 (*1)	O3 A	42 (*1)		43 (*2)
	43 (*2)		43 (*2)	S27	42 (*1)
C8 A	37	O4 B	42 (*1)		43 (*2)
C10 C	37		43 (*2)		

⬭ : Relay Blocks

Code	See Page	Relay Blocks (Relay Block Location)
2	22	Engine Room R/B (Engine Compartment Left)

* 1 : Power Seat * 2 : Manual Seat

: **Junction Block and Wire Harness Connector**

Code	See Page	Junction Block and Wire Harness (Connector Location)
1B	24	Engine Room Main Wire and Driver Side J/B (Lower Finish Panel)
1G	25	Instrument Panel Wire and Driver Side J/B (Lower Finish Panel)
1J		
1L		
3A	28	Instrument Panel Wire and Center J/B (Instrument Panel Brace RH)
3C		
3E		

: **Connector Joining Wire Harness and Wire Harness**

Code	See Page	Joining Wire Harness and Wire Harness (Connector Location)
IC1	46	Instrument Panel Wire and Engine Room Main Wire (Left Kick Panel)
IL1	47	Instrument Panel Wire and Instrument Panel Wire (Right Upper Side of the Glove Box)
IN2	47	Instrument Panel Wire and Engine Room Main Wire (Right Kick Panel)
IO3	47	Instrument Panel Wire and Floor Wire (Right Kick Panel)
IU1	47	Instrument Panel Wire and Instrument Panel Wire Assembly (Right Upper Side of the Glove Box)
BI1	50 (*1)	Floor Wire and Seat No.1 Wire (Under the Front RH Seat)
	51 (*2)	

: **Ground Points**

Code	See Page	Ground Points Location
IG	46	Left Kick Panel
IH	46	Instrument Panel Brace LH
IJ	46	Instrument Panel Brace RH
BM	48	Floor Seat Crossmember RH

* 1 : Power Seat * 2 : Manual Seat

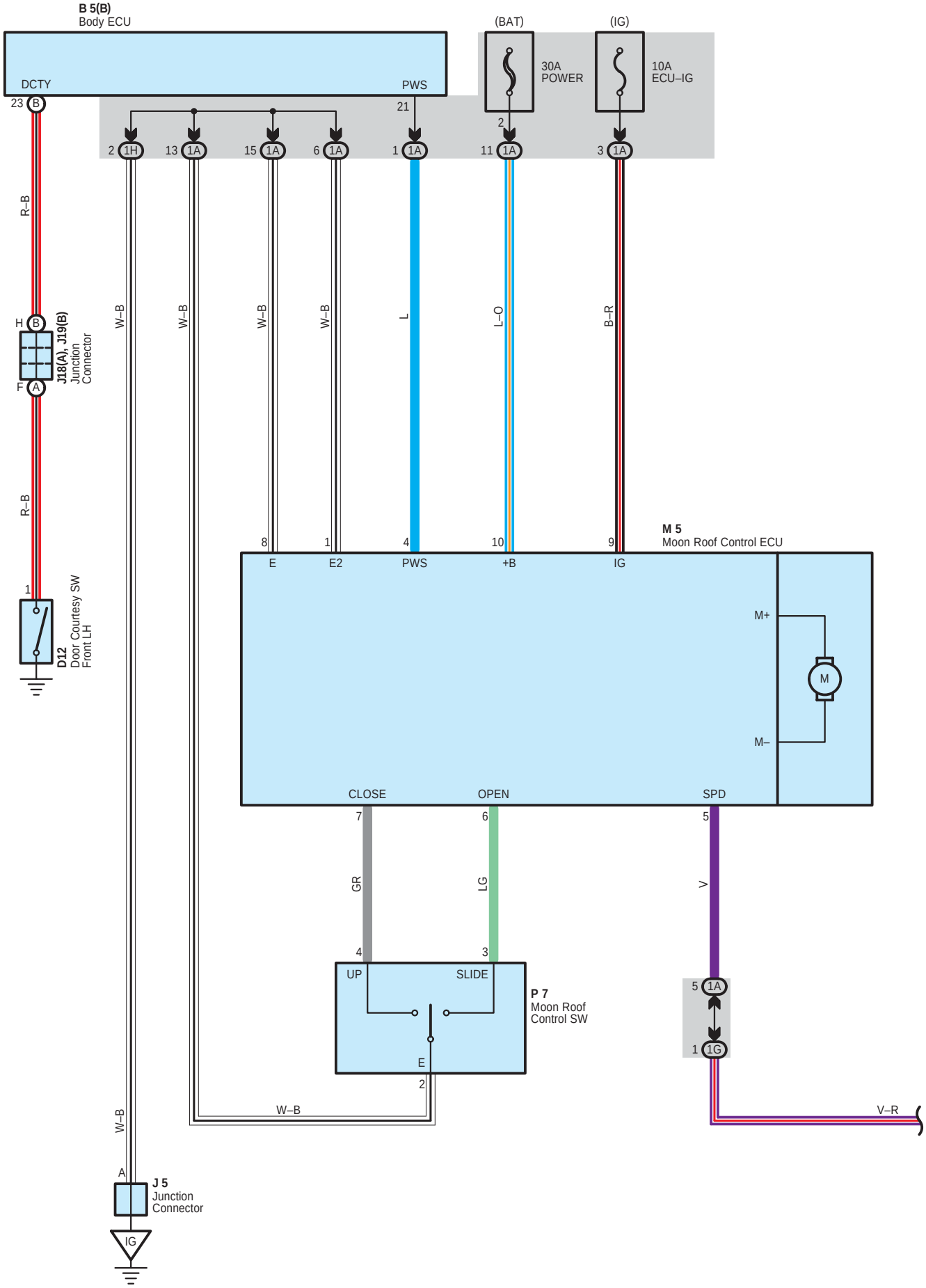
B 5(B)
Body ECU
DCTY
PWS
23 B
21
(BAT)
(IG)
30A
POWER
10A
ECU–IG
2
2 1H
13 1A
15 1A
6 1A
1 1A
11 1A
3 1A
R–B
W–B
W–B
W–B
W–B
L
L–O
B–R
H B
F A
J18(A), J19(B)
Junction
Connector
R–B
1
D12
Door Courtesy SW
Front LH
M 5
Moon Roof Control ECU
8
1
4
10
9
E
E2
PWS
+B
IG
M+
M
M–
CLOSE
OPEN
SPD
7
6
5
GR
LG
V
4
3
UP
SLIDE
E
2
P 7
Moon Roof
Control SW
5 1A
1 1G
W–B
V–R
A
J 5
Junction
Connector
IG

* 1 : 2UZ–FE
* 2 : 1GR–FE

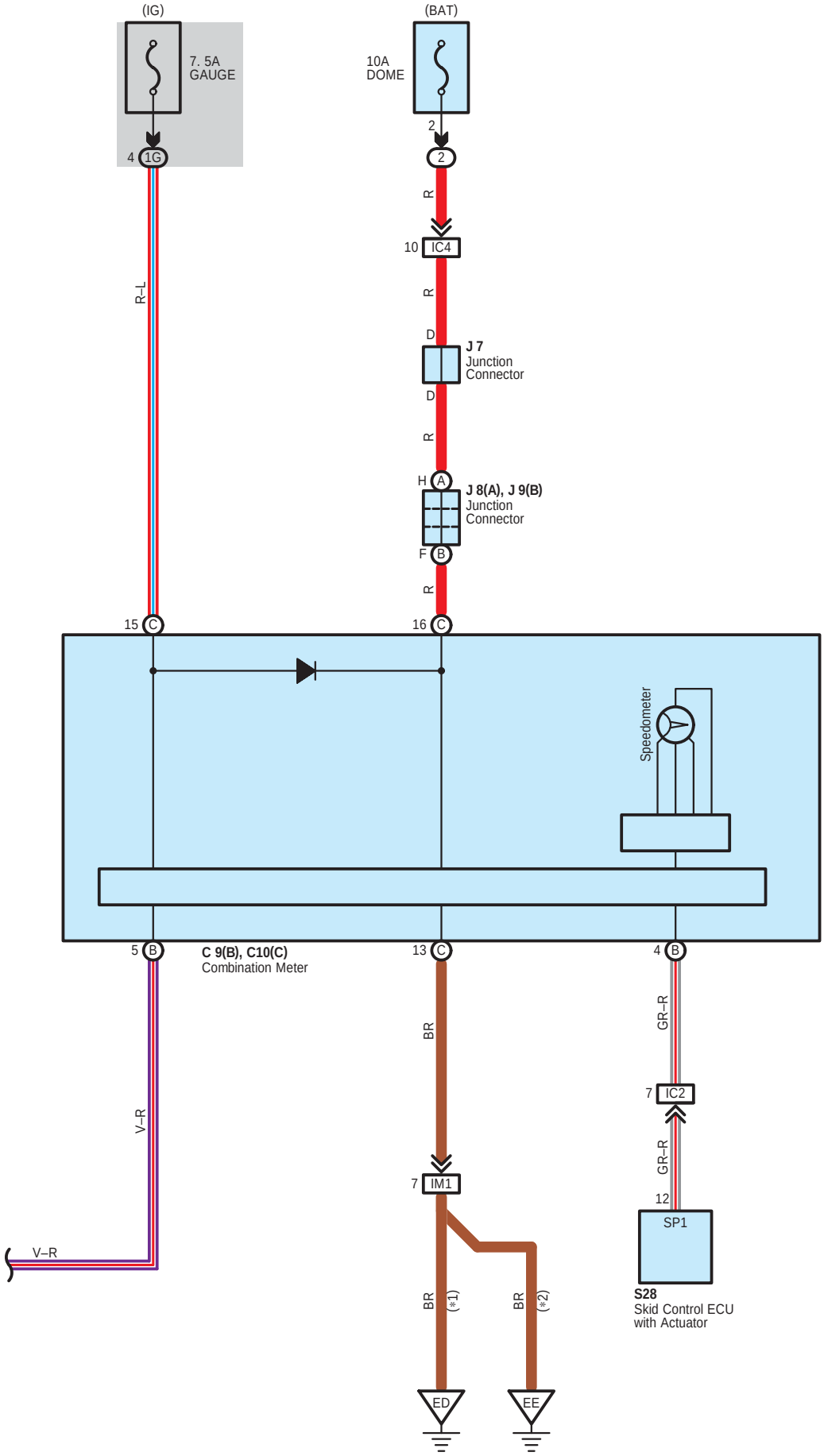

Moon Roof

System Outline

Current is always applied from the POWER fuse to TERMINAL 10 of the moon roof control ECU. With the ignition SW turned on, the current flows to TERMINAL 9 of the moon roof control ECU.

1. Moon Roof Open/Close Operation

For moon roof operation, there are moon roof control switches: ”Slide open/tilt down”; and ”Slide close/tilt up.” When a switch is pressed and held down for a certain period of time, one touch automatic operation takes place in accordance with the function of the switch.

2. Key–Off Operation

Roof remains operable – until about 45 seconds elapse after the ignition SW is turned from ON to OFF or until the driver’s seat door is opened and closed, whichever first occurs.
However, if an overload reverse operation was going on at that time, the key–off operation continues until it comes to an end.

3. Overload Reverse Operation

The moon roof control ECU detects jamming of the moon roof by foreign material, if occurred, from abnormal motor speed signal and reverses the moon roof operation.

4. Deflector Control Function

When the roof is slid fully open, the moon roof control ECU automatically adjusts the height of deflector in accordance with the vehicle cruising speed.

* When the battery terminal or fuse is disconnected, the roof position has to be reset to its initial position by the moon roof control SW in accordance with the following procedure:

(1) Reconnect the battery terminal or fuse.

(2) Turn ON the ignition switch.

(3) Operate the moon roof control SW to open the roof halfway or more.

(4) Then operate the moon roof control SW to fully close the roof.
Do not release the switch for at least one second after the roof is fully closed.

: Parts Location

Code		See Page	Code		See Page	Code	See Page
B5	B	36	J7		38	M5	41
C9	B	37	J8	A	38	P7	41
C10	C	37	J9	B	38	S28	33 (2UZ–FE)
D12		40	J18	A	38		35 (1GR–FE)
J5		38	J19	B	38		

: Relay Blocks

Code	See Page	Relay Blocks (Relay Block Location)
2	22	Engine Room R/B (Engine Compartment Left)

: Junction Block and Wire Harness Connector

Code	See Page	Junction Block and Wire Harness (Connector Location)
1A	24	Roof Wire and Driver Side J/B (Lower Finish Panel)
1G	25	Instrument Panel Wire and Driver Side J/B (Lower Finish Panel)
1H		

: Connector Joining Wire Harness and Wire Harness

Code	See Page	Joining Wire Harness and Wire Harness (Connector Location)
IC2	46	Instrument Panel Wire and Engine Room Main Wire (Left Kick Panel)
IC4		
IM1	47	Engine Wire and Instrument Panel Wire (Right Side of Blower Unit)

▽ : **Ground Points**

Code	See Page	Ground Points Location
ED	44 (2UZ–FE)	Left Bank Cylinder Head
EE	44 (2UZ–FE)	Rear Side of Cylinder Block
	45 (1GR–FE)	Rear Side of Right Bank Cylinder Block
IG	46	Left Kick Panel

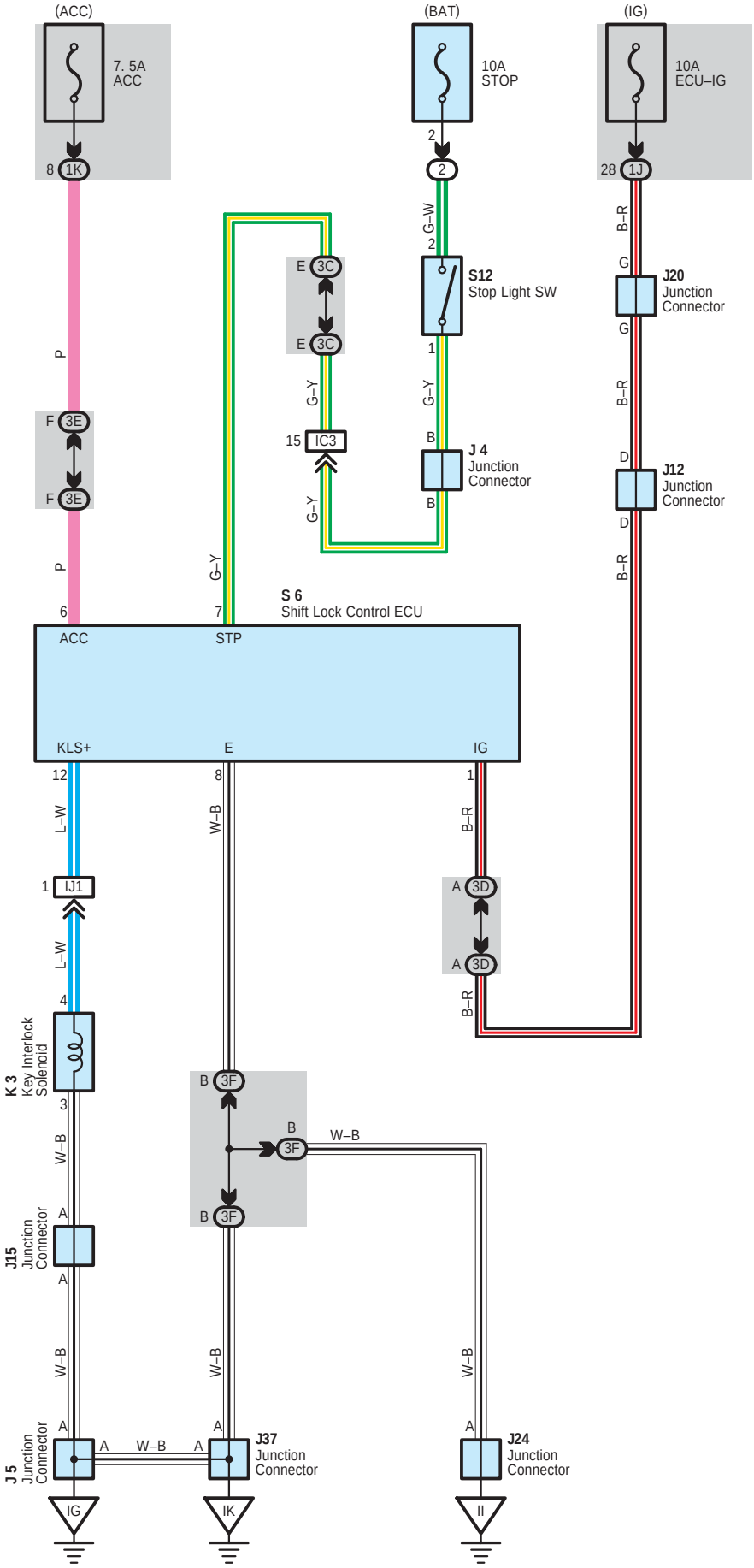
(ACC)
7. 5A
ACC
8
1K
P
F
3E
F
3E
P
6
ACC
(BAT)
10A
STOP
2
2
G–W
2
S12
Stop Light SW
1
G–Y
B
J 4
Junction
Connector
B
E
3C
E
3C
G–Y
15
IC3
G–Y
G–Y
7
STP
S 6
Shift Lock Control ECU
(IG)
10A
ECU–IG
28
1J
B–R
G
J20
Junction
Connector
G
B–R
D
J12
Junction
Connector
D
B–R
KLS+
E
IG
12
L–W
1
IJ1
L–W
4
K 3
Key Interlock
Solenoid
3
W–B
A
J15
Junction
Connector
A
W–B
A
J 5
Junction
Connector
A
A
W–B
A
J37
Junction
Connector
IG
IK
8
W–B
B
3F
B
3F
B
3F
W–B
W–B
1
B–R
A
3D
A
3D
B–R
W–B
A
J24
Junction
Connector
II

System Outline

When the ignition SW is turned to ACC position the current from the ACC fuse flows to TERMINAL 6 of the shift lock control ECU. When the ignition SW is turned to ON position, the current from the ECU–IG fuse flows to TERMINAL 1 of the shift lock control ECU.

1. Shift Lock Mechanism

If the brake pedal is depressed with the ignition SW set at ON (The stop light SW is on), the shift lock control ECU is activated, allowing the driver to change the shift lever to a position other than the P position.

2. Key Interlock Mechanism

With the ignition SW at ON or ACC position, when the shift lever is put in P position, the current flowing from TERMINAL 12 of the shift lock control ECU to key interlock solenoid is cut off. This causes the key interlock solenoid to turn off (Lock lever disengages from LOCK position) and the ignition key can be turned from ACC to LOCK position.

: Parts Location

Code	See Page	Code	See Page	Code	See Page
J4	38	J20	38	S6	39
J5	38	J24	38	S12	39
J12	38	J37	38		
J15	38	K3	39		

: Relay Blocks

Code	See Page	Relay Blocks (Relay Block Location)
2	22	Engine Room R/B (Engine Compartment Left)

: Junction Block and Wire Harness Connector

Code	See Page	Junction Block and Wire Harness (Connector Location)
1J	25	Instrument Panel Wire and Driver Side J/B (Lower Finish Panel)
1K		
3C	28	Instrument Panel Wire and Center J/B (Instrument Panel Brace RH)
3D		
3E		
3F		

: Connector Joining Wire Harness and Wire Harness

Code	See Page	Joining Wire Harness and Wire Harness (Connector Location)
IC3	46	Instrument Panel Wire and Engine Room Main Wire (Left Kick Panel)
IJ1	47	Instrument Panel Wire and Instrument Panel Wire (Instrument Panel Brace RH)

: Ground Points

Code	See Page	Ground Points Location
IG	46	Left Kick Panel
II	46	Instrument Panel Brace RH
IK	46	Right Kick Panel

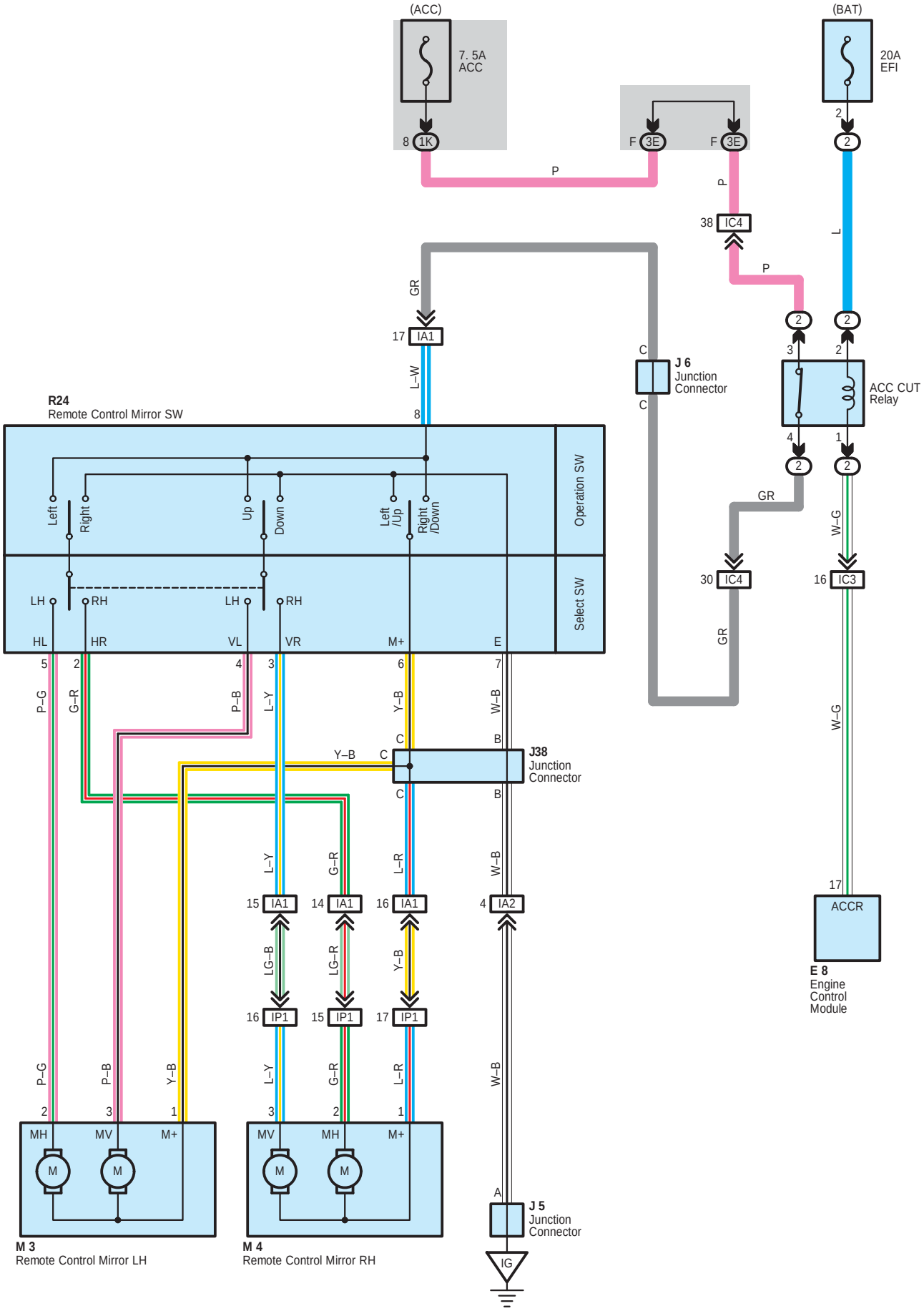
(ACC)
7. 5A
ACC
8 1K
F 3E
F 3E
P
P
38 IC4
(BAT)
20A
EFI
2
2
L
P
2
2
3
2
ACC CUT
Relay
4
1
2
2
GR
30 IC4
GR
W–G
16 IC3
W–G
17
ACCR
E 8
Engine
Control
Module
GR
17 IA1
L–W
8
C
J 6
Junction
Connector
C
R24
Remote Control Mirror SW
Operation SW
Select SW
Left
Right
Up
Down
Left
/Up
Right
/Down
LH
RH
LH
RH
HL
HR
VL
VR
M+
E
5
2
4
3
6
7
P–G
G–R
P–B
L–Y
Y–B
W–B
C
B
Y–B
C
J38
Junction
Connector
C
B
L–Y
G–R
L–R
W–B
15 IA1
14 IA1
16 IA1
4 IA2
LG–B
LG–R
Y–B
16 IP1
15 IP1
17 IP1
P–G
P–B
Y–B
L–Y
G–R
L–R
W–B
2
3
1
3
2
1
MH
MV
M+
MV
MH
M+
M
M
M
M
A
J 5
Junction
Connector
IG
M 3
Remote Control Mirror LH
M 4
Remote Control Mirror RH

: Parts Location

Code	See Page	Code	See Page	Code	See Page
E8	37	J38	40	R24	41
J5	38	M3	41		
J6	38	M4	41		

: Relay Blocks

Code	See Page	Relay Blocks (Relay Block Location)
2	22	Engine Room R/B (Engine Compartment Left)

: Junction Block and Wire Harness Connector

Code	See Page	Junction Block and Wire Harness (Connector Location)
1K	25	Instrument Panel Wire and Driver Side J/B (Lower Finish Panel)
3E	28	Instrument Panel Wire and Center J/B (Instrument Panel Brace RH)

: Connector Joining Wire Harness and Wire Harness

Code	See Page	Joining Wire Harness and Wire Harness (Connector Location)
IA1	46	Front Door LH Wire and Instrument Panel Wire (Left Kick Panel)
IA2		
IC3	46	Instrument Panel Wire and Engine Room Main Wire (Left Kick Panel)
IC4		
IP1	47	Front Door RH Wire and Instrument Panel Wire (Right Kick Panel)

: Ground Points

Code	See Page	Ground Points Location
IG	46	Left Kick Panel

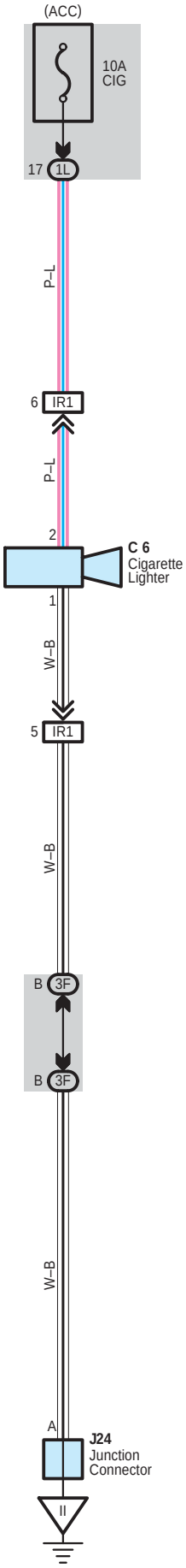
(ACC)
10A
CIG
17
1L
P–L
6
IR1
P–L
2
C 6
Cigarette
Lighter
1
W–B
5
IR1
W–B
B
3F
B
3F
W–B
A
J24
Junction
Connector

: Parts Location

Code	See Page	Code	See Page	Code	See Page
C6	37	J24	38		

: Junction Block and Wire Harness Connector

Code	See Page	Junction Block and Wire Harness (Connector Location)
1L	25	Instrument Panel Wire and Driver Side J/B (Lower Finish Panel)
3F	28	Instrument Panel Wire and Center J/B (Instrument Panel Brace RH)

: Connector Joining Wire Harness and Wire Harness

Code	See Page	Joining Wire Harness and Wire Harness (Connector Location)
IR1	47	Instrument Panel Wire and Cigarette Lighter Wiring Assembly (Rear Console)

: Ground Points

Code	See Page	Ground Points Location
II	46	Instrument Panel Brace RH

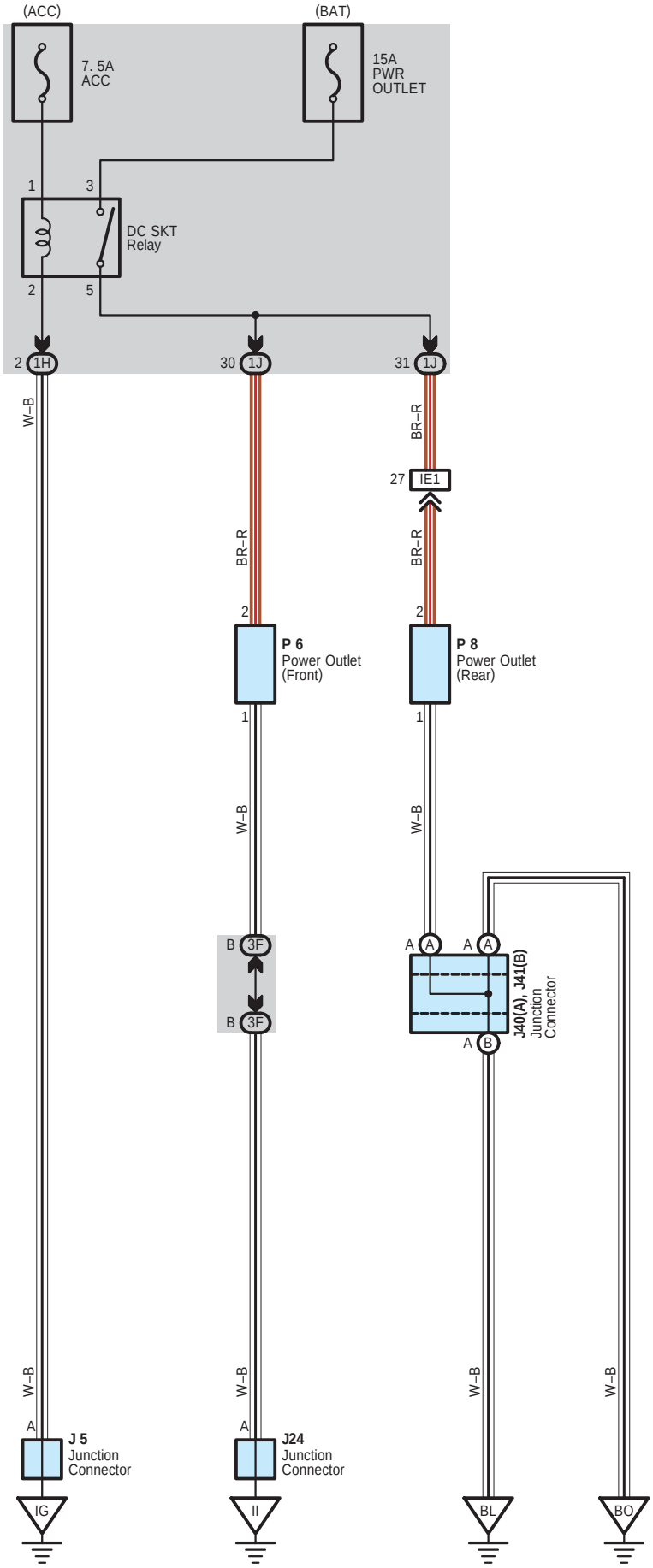
(ACC)
(BAT)
7. 5A
ACC
15A
PWR
OUTLET
1
3
DC SKT
Relay
2
5
2 1H
30 1J
31 1J
W–B
BR–R
27 IE1
BR–R
2
P 6
Power Outlet
(Front)
1
W–B
2
P 8
Power Outlet
(Rear)
1
W–B
B 3F
B 3F
A A
A A
J40(A), J41(B)
Junction
Connector
A B
W–B
W–B
W–B
A
J 5
Junction
Connector
A
J24
Junction
Connector
IG
II
BL
BO

: Parts Location

Code	See Page	Code		See Page	Code	See Page
J5	38	J40	A	40	P6	39
J24	38	J41	B	40	P8	41

: Junction Block and Wire Harness Connector

Code	See Page	Junction Block and Wire Harness (Connector Location)
1H	25	Instrument Panel Wire and Driver Side J/B (Lower Finish Panel)
1J		
3F	28	Instrument Panel Wire and Center J/B (Instrument Panel Brace RH)

: Connector Joining Wire Harness and Wire Harness

Code	See Page	Joining Wire Harness and Wire Harness (Connector Location)
IE1	46	Instrument Panel Wire and Floor No.2 Wire (Left Kick Panel)

: Ground Points

Code	See Page	Ground Points Location
IG	46	Left Kick Panel
II	46	Instrument Panel Brace RH
BL	48	Floor Seat Crossmember LH
BO	48	Rear Pillar LH

Power Outlet for 115V

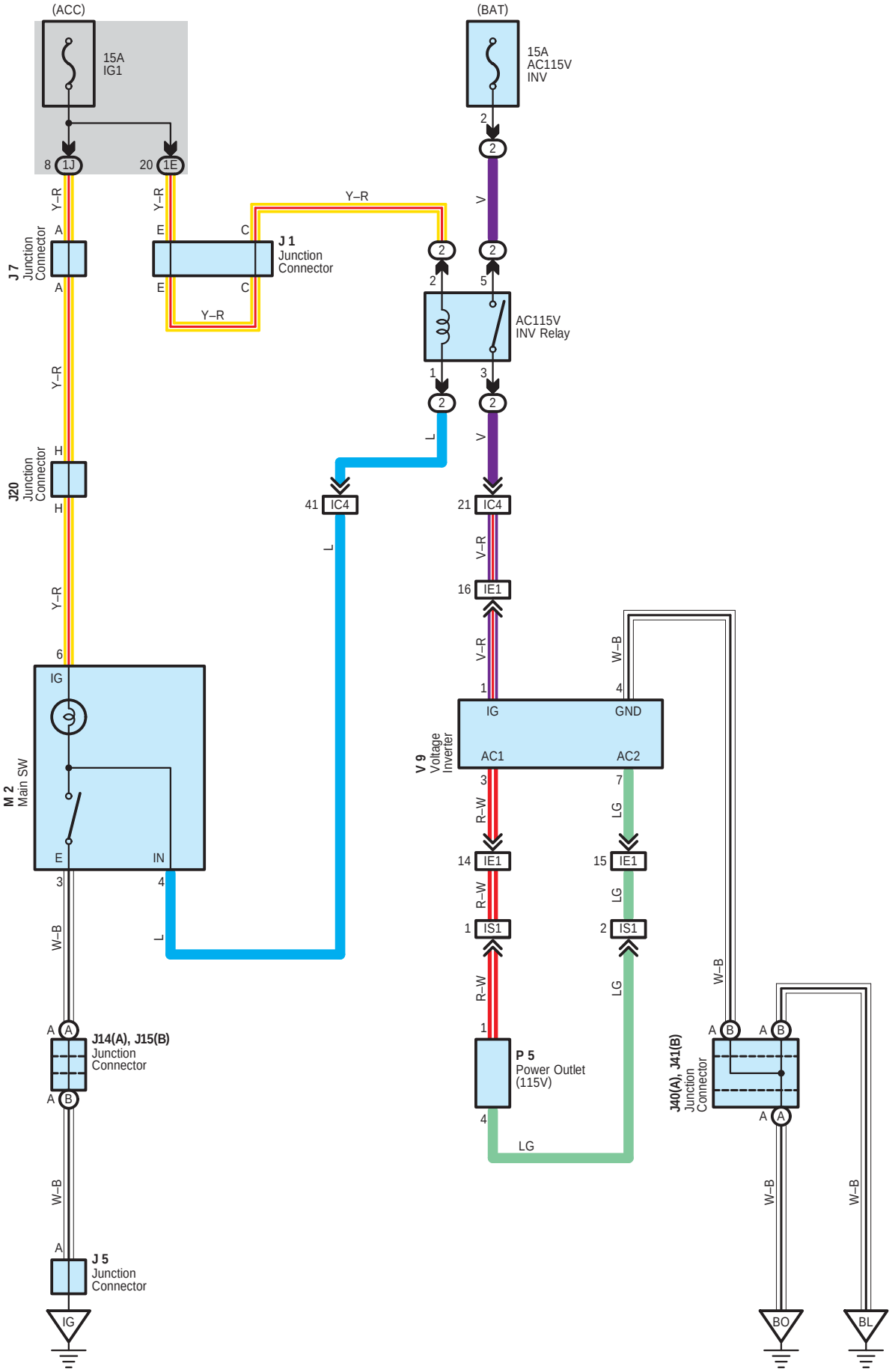

: Parts Location

Code	See Page	Code	See Page	Code	See Page
J1	33 (2UZ–FE)	J14 A	38	J41 B	40
	35 (1GR–FE)	J15 B	38	M2	39
J5	38	J20	38	P5	39
J7	38	J40 A	40	V9	41

: Relay Blocks

Code	See Page	Relay Blocks (Relay Block Location)
2	22	Engine Room R/B (Engine Compartment Left)

: Junction Block and Wire Harness Connector

Code	See Page	Junction Block and Wire Harness (Connector Location)
1E	24	Engine Room Main Wire and Driver Side J/B (Lower Finish Panel)
1J	25	Instrument Panel Wire and Driver Side J/B (Lower Finish Panel)

: Connector Joining Wire Harness and Wire Harness

Code	See Page	Joining Wire Harness and Wire Harness (Connector Location)
IC4	46	Instrument Panel Wire and Engine Room Main Wire (Left Kick Panel)
IE1	46	Instrument Panel Wire and Floor No.2 Wire (Left Kick Panel)
IS1	47	Instrument Panel Wire and Console Box Wire (Rear Console)

: Ground Points

Code	See Page	Ground Points Location
IG	46	Left Kick Panel
BL	48	Floor Seat Crossmember LH
BO	48	Rear Pillar LH

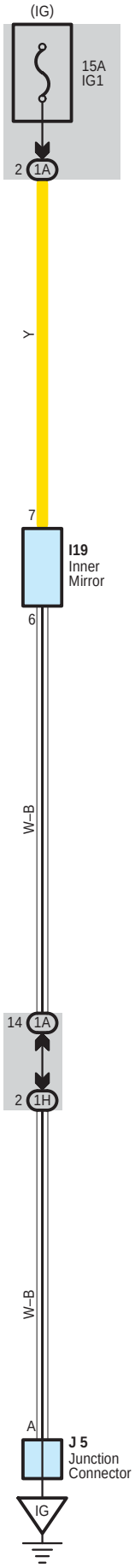
(IG)
15A
IG1
2
1A
Y
7
I19
Inner
Mirror
6
W–B
14
1A
2
1H
W–B
A
J 5
Junction
Connector
IG

○ : **Parts Location**

Code	See Page	Code	See Page	Code	See Page
I19	40	J5	38		

: **Junction Block and Wire Harness Connector**

Code	See Page	Junction Block and Wire Harness (Connector Location)
1A	24	Roof Wire and Driver Side J/B (Lower Finish Panel)
1H	25	Instrument Panel Wire and Driver Side J/B (Lower Finish Panel)

▽ : **Ground Points**

Code	See Page	Ground Points Location
IG	46	Left Kick Panel

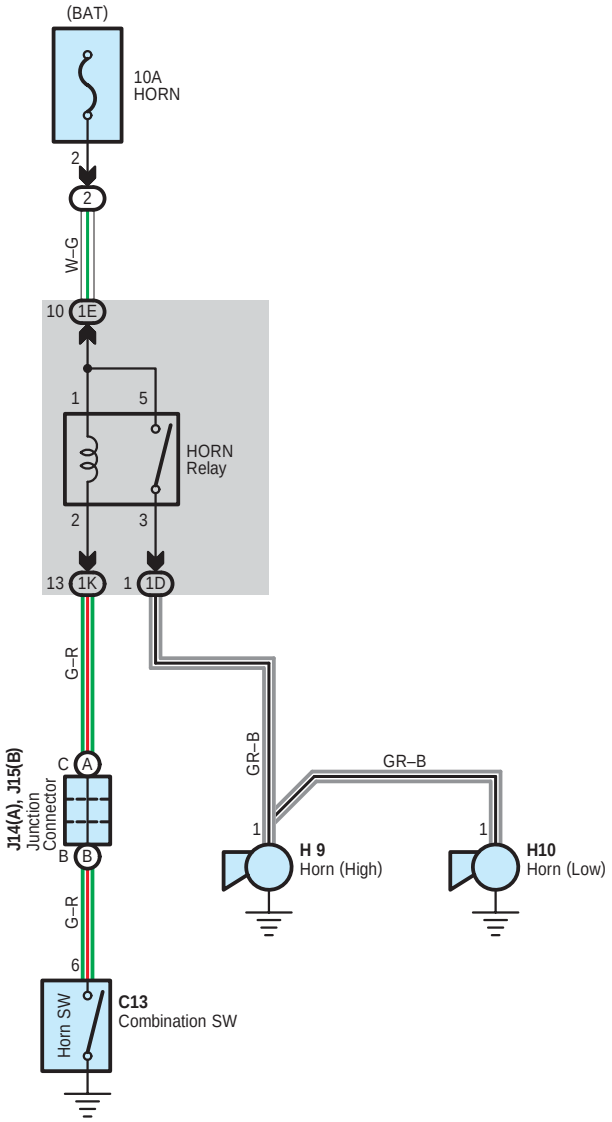
(BAT)
10A
HORN
2
2
W–G
10
1E
1
5
HORN
Relay
2
3
13
1K
1
1D
G–R
GR–B
GR–B
J14(A), J15(B)
Junction
Connector
C
A
B
B
1
H 9
Horn (High)
1
H10
Horn (Low)
G–R
6
Horn SW
C13
Combination SW

○ : Parts Location

Code	See Page	Code	See Page	Code	See Page
C13	37	H10	32 (2UZ–FE)	J15 B	38
H9	32 (2UZ–FE)		34 (1GR–FE)		
	34 (1GR–FE)	J14 A	38		

⬭ : Relay Blocks

Code	See Page	Relay Blocks (Relay Block Location)
2	22	Engine Room R/B (Engine Compartment Left)

⬭ : Junction Block and Wire Harness Connector

Code	See Page	Junction Block and Wire Harness (Connector Location)
1D	24	Engine Room Main Wire and Driver Side J/B (Lower Finish Panel)
1E		
1K	25	Instrument Panel Wire and Driver Side J/B (Lower Finish Panel)

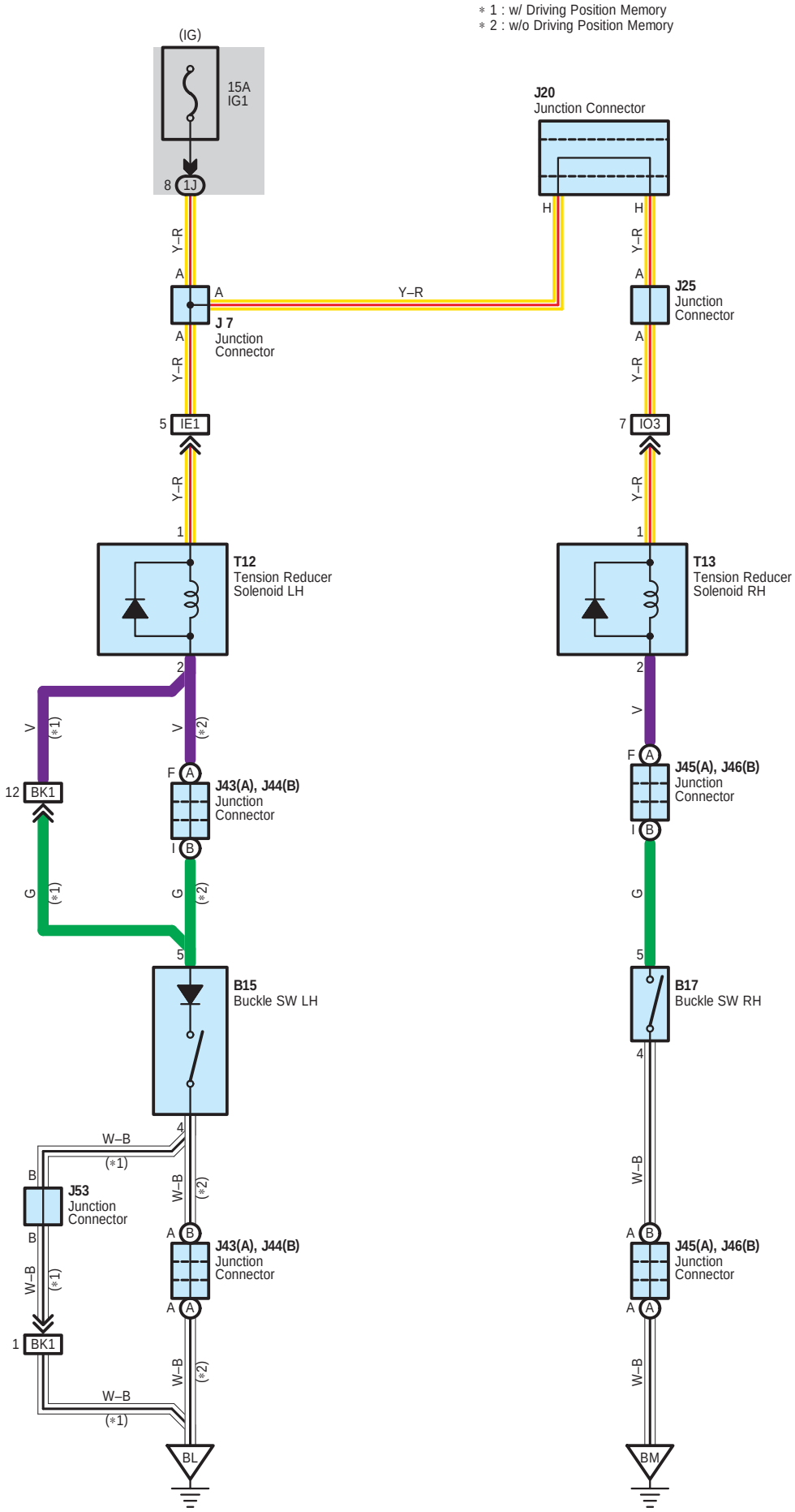
∗ 1 : w/ Driving Position Memory
∗ 2 : w/o Driving Position Memory
(IG)
15A
IG1
8 1J
J20
Junction Connector
H
H
Y–R
A
A
Y–R
J 7
Junction
Connector
J25
Junction
Connector
5 IE1
7 IO3
1
T12
Tension Reducer
Solenoid LH
T13
Tension Reducer
Solenoid RH
2
V
(∗1)
(∗2)
12 BK1
F A
J43(A), J44(B)
Junction
Connector
J45(A), J46(B)
Junction
Connector
I B
G
5
B15
Buckle SW LH
B17
Buckle SW RH
4
W–B
B
J53
Junction
Connector
A B
A A
1 BK1
BL
BM

○ : Parts Location

Code	See Page	Code		See Page	Code		See Page
B15	42 (*1)	J25		38	J45	A	43 (*2)
	43 (*2)	J43	A	42 (*1)	J46	B	42 (*1)
B17	42 (*1)			43 (*2)			43 (*2)
	43 (*2)	J44	B	42 (*1)	J53		42 (*1)
J7	38			43 (*2)	T12		41
J20	38	J45	A	42 (*1)	T13		41

: Junction Block and Wire Harness Connector

Code	See Page	Junction Block and Wire Harness (Connector Location)
1J	25	Instrument Panel Wire and Driver Side J/B (Lower Finish Panel)

: Connector Joining Wire Harness and Wire Harness

Code	See Page	Joining Wire Harness and Wire Harness (Connector Location)
IE1	46	Instrument Panel Wire and Floor No.2 Wire (Left Kick Panel)
IO3	47	Instrument Panel Wire and Floor Wire (Right Kick Panel)
BK1	50 (*1)	Floor No.2 Wire and Seat No.2 Wire (Under the Front LH Seat)

: Ground Points

Code	See Page	Ground Points Location
BL	48	Floor Seat Crossmember LH
BM	48	Floor Seat Crossmember RH

* 1 : Power Seat * 2 : Manual Seat

Power Seat for Driver's Seat with Memory

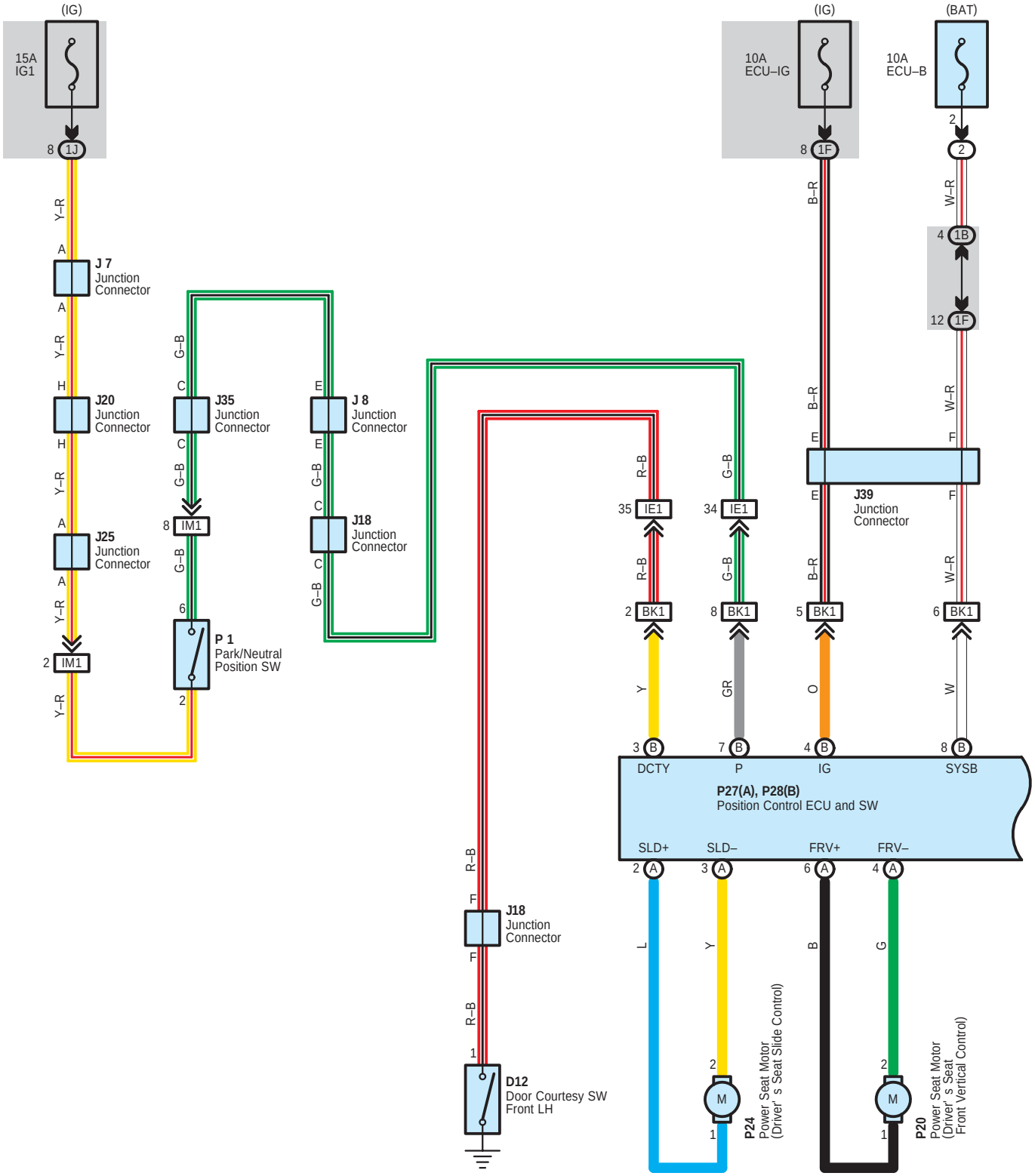

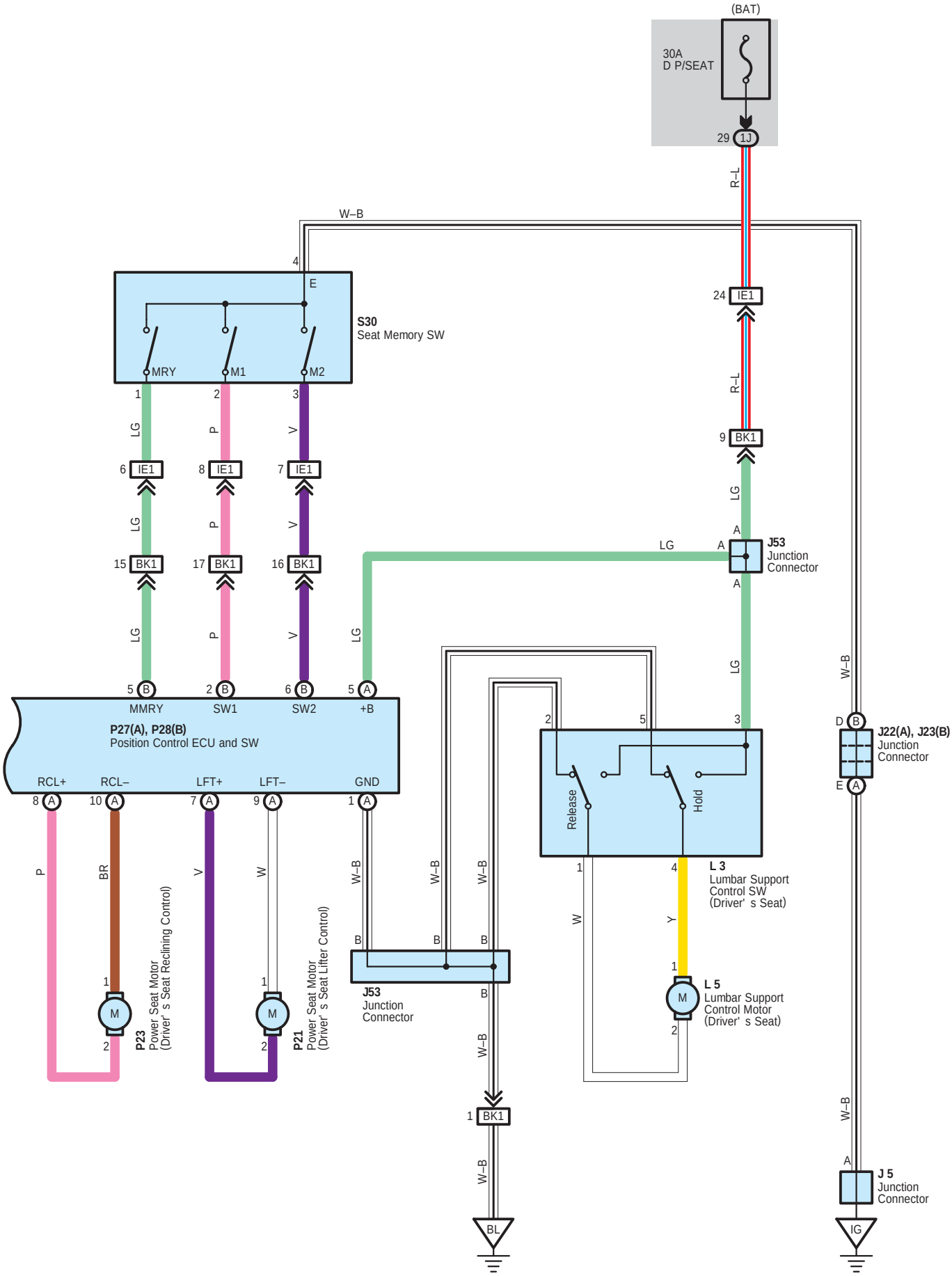
(BAT)
30A
D P/SEAT
29 1J
R–L
W–B
4
E
S30
Seat Memory SW
MRY
M1
M2
1
2
3
LG
P
V
6 IE1
8 IE1
7 IE1
24 IE1
9 BK1
15 BK1
17 BK1
16 BK1
A
J53
Junction
Connector
5 B
2 B
6 B
5 A
MMRY
SW1
SW2
+B
P27(A), P28(B)
Position Control ECU and SW
RCL+
RCL–
LFT+
LFT–
GND
8 A
10 A
7 A
9 A
1 A
P
BR
V
W
W–B
B
Release
Hold
L 3
Lumbar Support
Control SW
(Driver' s Seat)
Y
L 5
Lumbar Support
Control Motor
(Driver' s Seat)
P23
Power Seat Motor
(Driver' s Seat Reclining Control)
P21
Power Seat Motor
(Driver' s Seat Lifter Control)
J53
Junction
Connector
D B
E A
J22(A), J23(B)
Junction
Connector
J 5
Junction
Connector
BL
IG

Power Seat for Driver's Seat with Memory

System Outline

* In the power seat system, the position control ECU and SW receives the operation signal from the power seat control switch via infrared communication to operate each power seat motor and adjust the seat position.
* In the event that malfunction occurs during infrared communication, this system has a fail–safe function to only slide or recline the seat.
* This system has the following function:
  * Manual slide operation
  * Manual reclining control
  * Manual front vertical control
  * Manual rear vertical operation
  * Driving position memory function

: Parts Location

Code	See Page	Code	See Page	Code	See Page
D12	40	J35	38	P20	42 (*1)
J5	38	J39	40	P21	42 (*1)
J7	38	J53	42 (*1)	P23	42 (*1)
J8	38	L3	42 (*1)	P24	42 (*1)
J18	38		43 (*2)	P27 A	42 (*1)
J20	38	L5	42 (*1)	P28 B	42 (*1)
J22 A	38		43 (*2)	S30	39
J23 B	38	P1	33 (2UZ–FE)		
J25	38		35 (1GR–FE)		

: Relay Blocks

Code	See Page	Relay Blocks (Relay Block Location)
2	22	Engine Room R/B (Engine Compartment Left)

: Junction Block and Wire Harness Connector

Code	See Page	Junction Block and Wire Harness (Connector Location)
1B	24	Engine Room Main Wire and Driver Side J/B (Lower Finish Panel)
1F	24	Floor No.2 Wire and Driver Side J/B (Lower Finish Panel)
1J	25	Instrument Panel Wire and Driver Side J/B (Lower Finish Panel)

: Connector Joining Wire Harness and Wire Harness

Code	See Page	Joining Wire Harness and Wire Harness (Connector Location)
IE1	46	Instrument Panel Wire and Floor No.2 Wire (Left Kick Panel)
IM1	47	Engine Wire and Instrument Panel Wire (Right Side of Blower Unit)
BK1	50 (*1)	Floor No.2 Wire and Seat No.2 Wire (Under the Front LH Seat)

: Ground Points

Code	See Page	Ground Points Location
IG	46	Left Kick Panel
BL	48	Floor Seat Crossmember LH

* 1 : Power Seat * 2 : Manual Seat

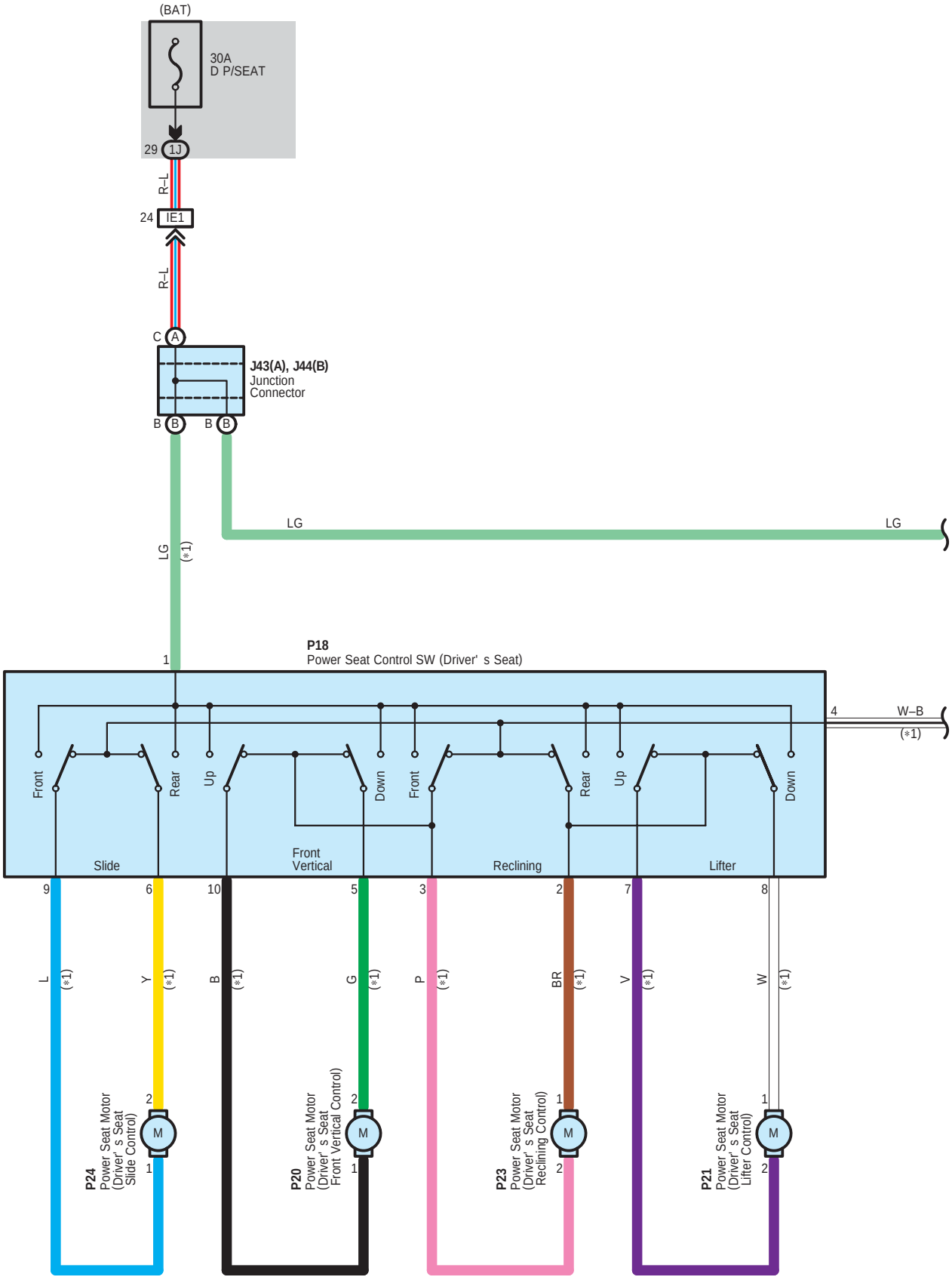
(BAT)
30A
D P/SEAT
29
1J
R–L
24
IE1
R–L
C
A
J43(A), J44(B)
Junction
Connector
B
B
B
B
LG
LG
LG
(*1)
1
P18
Power Seat Control SW (Driver' s Seat)
4
W–B
(*1)
Front
Rear
Up
Down
Front
Rear
Up
Down
Slide
Front
Vertical
Reclining
Lifter
9
6
10
5
3
2
7
8
L
(*1)
Y
(*1)
B
(*1)
G
(*1)
P
(*1)
BR
(*1)
V
(*1)
W
(*1)
P24
Power Seat Motor
(Driver' s Seat
Slide Control)
P20
Power Seat Motor
(Driver' s Seat
Front Vertical Control)
P23
Power Seat Motor
(Driver' s Seat
Reclining Control)
P21
Power Seat Motor
(Driver' s Seat
Lifter Control)
M

∗ 1 : w/ Power Seat (Front Passenger' s Seat)

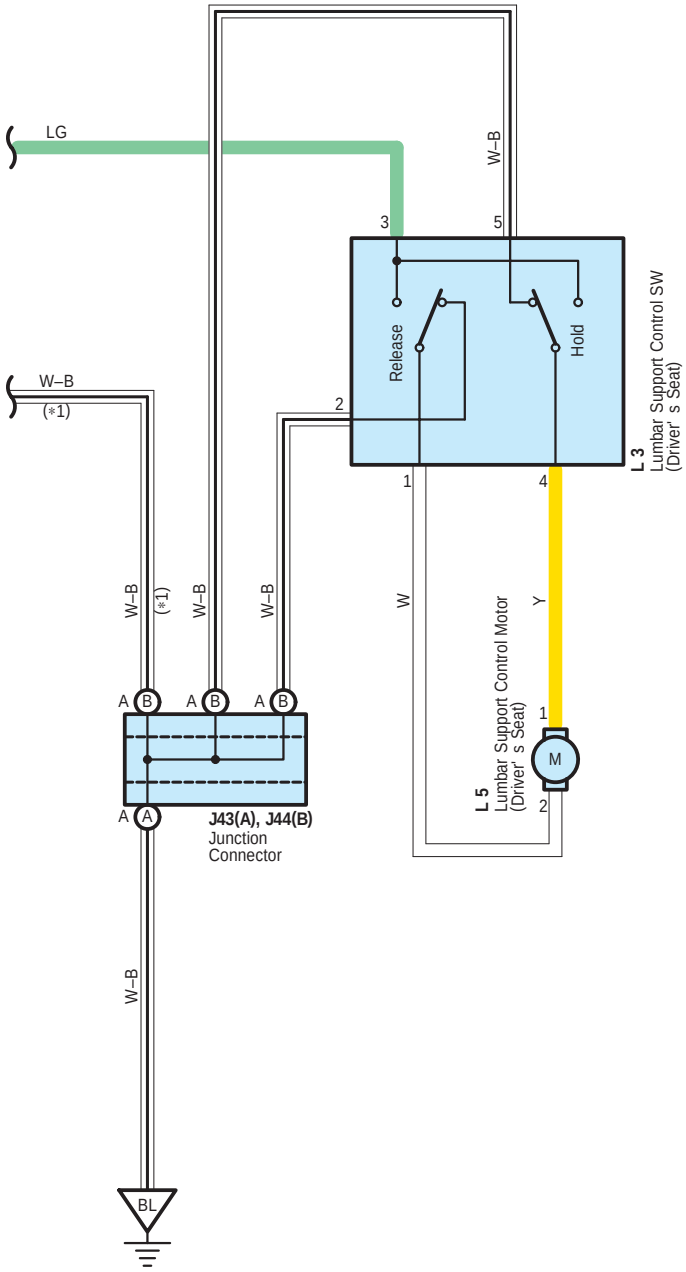

Power Seat for Driver's Seat without Memory

: Parts Location

Code		See Page	Code	See Page	Code	See Page
J43	A	42 (*1)	L3	43 (*2)	P21	42 (*1)
		43 (*2)	L5	42 (*1)	P23	42 (*1)
J44	B	42 (*1)		43 (*2)	P24	42 (*1)
		43 (*2)	P18	42 (*1)		
L3		42 (*1)	P20	42 (*1)		

: Junction Block and Wire Harness Connector

Code	See Page	Junction Block and Wire Harness (Connector Location)
1J	25	Instrument Panel Wire and Driver Side J/B (Lower Finish Panel)

: Connector Joining Wire Harness and Wire Harness

Code	See Page	Joining Wire Harness and Wire Harness (Connector Location)
IE1	46	Instrument Panel Wire and Floor No.2 Wire (Left Kick Panel)

: Ground Points

Code	See Page	Ground Points Location
BL	48	Floor Seat Crossmember LH

* 1 : Power Seat * 2 : Manual Seat

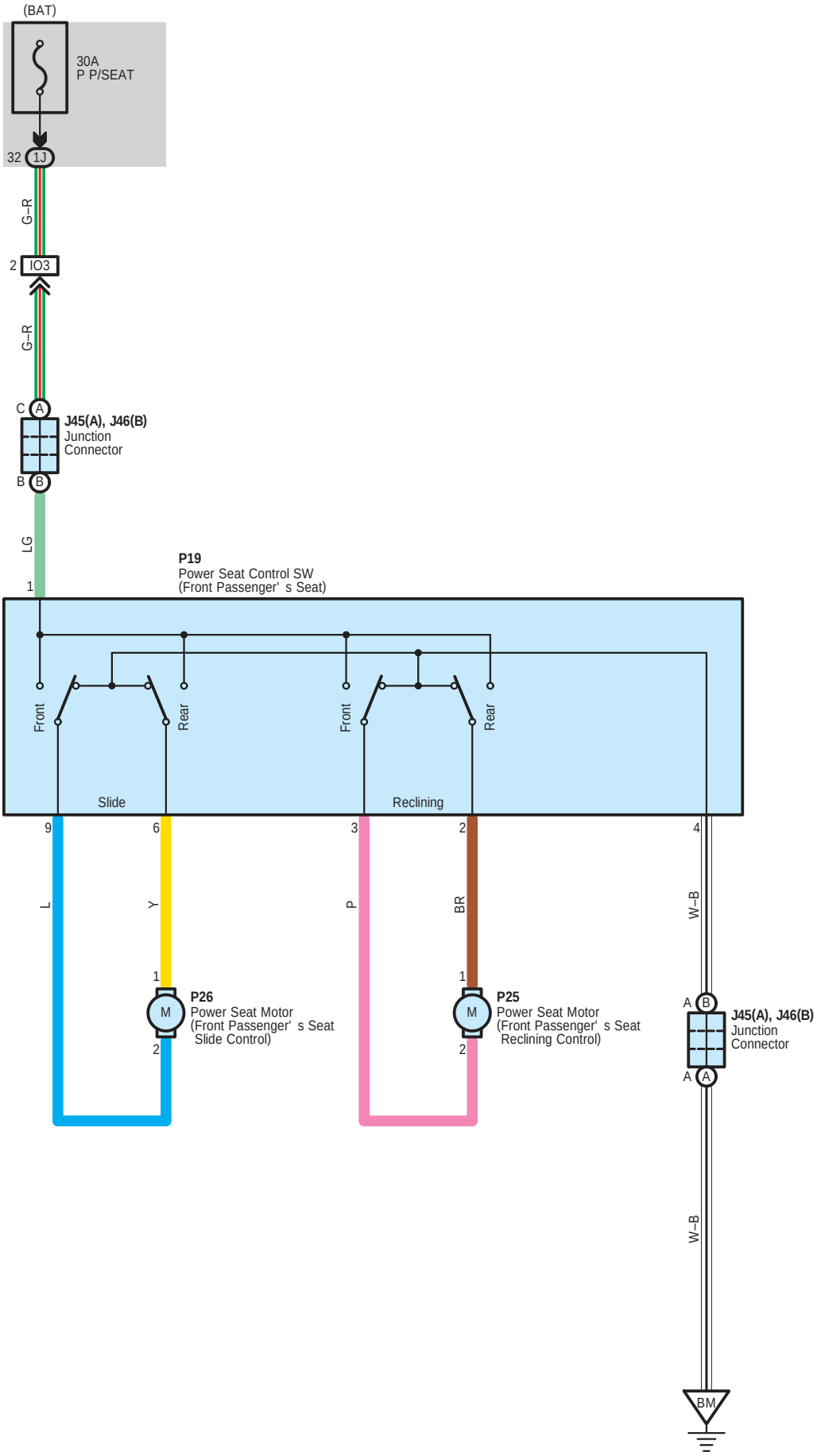
(BAT)
30A
P P/SEAT
32
1J
G–R
2
IO3
G–R
C
A
J45(A), J46(B)
Junction
Connector
B
B
LG
1
P19
Power Seat Control SW
(Front Passenger' s Seat)
Front
Rear
Front
Rear
Slide
Reclining
9
6
3
2
4
L
Y
P
BR
W–B
1
M
2
P26
Power Seat Motor
(Front Passenger' s Seat
Slide Control)
1
M
2
P25
Power Seat Motor
(Front Passenger' s Seat
Reclining Control)
A
B
J45(A), J46(B)
Junction
Connector
A
A
W–B
BM

○ : Parts Location

Code		See Page	Code		See Page	Code	See Page
J45	A	42 (*1)	J46	B	43 (*2)	P26	42 (*1)
		43 (*2)	P19		42 (*1)		
J46	B	42 (*1)	P25		42 (*1)		

⬭ : Junction Block and Wire Harness Connector

Code	See Page	Junction Block and Wire Harness (Connector Location)
1J	25	Instrument Panel Wire and Driver Side J/B (Lower Finish Panel)

▭ : Connector Joining Wire Harness and Wire Harness

Code	See Page	Joining Wire Harness and Wire Harness (Connector Location)
IO3	47	Instrument Panel Wire and Floor Wire (Right Kick Panel)

▽ : Ground Points

Code	See Page	Ground Points Location
BM	48	Floor Seat Crossmember RH

* 1 : Power Seat * 2 : Manual Seat

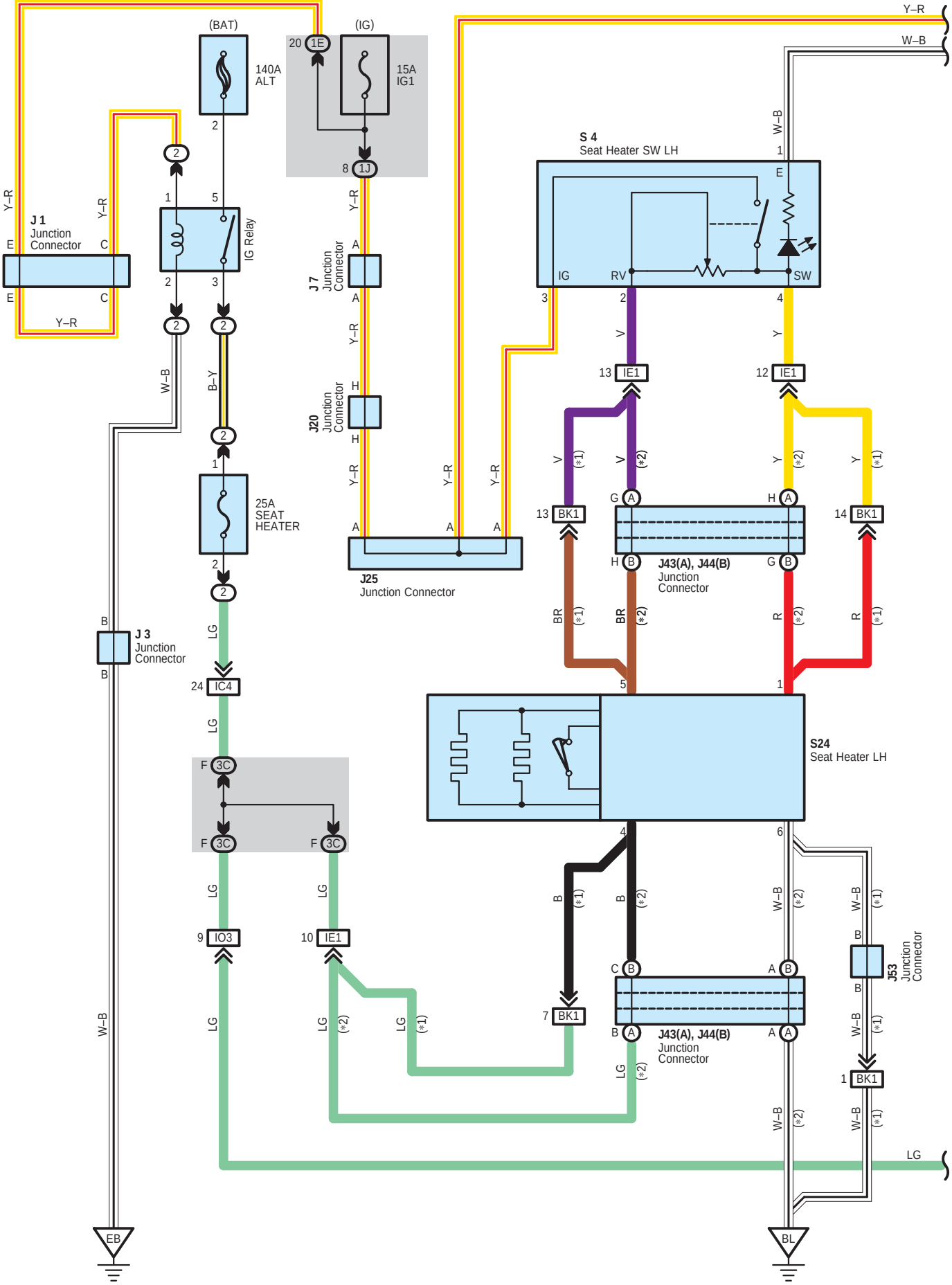
(BAT)
(IG)
140A
ALT
15A
IG1
20 1E
8 1J
J 1
Junction
Connector
IG Relay
J 7
Junction
Connector
J20
Junction
Connector
J25
Junction Connector
25A
SEAT
HEATER
J 3
Junction
Connector
S 4
Seat Heater SW LH
IG
RV
SW
13 IE1
12 IE1
13 BK1
14 BK1
J43(A), J44(B)
Junction
Connector
S24
Seat Heater LH
24 IC4
F 3C
9 IO3
10 IE1
7 BK1
J53
Junction
Connector
1 BK1
EB
BL
Y–R
W–B
B–Y
LG
V
Y
BR
R
B
(*1)
(*2)

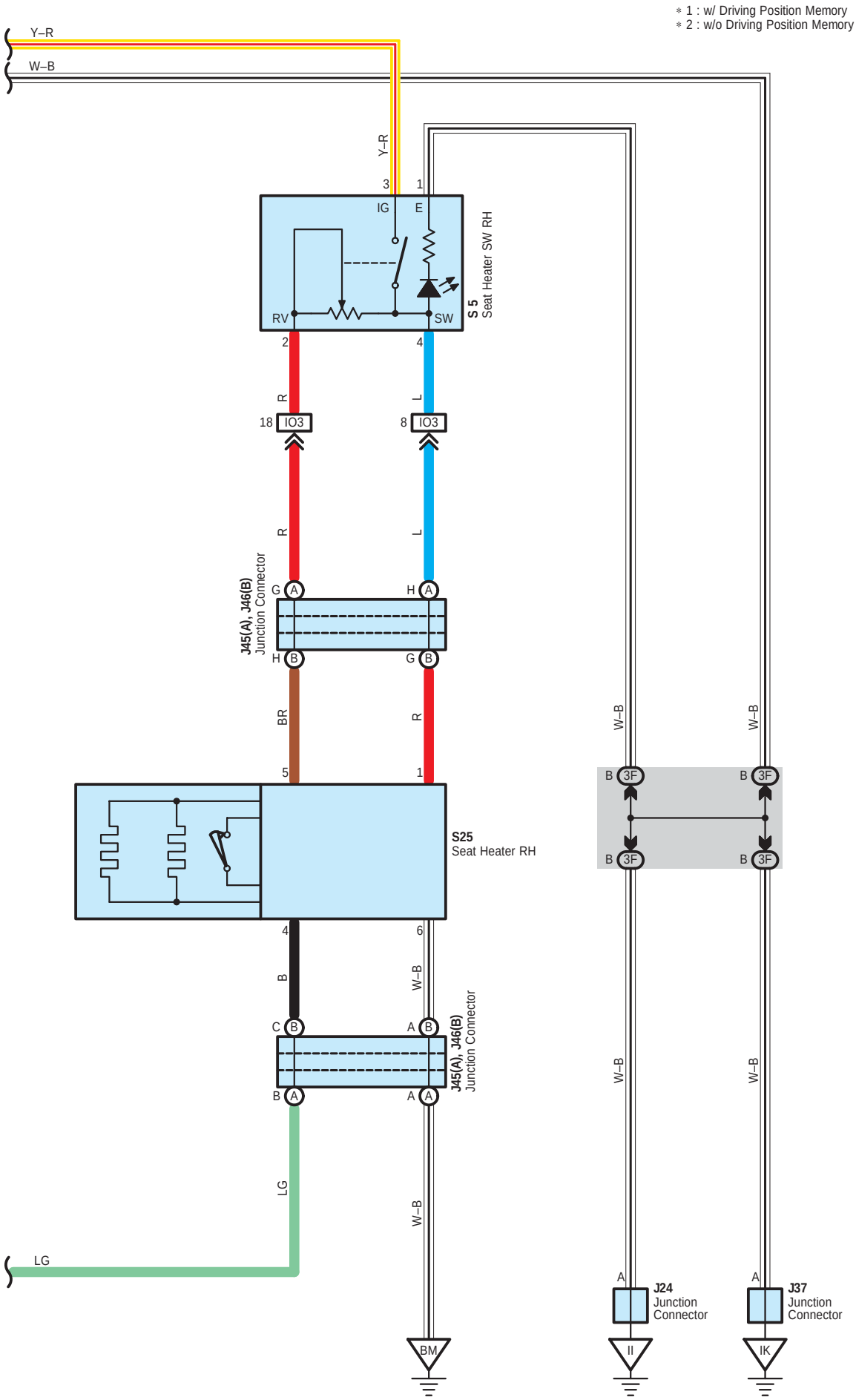
* 1 : w/ Driving Position Memory
* 2 : w/o Driving Position Memory
Y–R
W–B
Y–R
3
1
IG
E
RV
SW
S 5
Seat Heater SW RH
2
4
R
L
18
IO3
8
IO3
R
L
J45(A), J46(B)
Junction Connector
G
A
H
A
H
B
G
B
BR
R
5
1
S25
Seat Heater RH
4
6
B
W–B
C
B
A
B
J45(A), J46(B)
Junction Connector
B
A
A
A
LG
W–B
LG
BM
W–B
W–B
B
3F
B
3F
B
3F
B
3F
W–B
W–B
A
J24
Junction
Connector
II
A
J37
Junction
Connector
IK

Seat Heater

○ : Parts Location

Code	See Page	Code		See Page	Code		See Page
J1	33 (2UZ–FE)	J37		38	J46	B	43 (*2)
	35 (1GR–FE)	J43	A	42 (*1)	J53		42 (*1)
J3	33 (2UZ–FE)			43 (*2)	S4		39
	35 (1GR–FE)	J44	B	42 (*1)	S5		39
J7	38			43 (*2)	S24		42 (*1)
J20	38	J45	A	42 (*1)	S25		42 (*1)
J24	38			43 (*2)			
J25	38	J46	B	42 (*1)			

▭ : Relay Blocks

Code	See Page	Relay Blocks (Relay Block Location)
2	22	Engine Room R/B (Engine Compartment Left)

▭ : Junction Block and Wire Harness Connector

Code	See Page	Junction Block and Wire Harness (Connector Location)
1E	24	Engine Room Main Wire and Driver Side J/B (Lower Finish Panel)
1J	25	Instrument Panel Wire and Driver Side J/B (Lower Finish Panel)
3C	28	Instrument Panel Wire and Center J/B (Instrument Panel Brace RH)
3F		

▭ : Connector Joining Wire Harness and Wire Harness

Code	See Page	Joining Wire Harness and Wire Harness (Connector Location)
IC4	46	Instrument Panel Wire and Engine Room Main Wire (Left Kick Panel)
IE1	46	Instrument Panel Wire and Floor No.2 Wire (Left Kick Panel)
IO3	47	Instrument Panel Wire and Floor Wire (Right Kick Panel)
BK1	50 (*1)	Floor No.2 Wire and Seat No.2 Wire (Under the Front LH Seat)

▽ : Ground Points

Code	See Page	Ground Points Location
EB	44 (2UZ–FE)	Front Left Fender
	45 (1GR–FE)	
II	46	Instrument Panel Brace RH
IK	46	Right Kick Panel
BL	48	Floor Seat Crossmember LH
BM	48	Floor Seat Crossmember RH

* 1 : Power Seat * 2 : Manual Seat

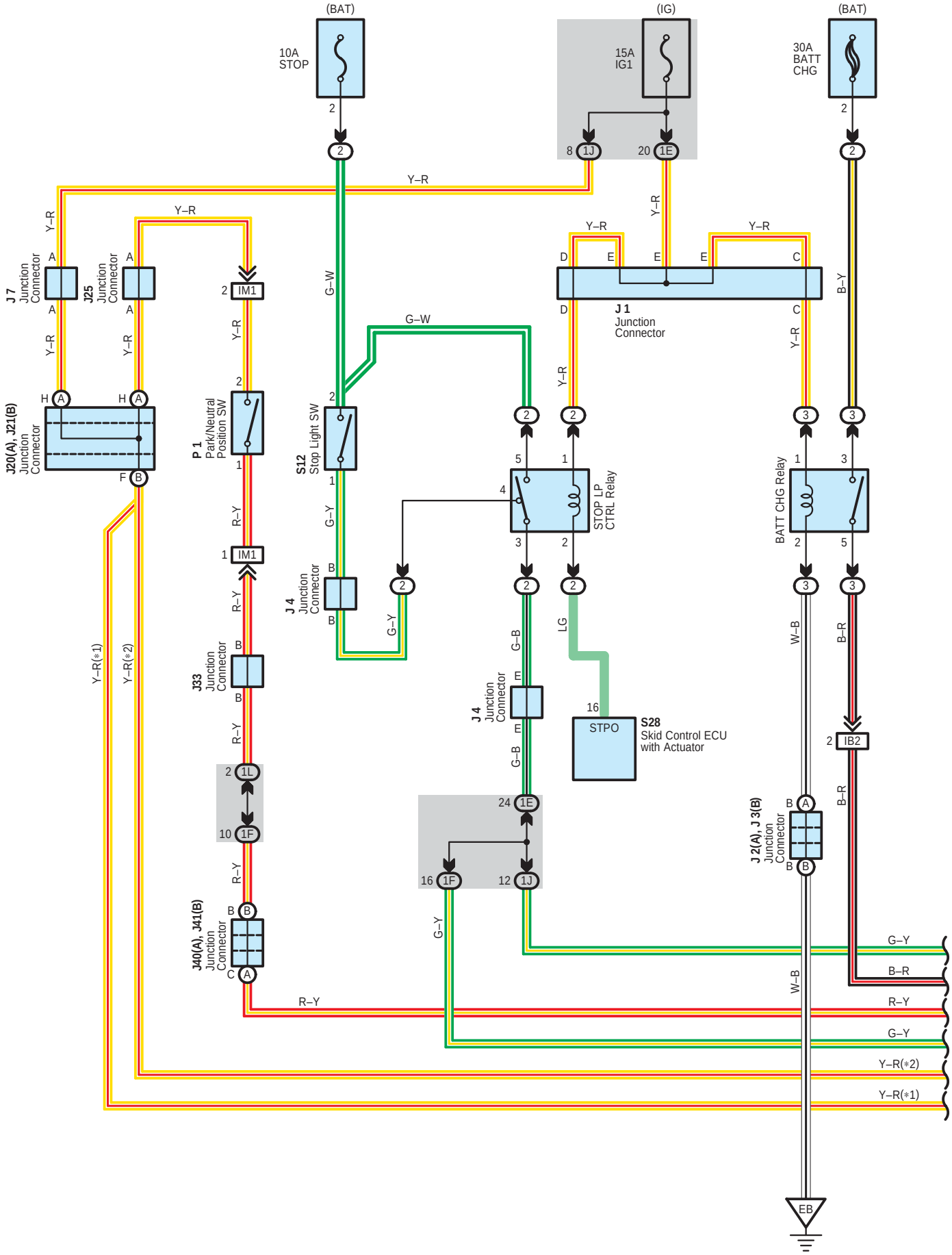
(BAT)
10A
STOP
(IG)
15A
IG1
(BAT)
30A
BATT
CHG
Y–R
G–W
J 7
Junction
Connector
J25
Junction
Connector
J20(A), J21(B)
Junction
Connector
P 1
Park/Neutral
Position SW
S12
Stop Light SW
J 1
Junction
Connector
STOP LP
CTRL Relay
BATT CHG Relay
J 4
Junction
Connector
J33
Junction
Connector
J40(A), J41(B)
Junction
Connector
J 4
Junction
Connector
J 2(A), J 3(B)
Junction
Connector
S28
Skid Control ECU
with Actuator
STPO
IM1
IB2
EB
R–Y
G–Y
G–B
LG
W–B
B–R
Y–R(*1)
Y–R(*2)

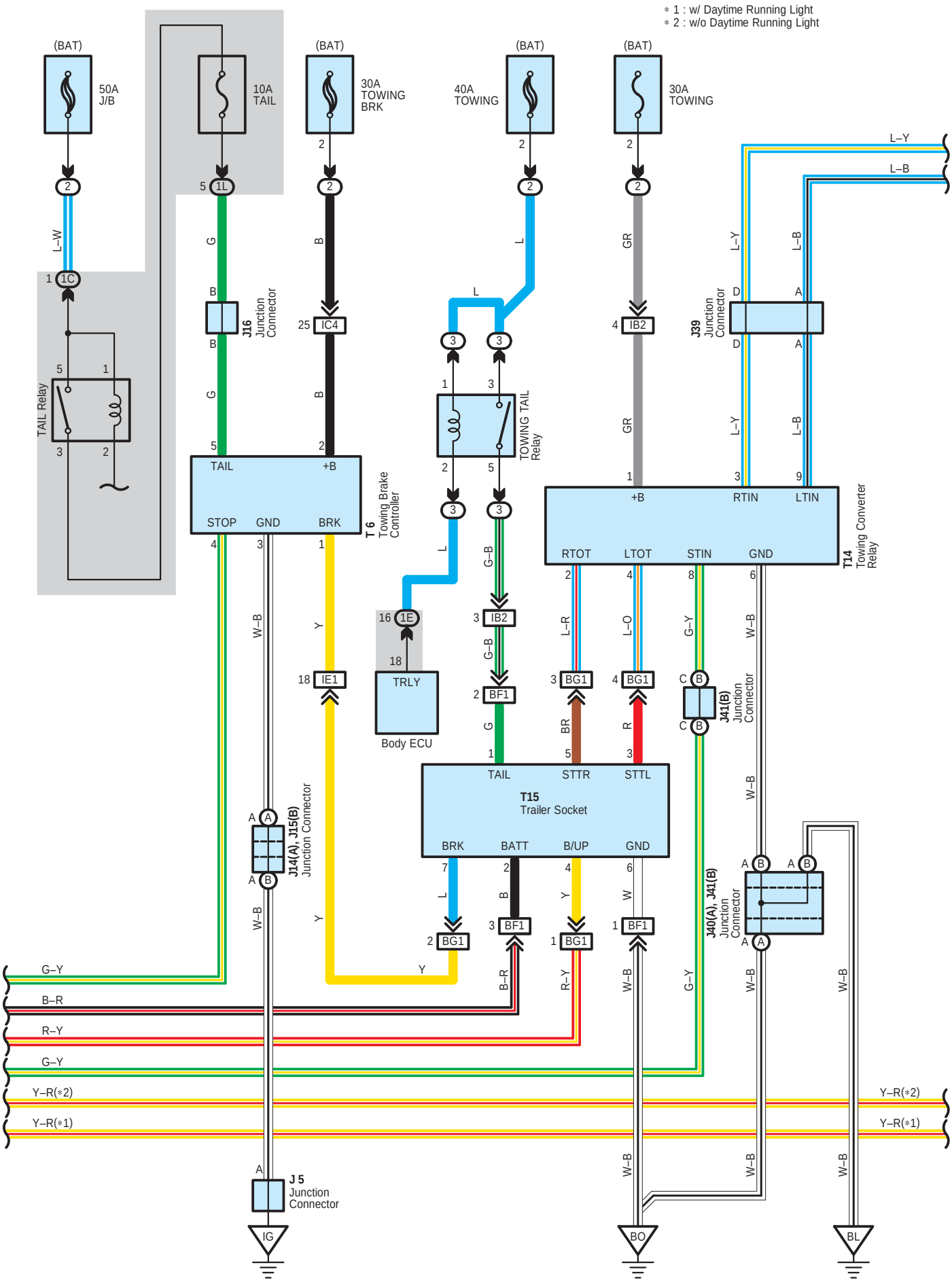
∗ 1 : w/ Daytime Running Light
∗ 2 : w/o Daytime Running Light
(BAT)
50A J/B
10A TAIL
30A TOWING BRK
40A TOWING
30A TOWING
L–W
G
B
J16 Junction Connector
IC4
TAIL Relay
TOWING TAIL Relay
TAIL
+B
STOP
GND
BRK
T 6 Towing Brake Controller
IE1
1E
TRLY
Body ECU
IB2
BG1
BF1
T15 Trailer Socket
BRK
BATT
B/UP
GND
STTR
STTL
J14(A), J15(B) Junction Connector
J5 Junction Connector
IG
BO
BL
L–Y
L–B
J39 Junction Connector
RTIN
LTIN
T14 Towing Converter Relay
RTOT
LTOT
STIN
J41(B) Junction Connector
J40(A), J41(B) Junction Connector
G–Y
B–R
R–Y
Y–R(∗2)
Y–R(∗1)

∗ 1 : w/ Daytime Running Light
∗ 2 : w/o Daytime Running Light

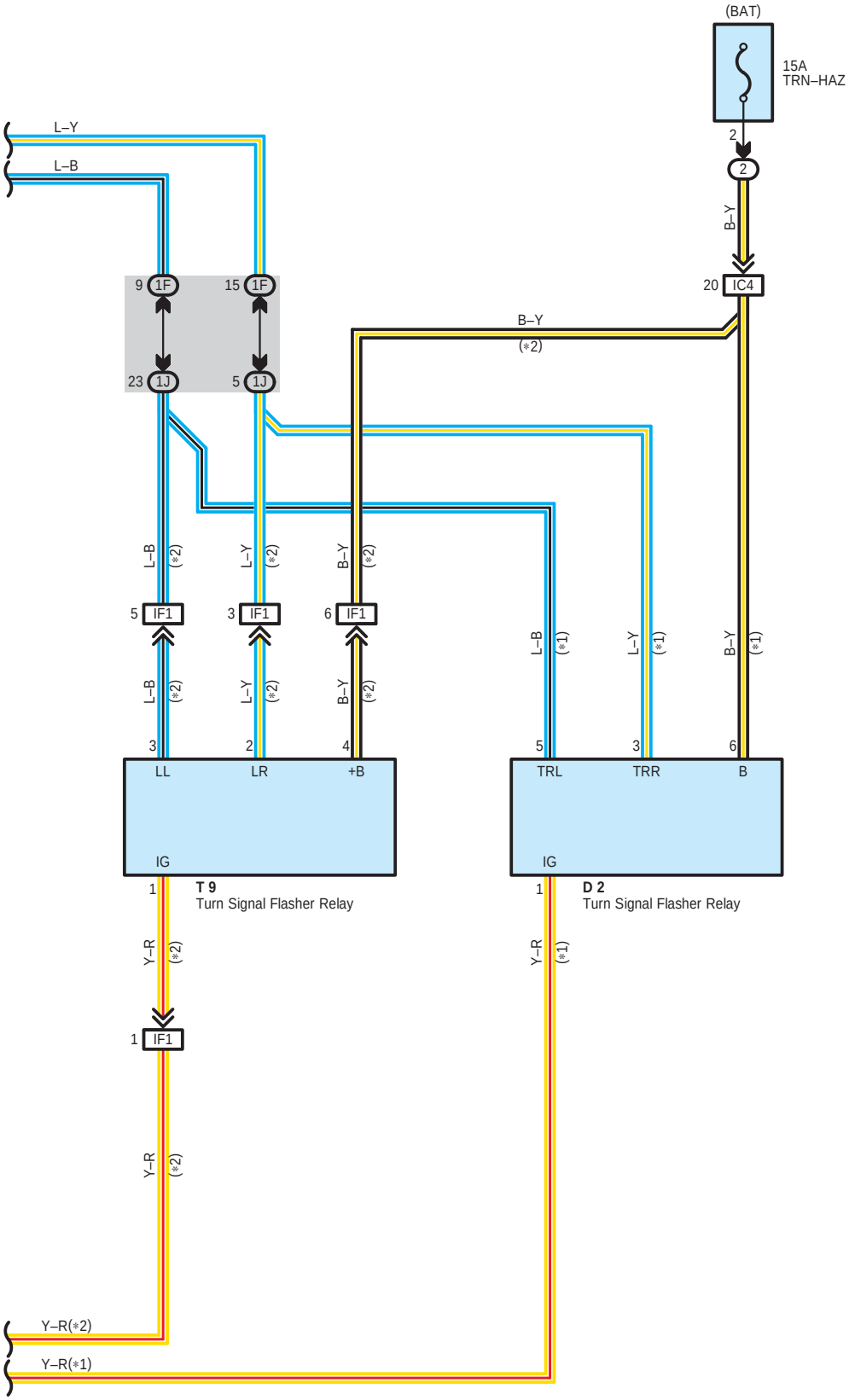

: Parts Location

Code	See Page	Code	See Page	Code	See Page
D2	37	J14 A	38	P1	33 (2UZ–FE)
J1	33 (2UZ–FE)	J15 B	38		35 (1GR–FE)
	35 (1GR–FE)	J16	38	S12	39
J2 A	33 (2UZ–FE)	J20 A	38	S28	33 (2UZ–FE)
	35 (1GR–FE)	J21 B	38		35 (1GR–FE)
J3 B	33 (2UZ–FE)	J25	38	T6	39
	35 (1GR–FE)	J33	38	T9	39
J4	38	J39	40	T14	41
J5	38	J40 A	40	T15	41
J7	38	J41 B	40		

: Relay Blocks

Code	See Page	Relay Blocks (Relay Block Location)
2	22	Engine Room R/B (Engine Compartment Left)
3	23	Engine Room R/B No.3 (Engine Compartment Left)

: Junction Block and Wire Harness Connector

Code	See Page	Junction Block and Wire Harness (Connector Location)
1C	24	Engine Room Main Wire and Driver Side J/B (Lower Finish Panel)
1E		
1F	24	Floor No.2 Wire and Driver Side J/B (Lower Finish Panel)
1J	25	Instrument Panel Wire and Driver Side J/B (Lower Finish Panel)
1L		

: Connector Joining Wire Harness and Wire Harness

Code	See Page	Joining Wire Harness and Wire Harness (Connector Location)
IB2	46	Floor No.2 Wire and Engine Room Main Wire (Left Kick Panel)
IC4	46	Instrument Panel Wire and Engine Room Main Wire (Left Kick Panel)
IE1	46	Instrument Panel Wire and Floor No.2 Wire (Left Kick Panel)
IF1	46	Instrument Panel Wire and Relay Wire (Behind the Instrument Panel J/B)
IM1	47	Engine Wire and Instrument Panel Wire (Right Side of Blower Unit)
BF1	48	Frame No.3 Wire and Floor No.2 Wire (Rear Side of Side Frame LH)
BG1	48	Floor No.2 Wire and Frame No.3 Wire (Rear Side of Side Frame LH)

: Ground Points

Code	See Page	Ground Points Location
EB	44 (2UZ–FE)	Front Left Fender
	45 (1GR–FE)	
IG	46	Left Kick Panel
BL	48	Floor Seat Crossmember LH
BO	48	Rear Pillar LH

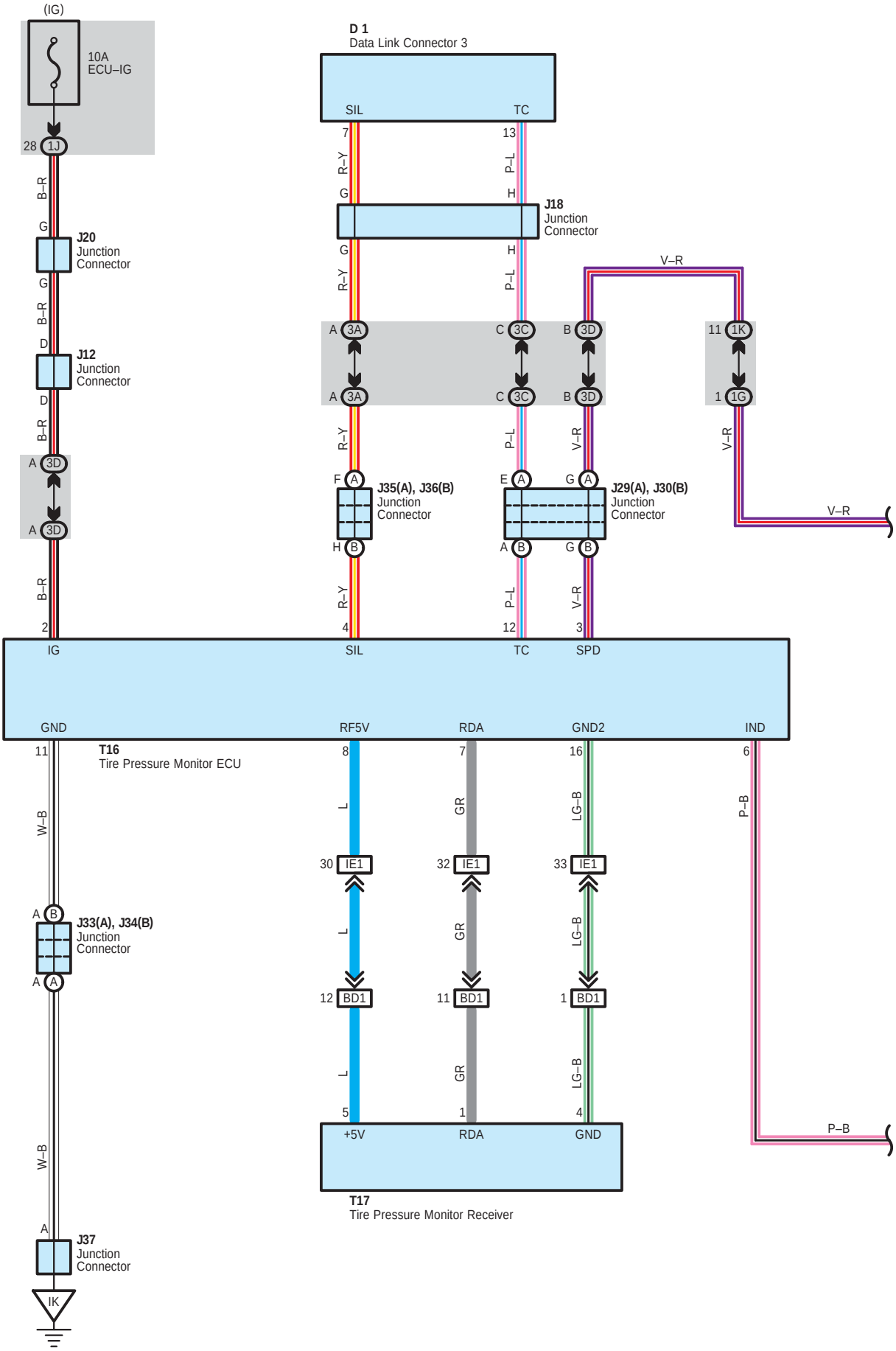
(IG)
10A
ECU–IG
28 1J
B–R
G
J20
Junction
Connector
G
B–R
D
J12
Junction
Connector
D
B–R
A 3D
A 3D
B–R
2
IG
D 1
Data Link Connector 3
SIL
TC
7
13
R–Y
P–L
G
H
J18
Junction
Connector
G
H
R–Y
P–L
V–R
A 3A
C 3C
B 3D
11 1K
A 3A
C 3C
B 3D
1 1G
R–Y
P–L
V–R
V–R
F A
J35(A), J36(B)
Junction
Connector
H B
E A
G A
J29(A), J30(B)
Junction
Connector
A B
G B
V–R
R–Y
P–L
V–R
4
12
3
IG
SIL
TC
SPD
GND
RF5V
RDA
GND2
IND
11
8
7
16
6
T16
Tire Pressure Monitor ECU
W–B
L
GR
LG–B
P–B
30 IE1
32 IE1
33 IE1
A B
J33(A), J34(B)
Junction
Connector
A A
L
GR
LG–B
12 BD1
11 BD1
1 BD1
L
GR
LG–B
5
1
4
W–B
+5V
RDA
GND
P–B
T17
Tire Pressure Monitor Receiver
A
J37
Junction
Connector
IK

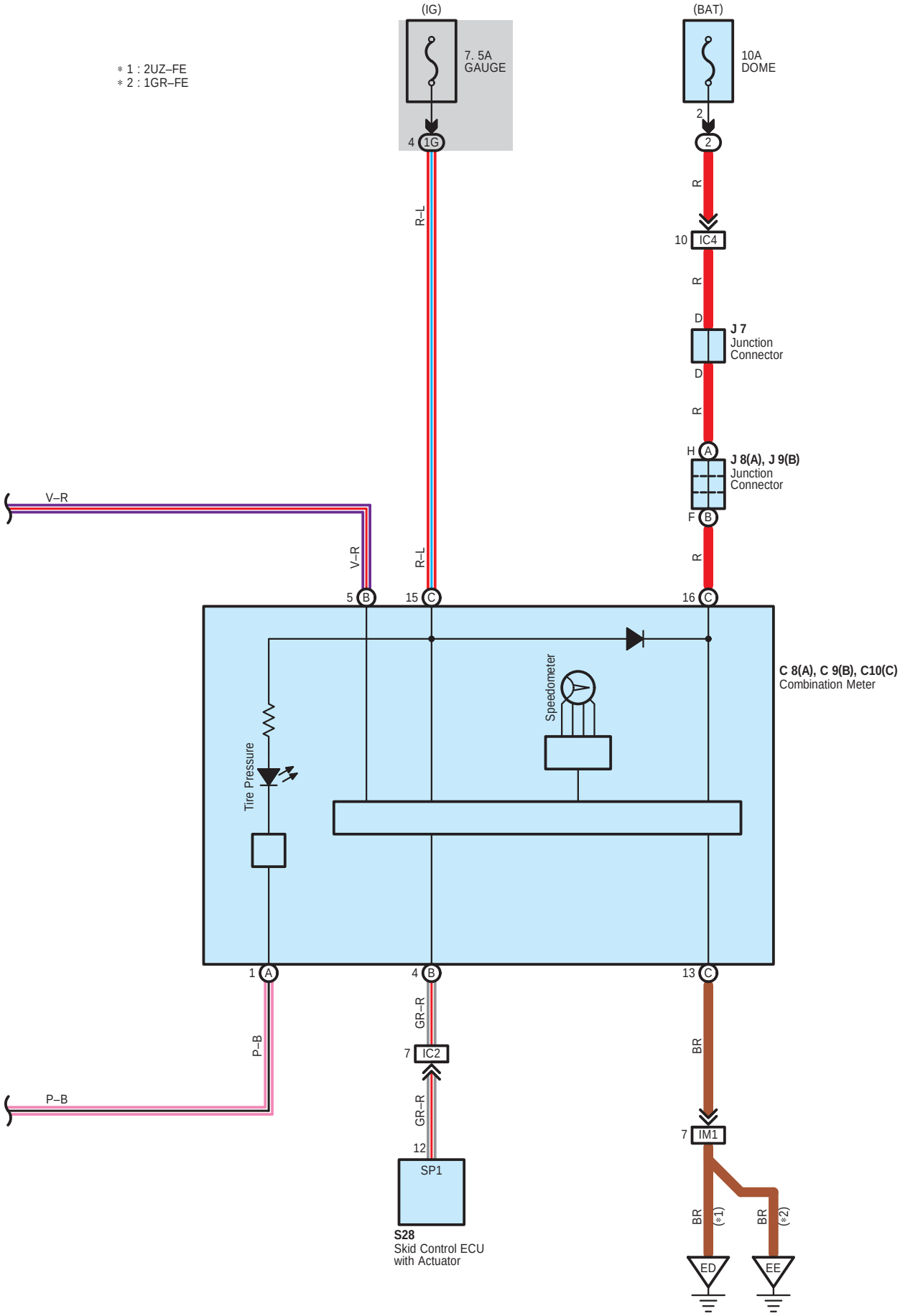
(IG)
(BAT)
* 1 : 2UZ–FE
* 2 : 1GR–FE
7. 5A
GAUGE
10A
DOME
4
1G
2
2
R
R–L
10
IC4
R
D
J 7
Junction
Connector
D
R
H
A
J 8(A), J 9(B)
Junction
Connector
F
B
R
V–R
V–R
R–L
5
B
15
C
16
C
C 8(A), C 9(B), C10(C)
Combination Meter
Speedometer
Tire Pressure
1
A
4
B
13
C
GR–R
BR
P–B
7
IC2
7
IM1
P–B
GR–R
12
SP1
BR
(*1)
BR
(*2)
S28
Skid Control ECU
with Actuator
ED
EE

Tire Pressure Warning System

System Outline

The air pressure sensor installed in the tire wheel detects the tire air pressure and transmits signals to the vehicle side receiver. When the detected tire air pressure is below a specified level, the warning light in the combination meter comes on to inform the driver.

Warnings when the tire pressure is low

* When the tire air pressure is below a specified level, the warning light in the combination meter comes on.

: Parts Location

Code		See Page	Code		See Page	Code		See Page
C8	A	37	J12		38	J35	A	38
C9	B	37	J18		38	J36	B	38
C10	C	37	J20		38	J37		38
D1		37	J29	A	38	S28		33 (2UZ–FE)
J7		38	J30	B	38			35 (1GR–FE)
J8	A	38	J33	A	38	T16		39
J9	B	38	J34	B	38	T17		41

: Relay Blocks

Code	See Page	Relay Blocks (Relay Block Location)
2	22	Engine Room R/B (Engine Compartment Left)

: Junction Block and Wire Harness Connector

Code	See Page	Junction Block and Wire Harness (Connector Location)
1G	25	Instrument Panel Wire and Driver Side J/B (Lower Finish Panel)
1J		
1K		
3A	28	Instrument Panel Wire and Center J/B (Instrument Panel Brace RH)
3C		
3D		

: Connector Joining Wire Harness and Wire Harness

Code	See Page	Joining Wire Harness and Wire Harness (Connector Location)
IC2	46	Instrument Panel Wire and Engine Room Main Wire (Left Kick Panel)
IC4		
IE1	46	Instrument Panel Wire and Floor No.2 Wire (Left Kick Panel)
IM1	47	Engine Wire and Instrument Panel Wire (Right Side of Blower Unit)
BD1	48	Back Door No.1 Wire and Floor No.2 Wire (Left Rear Side of Roof)

: Ground Points

Code	See Page	Ground Points Location
ED	44 (2UZ–FE)	Left Bank Cylinder Head
EE	44 (2UZ–FE)	Rear Side of Cylinder Block
	45 (1GR–FE)	Rear Side of Right Bank Cylinder Block
IK	46	Right Kick Panel

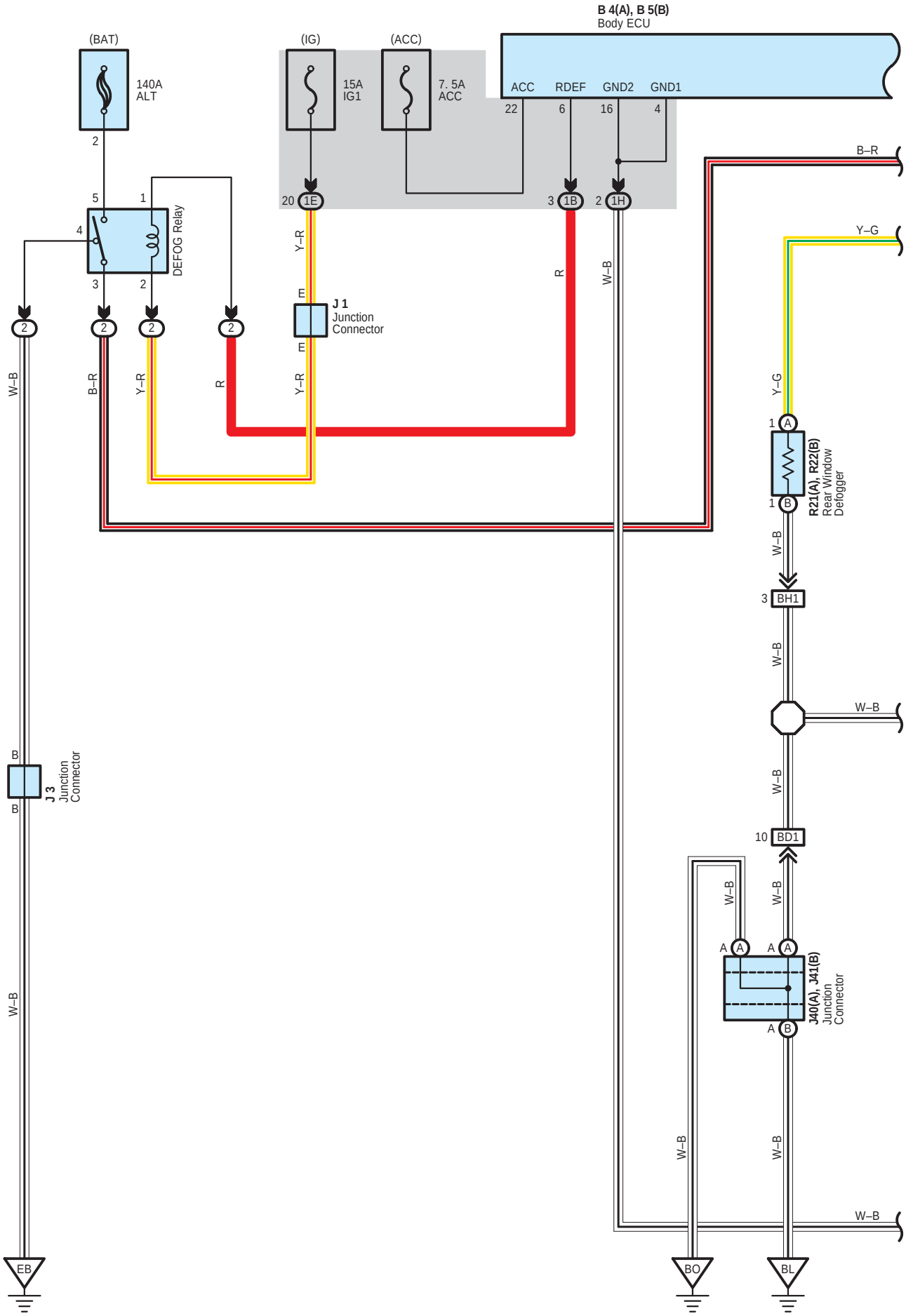
B 4(A), B 5(B)
Body ECU
(BAT)
(IG)
(ACC)
140A
ALT
15A
IG1
7. 5A
ACC
ACC
RDEF
GND2
GND1
22
6
16
4
20 1E
3 1B
2 1H
DEFOG Relay
J 1
Junction
Connector
J 3
Junction
Connector
R21(A), R22(B)
Rear Window
Defogger
BH1
BD1
J40(A), J41(B)
Junction
Connector
EB
BO
BL
B–R
Y–G
W–B
Y–R
R

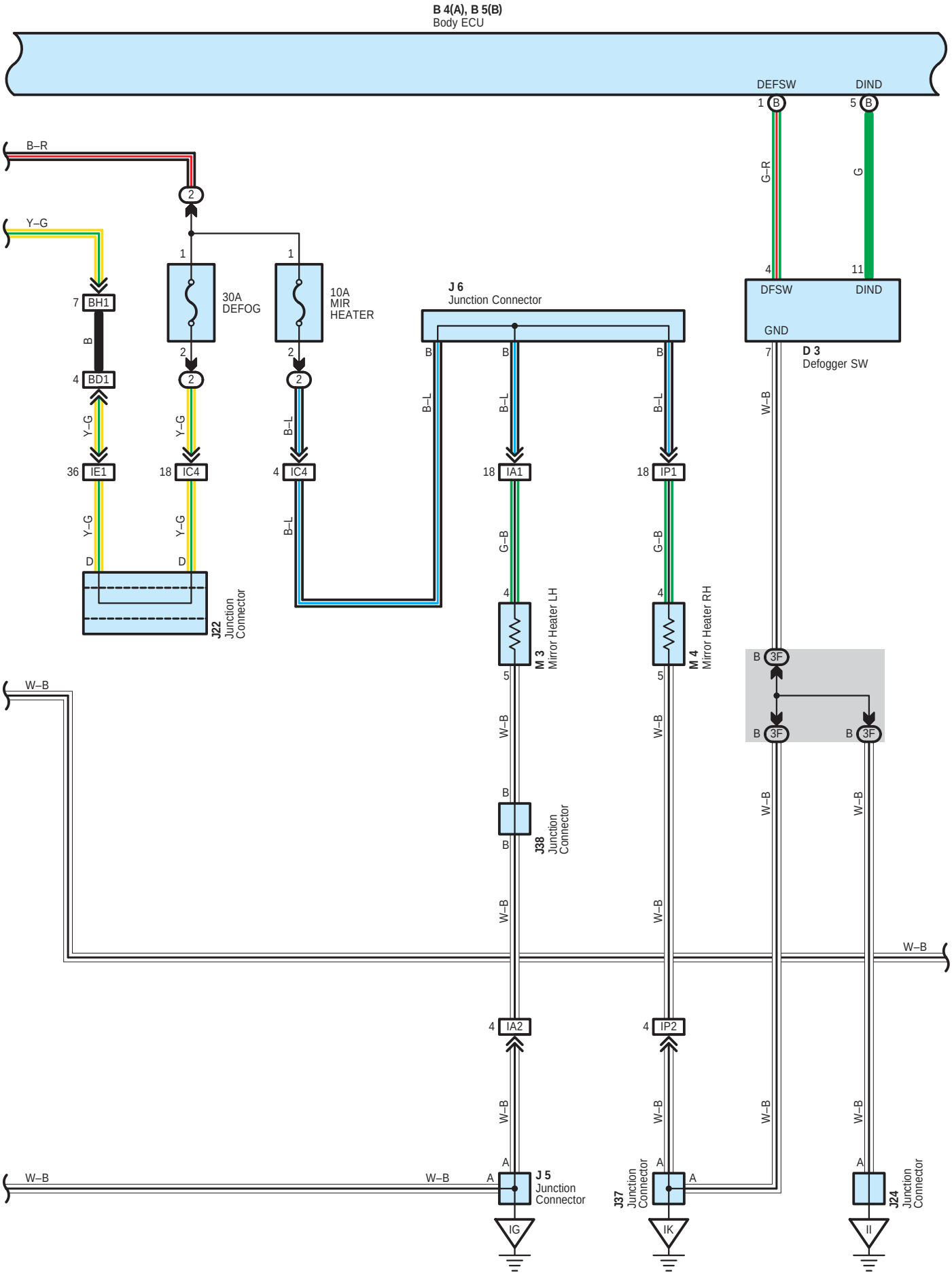
B 4(A), B 5(B)
Body ECU
DEFSW
DIND
B–R
Y–G
30A
DEFOG
10A
MIR
HEATER
J 6
Junction Connector
G–R
G
DFSW
DIND
GND
D 3
Defogger SW
W–B
B–L
G–B
M 3
Mirror Heater LH
M 4
Mirror Heater RH
J22
Junction
Connector
J38
Junction
Connector
J 5
Junction
Connector
J37
Junction
Connector
J24
Junction
Connector
BH1
BD1
IE1
IC4
IA1
IP1
IA2
IP2
3F
IG
IK
II

Rear Window Defogger and Mirror Heater

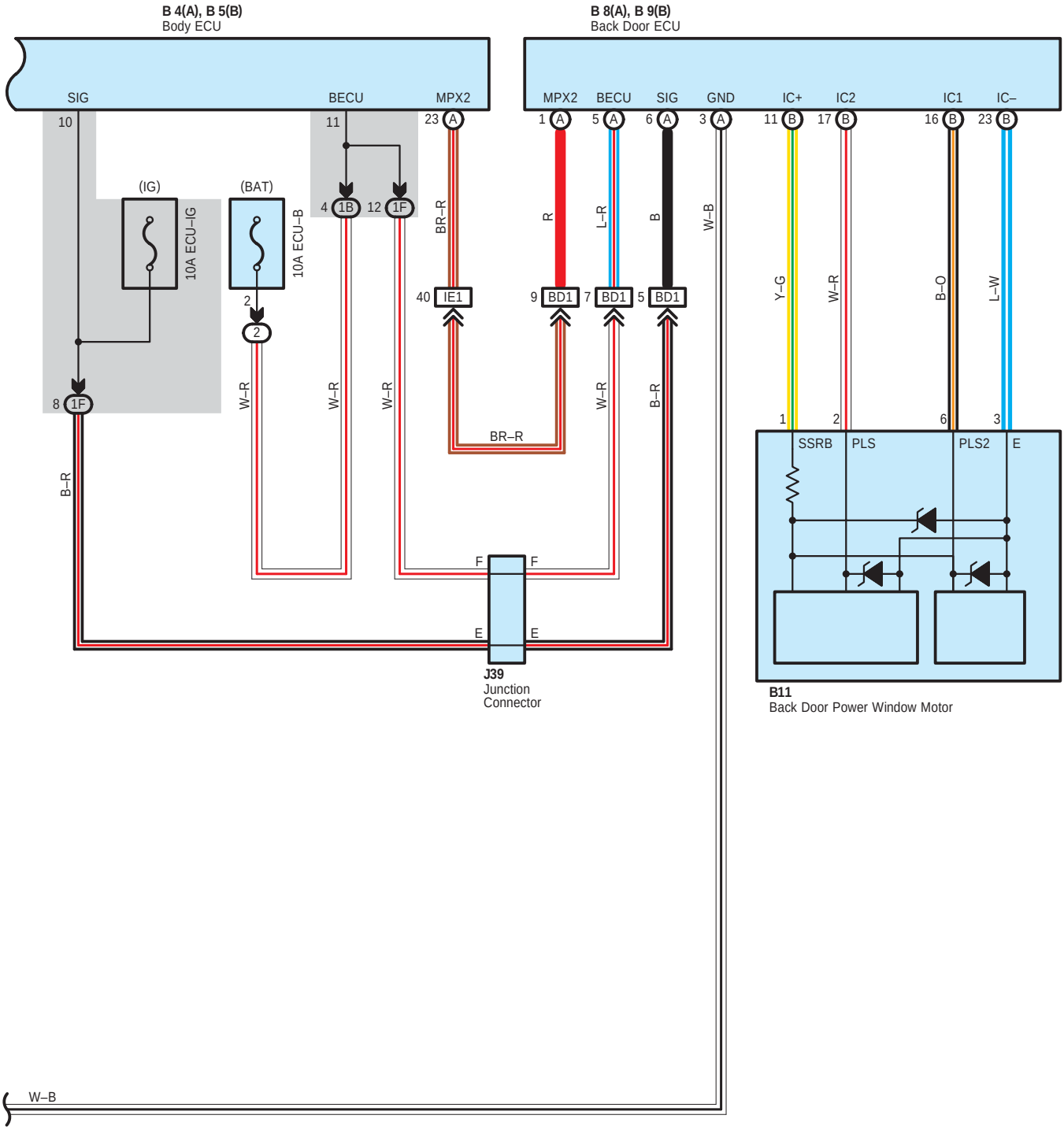

System Outline

* Start control
  Turning the rear window defogger SW ON, with the ignition SW ON and the back door window fully closed, initiates operation of the rear window defogger and illuminates the indicator lamp for 15 minutes.
* Stop control
  When any one of the following conditions exists, rear window defogger operation comes to a stop and the indicator lamp goes out.
  * The ignition SW is turned from the ON position to either the ACC or OFF position.
  * The rear window defogger SW is pressed ON again when rear window defogger operation is already under way.
  * The back door window is open.

: Parts Location

Code		See Page	Code	See Page	Code		See Page
B4	A	36	J3	33 (2UZ–FE)	J39		40
B5	B	36		35 (1GR–FE)	J40	A	40
B8	A	40	J5	38	J41	B	40
B9	B	40	J6	38	M3		41
B11		40	J22	38	M4		41
D3		37	J24	38	R21	A	41
J1		33 (2UZ–FE)	J37	38	R22	B	41
		35 (1GR–FE)	J38	40			

: Relay Blocks

Code	See Page	Relay Blocks (Relay Block Location)
2	22	Engine Room R/B (Engine Compartment Left)

: Junction Block and Wire Harness Connector

Code	See Page	Junction Block and Wire Harness (Connector Location)
1B	24	Engine Room Main Wire and Driver Side J/B (Lower Finish Panel)
1E		
1F	24	Floor No.2 Wire and Driver Side J/B (Lower Finish Panel)
1H	25	Instrument Panel Wire and Driver Side J/B (Lower Finish Panel)
3F	28	Instrument Panel Wire and Center J/B (Instrument Panel Brace RH)

: Connector Joining Wire Harness and Wire Harness

Code	See Page	Joining Wire Harness and Wire Harness (Connector Location)
IA1	46	Front Door LH Wire and Instrument Panel Wire (Left Kick Panel)
IA2		
IC4	46	Instrument Panel Wire and Engine Room Main Wire (Left Kick Panel)
IE1	46	Instrument Panel Wire and Floor No.2 Wire (Left Kick Panel)
IP1	47	Front Door RH Wire and Instrument Panel Wire (Right Kick Panel)
IP2		
BD1	48	Back Door No.1 Wire and Floor No.2 Wire (Left Rear Side of Roof)
BH1	48	Back Door No.1 Wire and Back Door No.2 Wire (Left Side of Back Door)

: Ground Points

Code	See Page	Ground Points Location
EB	44 (2UZ–FE)	Front Left Fender
	45 (1GR–FE)	
IG	46	Left Kick Panel
II	46	Instrument Panel Brace RH
IK	46	Right Kick Panel
BL	48	Floor Seat Crossmember LH
BO	48	Rear Pillar LH

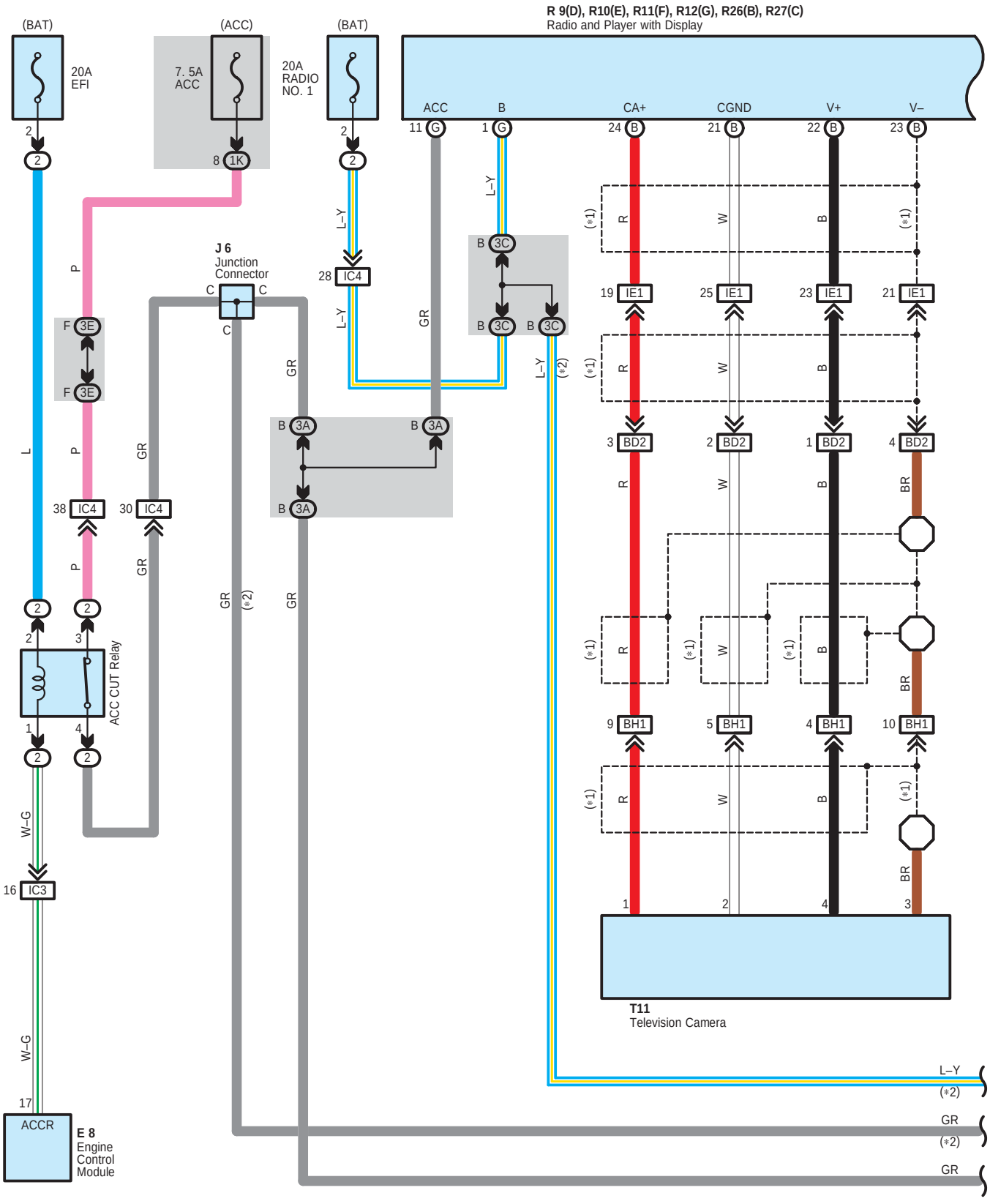
R 9(D), R10(E), R11(F), R12(G), R26(B), R27(C)
Radio and Player with Display
(BAT)
20A
EFI
(ACC)
7. 5A
ACC
(BAT)
20A
RADIO
NO. 1
ACC
B
CA+
CGND
V+
V–
J 6
Junction
Connector
ACC CUT Relay
T11
Television Camera
E 8
Engine
Control
Module
ACCR
L–Y
(*2)
GR
(*2)
GR

∗ 1 : Shielded
∗ 2 : w/ Rear Seat Entertainment System

R 9(D), R10(E), R11(F), R12(G), R26(B), R27(C)
Radio and Player with Display

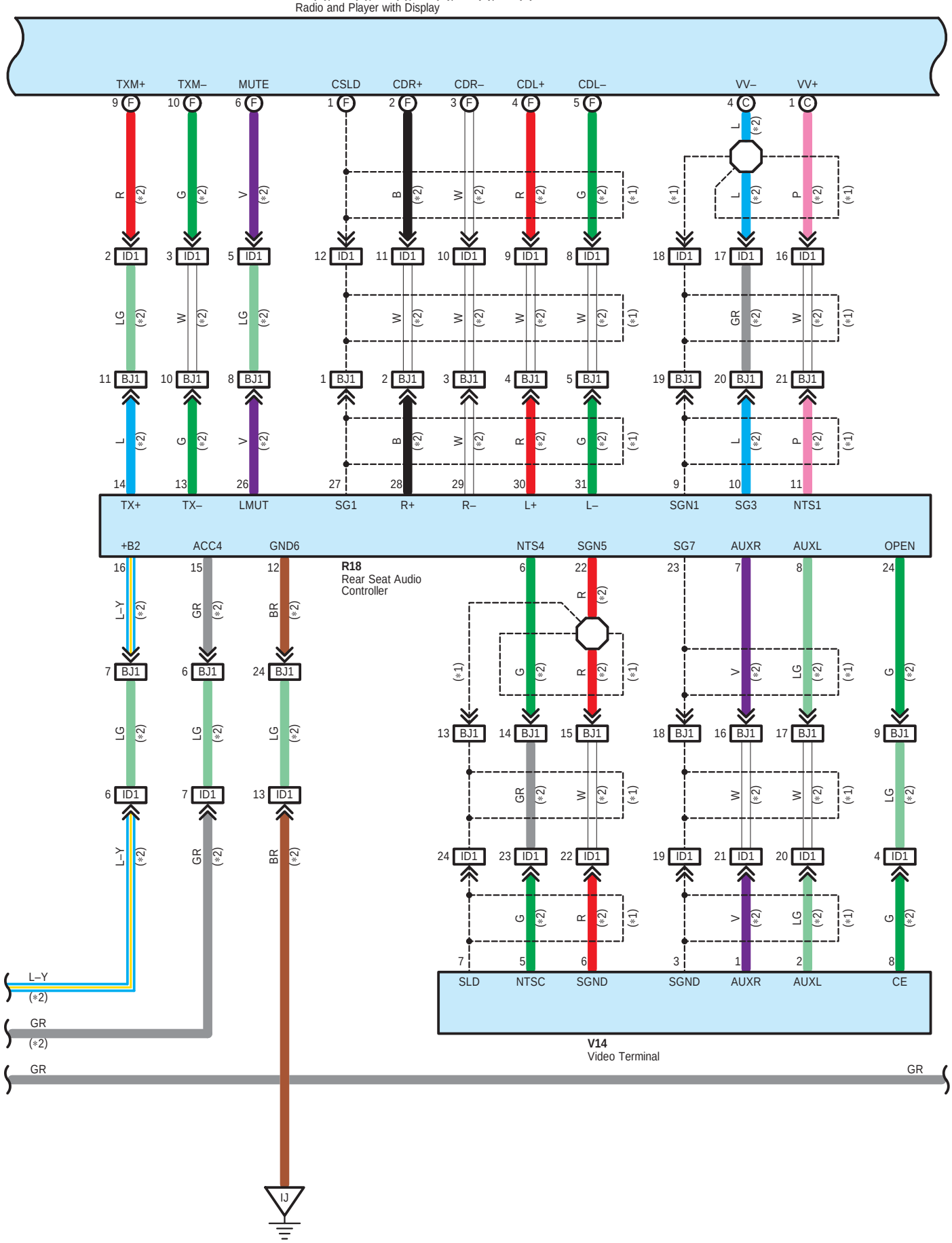

R 9(D), R10(E), R11(F), R12(G), R26(B), R27(C)
Radio and Player with Display

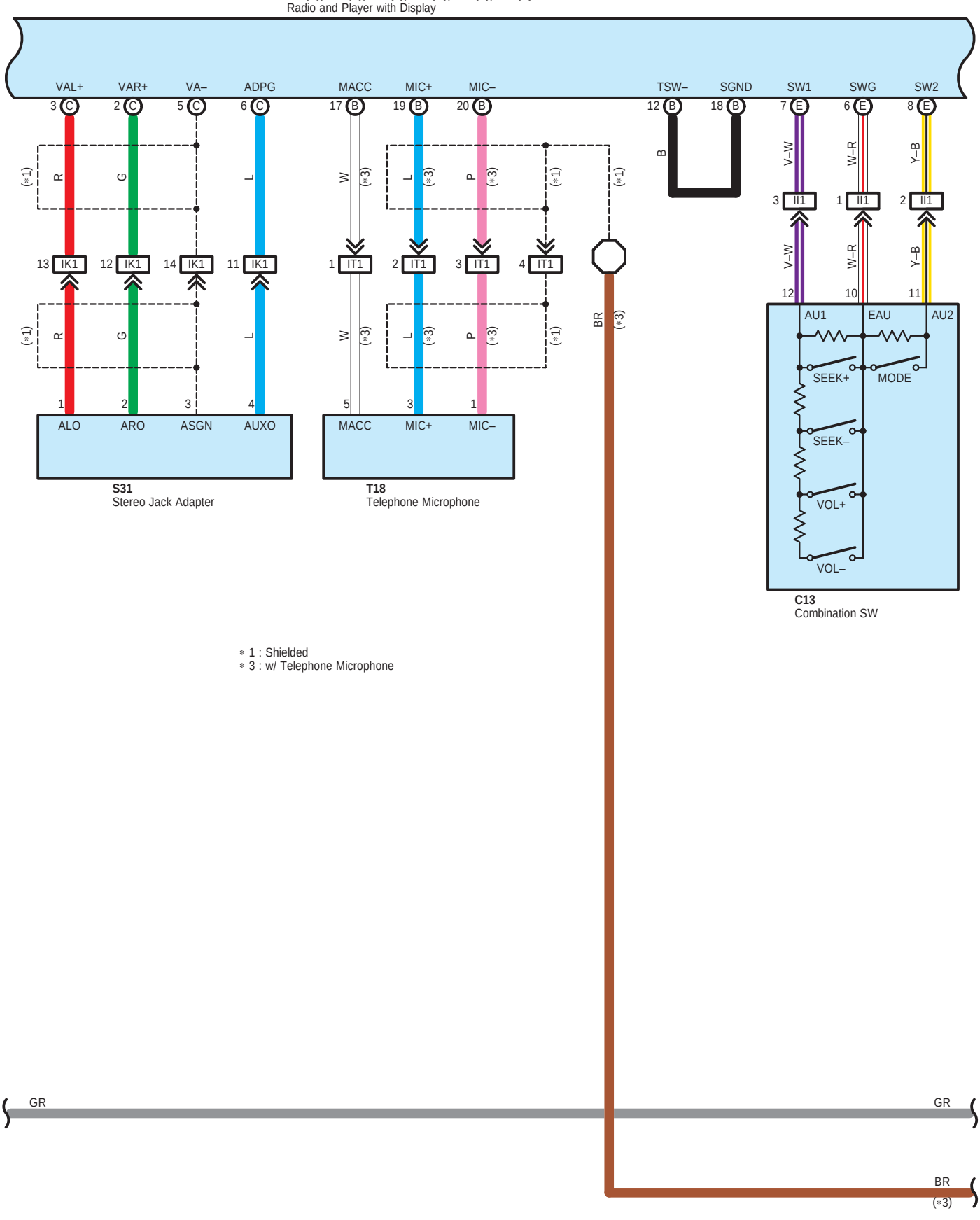

* 1 : Shielded
* 3 : w/ Telephone Microphone

R 9(D), R10(E), R11(F), R12(G), R26(B), R27(C)
Radio and Player with Display

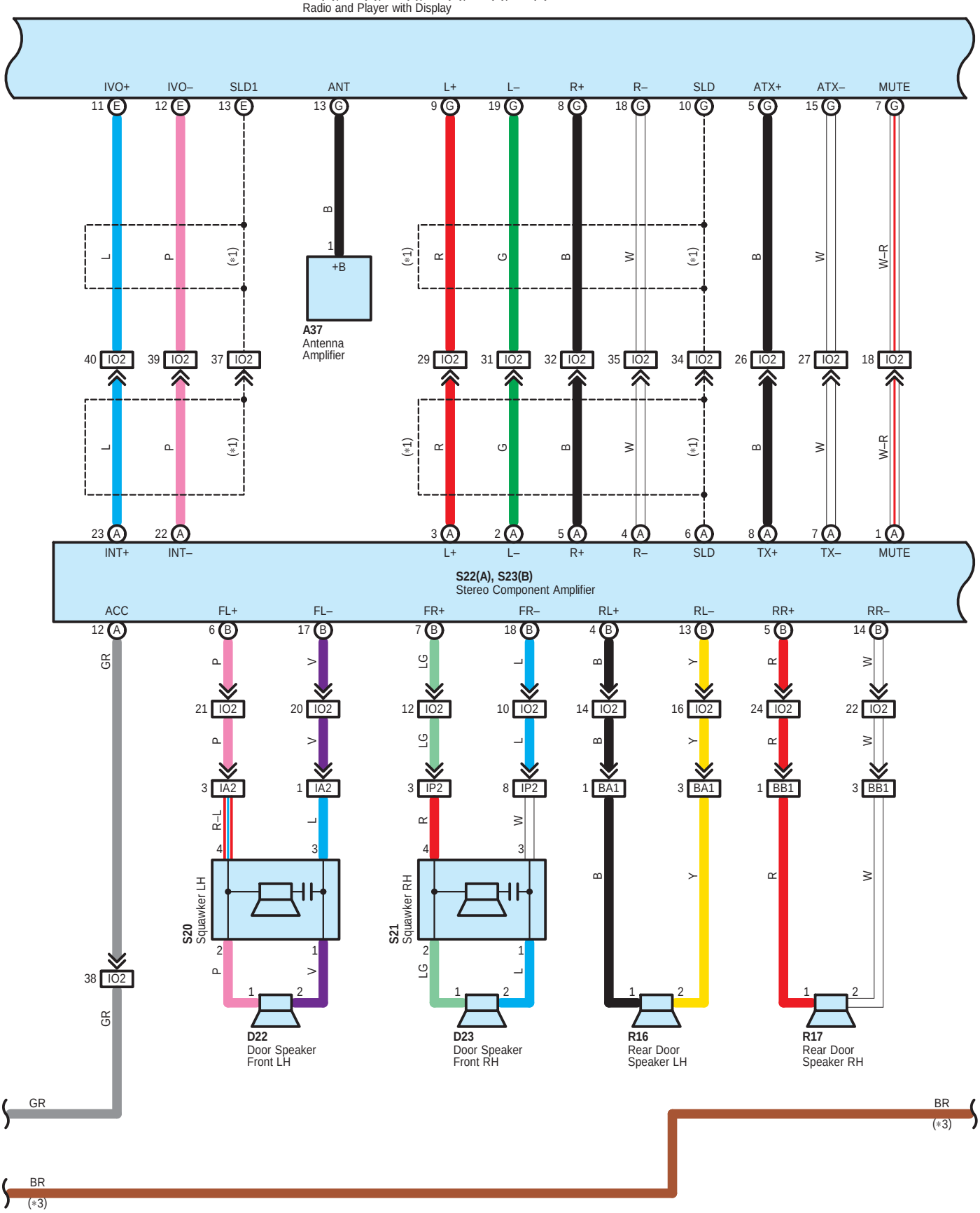

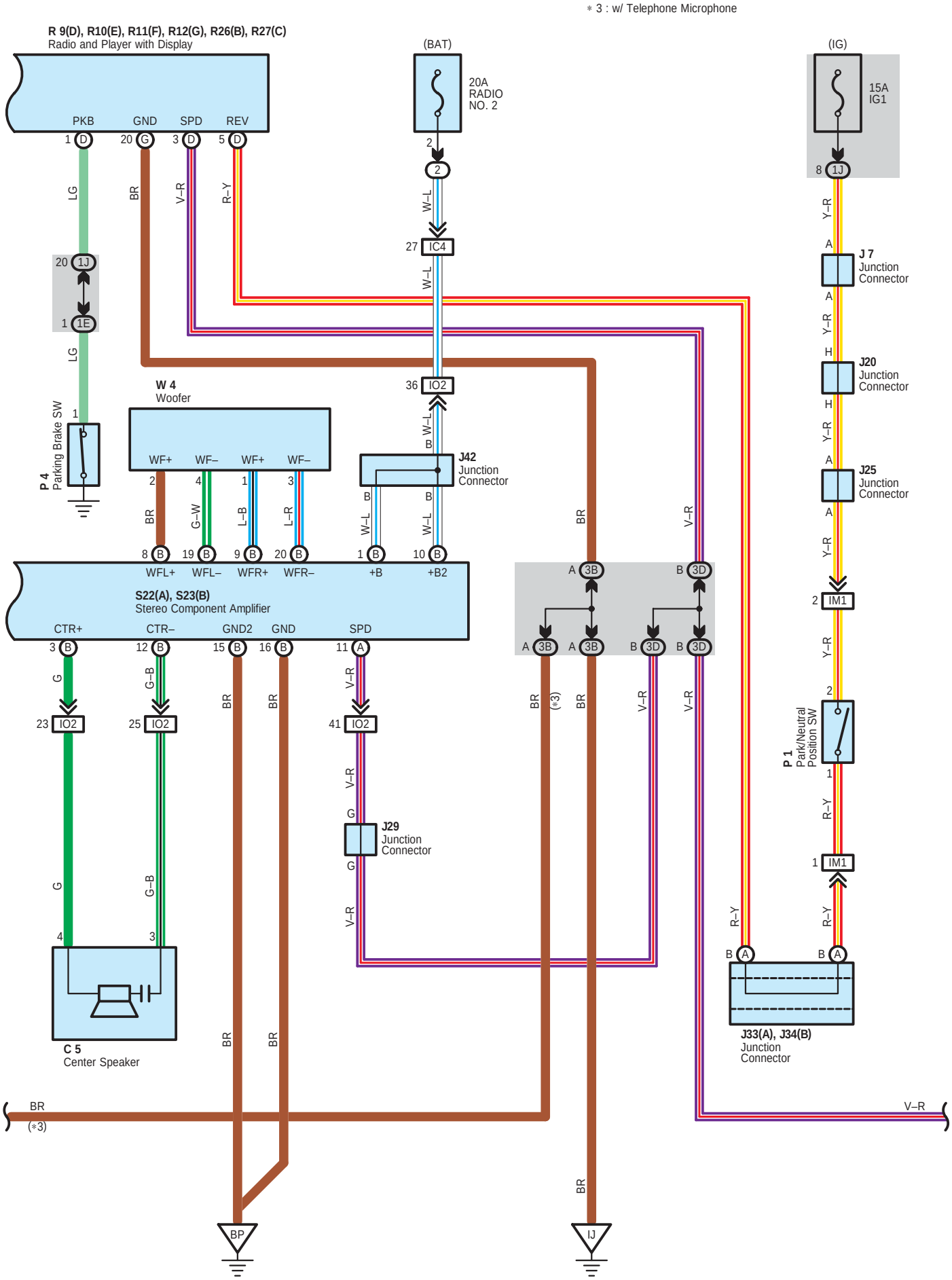
∗ 3 : w/ Telephone Microphone
R 9(D), R10(E), R11(F), R12(G), R26(B), R27(C)
Radio and Player with Display
PKB
GND
SPD
REV
(BAT)
20A
RADIO
NO. 2
(IG)
15A
IG1
J 7
Junction
Connector
J20
Junction
Connector
J25
Junction
Connector
W 4
Woofer
WF+
WF–
P 4
Parking Brake SW
J42
Junction
Connector
S22(A), S23(B)
Stereo Component Amplifier
CTR+
CTR–
GND2
GND
SPD
WFL+
WFL–
WFR+
WFR–
+B
+B2
J29
Junction
Connector
P 1
Park/Neutral
Position SW
J33(A), J34(B)
Junction
Connector
C 5
Center Speaker
BP
IJ

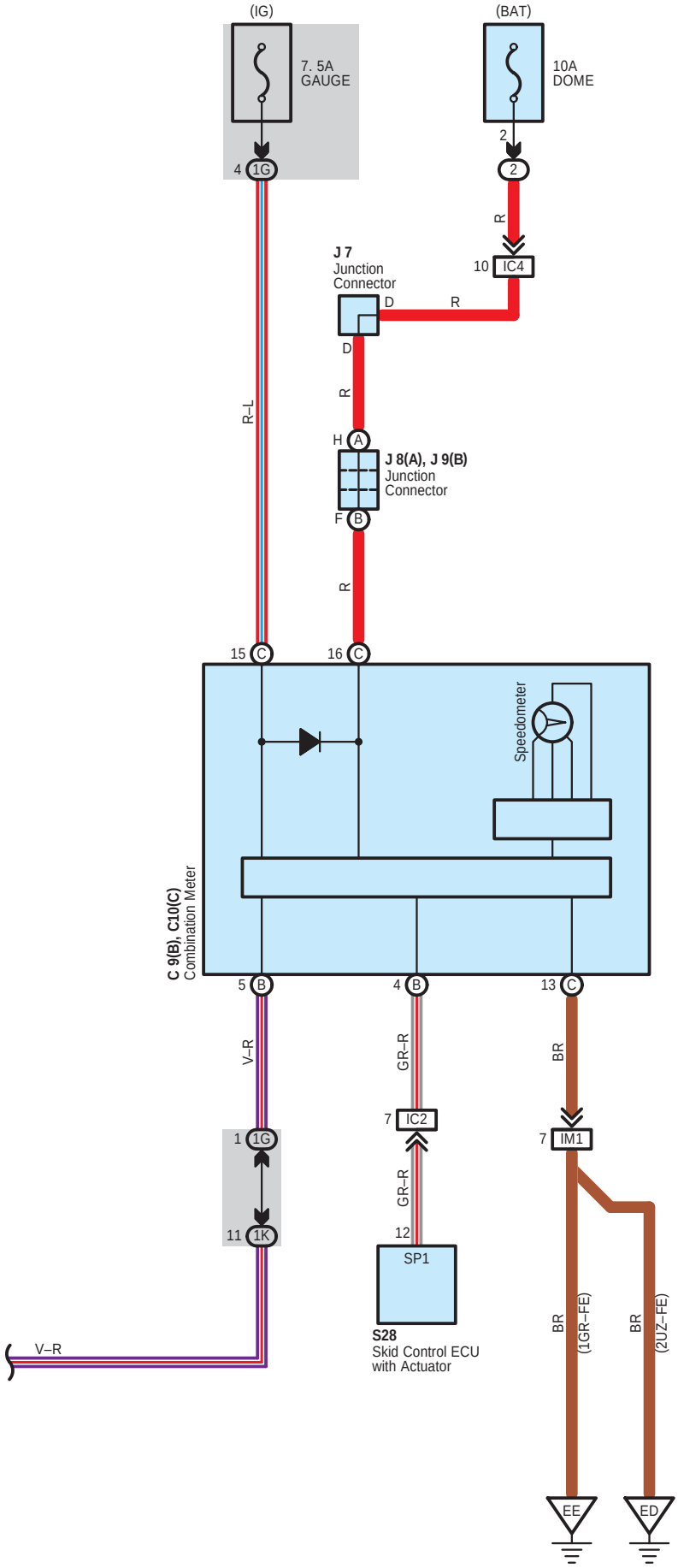
(IG)
7. 5A
GAUGE
4 1G
(BAT)
10A
DOME
2
2
R
10 IC4
J 7
Junction
Connector
D
R
D
R
R–L
H A
J 8(A), J 9(B)
Junction
Connector
F B
R
15 C
16 C
Speedometer
C 9(B), C10(C)
Combination Meter
5 B
4 B
13 C
V–R
GR–R
BR
7 IC2
7 IM1
1 1G
11 1K
GR–R
12
SP1
S28
Skid Control ECU
with Actuator
V–R
BR
(1GR–FE)
BR
(2UZ–FE)
EE
ED

: Parts Location

Code	See Page	Code	See Page	Code	See Page
A37	36	J29	38	R26 B	39
C5	37	J33 A	38	R27 C	39
C9 B	37	J34 B	38	S20	41
C10 C	37	J42	40	S21	41
C13	37	P1	33 (2UZ–FE)	S22 A	41
D22	40		35 (1GR–FE)	S23 B	41
D23	40	P4	39	S28	33 (2UZ–FE)
E8	37	R9 D	39		35 (1GR–FE)
J6	38	R10 E	39	S31	39
J7	38	R11 F	39	T11	41
J8 A	38	R12 G	39	T18	41
J9 B	38	R16	41	V14	39
J20	38	R17	41	W4	41
J25	38	R18	41		

: Relay Blocks

Code	See Page	Relay Blocks (Relay Block Location)
2	22	Engine Room R/B (Engine Compartment Left)

: Junction Block and Wire Harness Connector

Code	See Page	Junction Block and Wire Harness (Connector Location)
1E	24	Engine Room Main Wire and Driver Side J/B (Lower Finish Panel)
1G	25	Instrument Panel Wire and Driver Side J/B (Lower Finish Panel)
1J		
1K		
3A	28	Instrument Panel Wire and Center J/B (Instrument Panel Brace RH)
3B		
3C		
3D		
3E		

: Connector Joining Wire Harness and Wire Harness

Code	See Page	Joining Wire Harness and Wire Harness (Connector Location)
IA2	46	Front Door LH Wire and Instrument Panel Wire (Left Kick Panel)
IC2	46	Instrument Panel Wire and Engine Room Main Wire (Left Kick Panel)
IC3		
IC4		
ID1	46	Radio Installation Wiring Sub Assembly and Instrument Panel Wire (Left Kick Panel)
IE1	46	Instrument Panel Wire and Floor No.2 Wire (Left Kick Panel)
II1	46	Instrument Panel Wire and Instrument Panel Wire (Instrument Panel Brace LH)
IK1	47	Instrument Panel Wire and Instrument Panel Wire (Left Upper Side of the Glove Box)
IM1	47	Engine Wire and Instrument Panel Wire (Right Side of Blower Unit)
IO2	47	Instrument Panel Wire and Floor Wire (Right Kick Panel)
IP2	47	Front Door RH Wire and Instrument Panel Wire (Right Kick Panel)
IT1	47	Roof Wire and Instrument Panel Wire (Left Kick Panel)
BA1	48	Rear Door No.2 Wire and Instrument Panel Wire (Left Center Pillar)
BB1	48	Rear Door No.1 Wire and Instrument Panel Wire (Right Center Pillar)
BD2	48	Back Door No.1 Wire and Floor No.2 Wire (Left Rear Side of Roof)
BH1	48	Back Door No.1 Wire and Back Door No.2 Wire (Left Side of Back Door)
BJ1	48	Radio Installation Wiring Sub Assembly and Radio Installation Wiring Sub Assembly (Center of Roof)

▽ : **Ground Points**

Code	See Page	Ground Points Location
ED	44 (2UZ–FE)	Left Bank Cylinder Head
EE	44 (2UZ–FE)	Rear Side of Cylinder Block
	45 (1GR–FE)	Rear Side of Right Bank Cylinder Block
IJ	46	Instrument Panel Brace RH
BP	48	Rear Pillar RH

Audio System with 10 Speaker

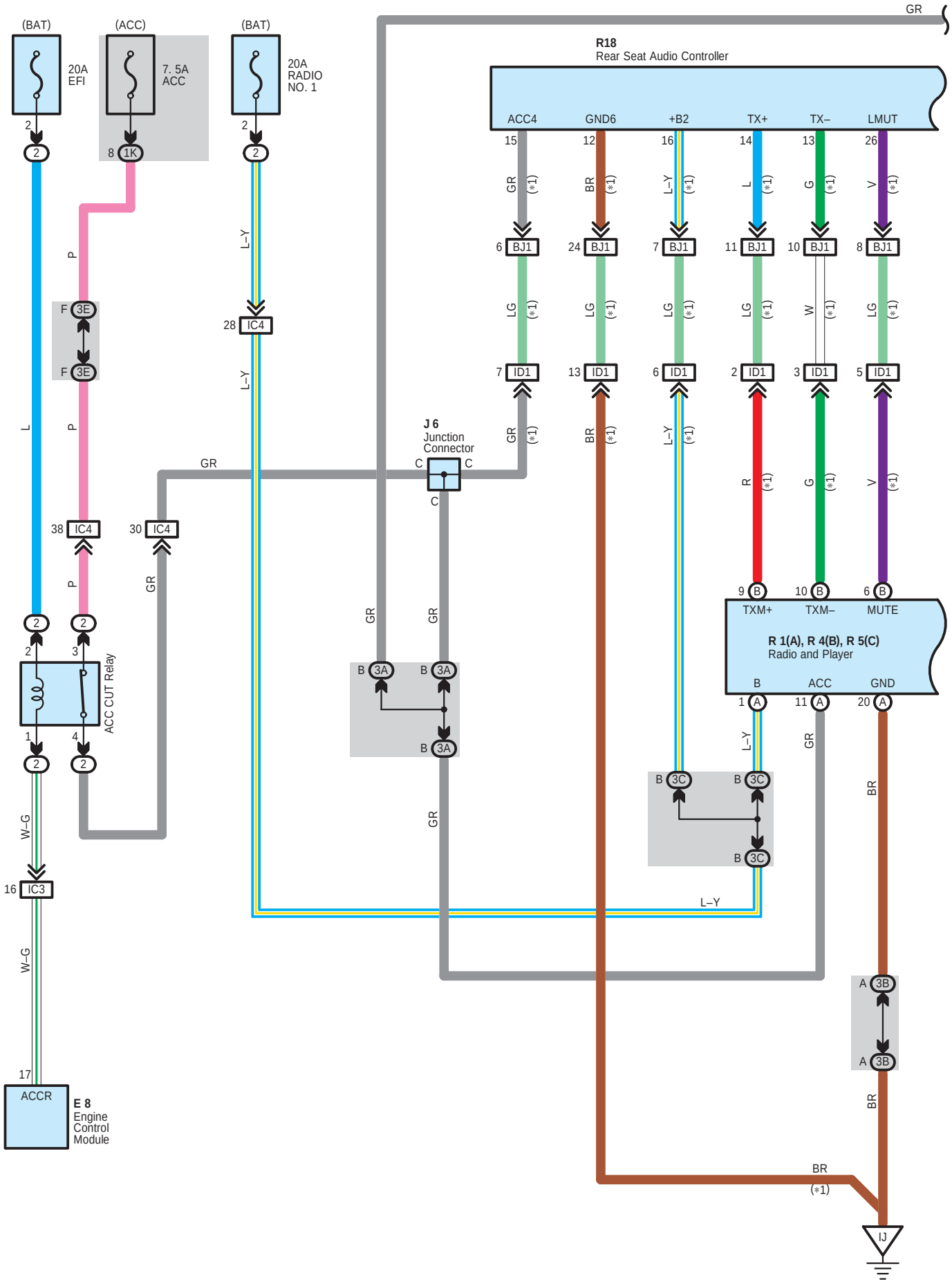

∗ 1 : w/ Rear Seat Entertainment System

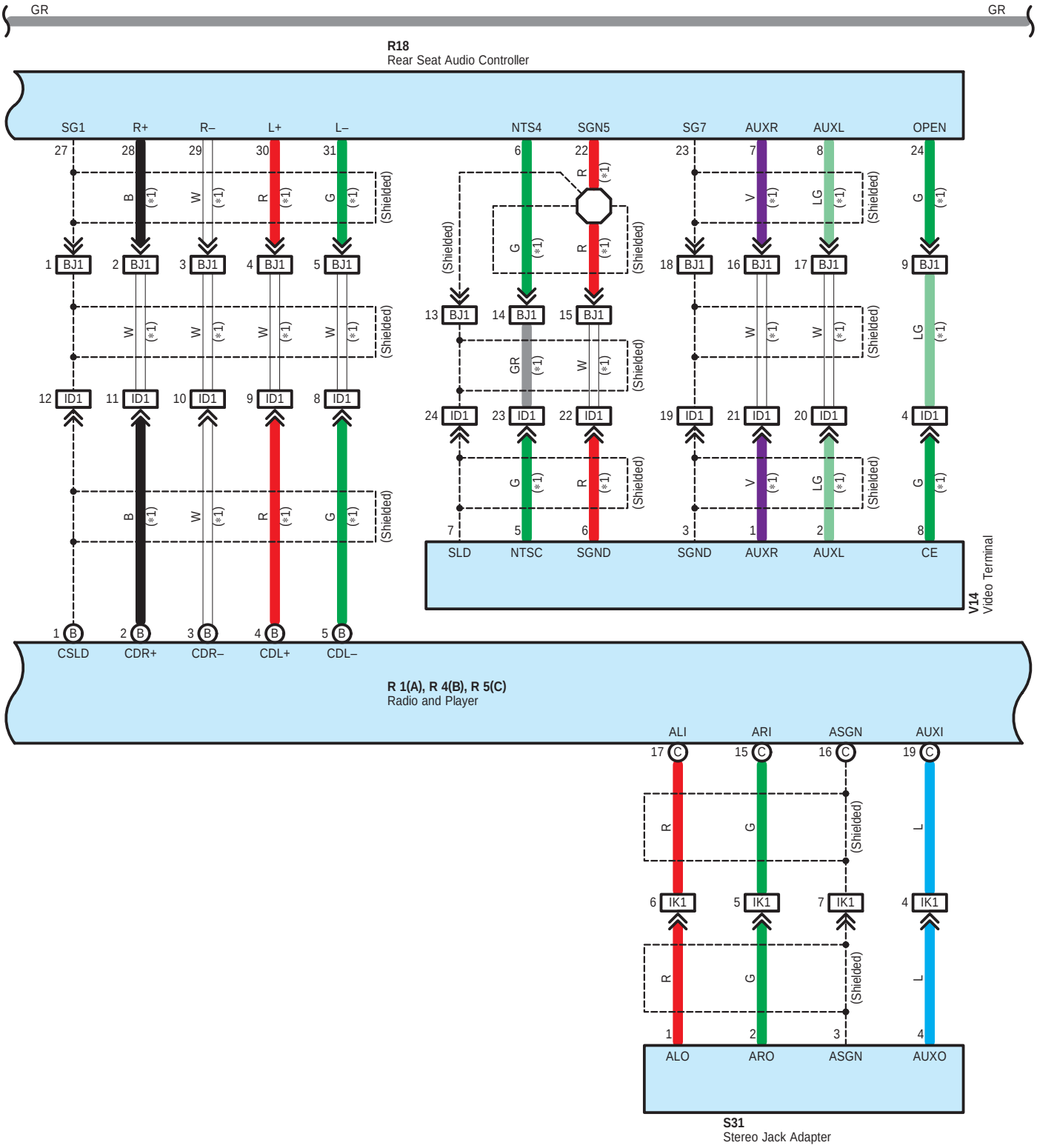

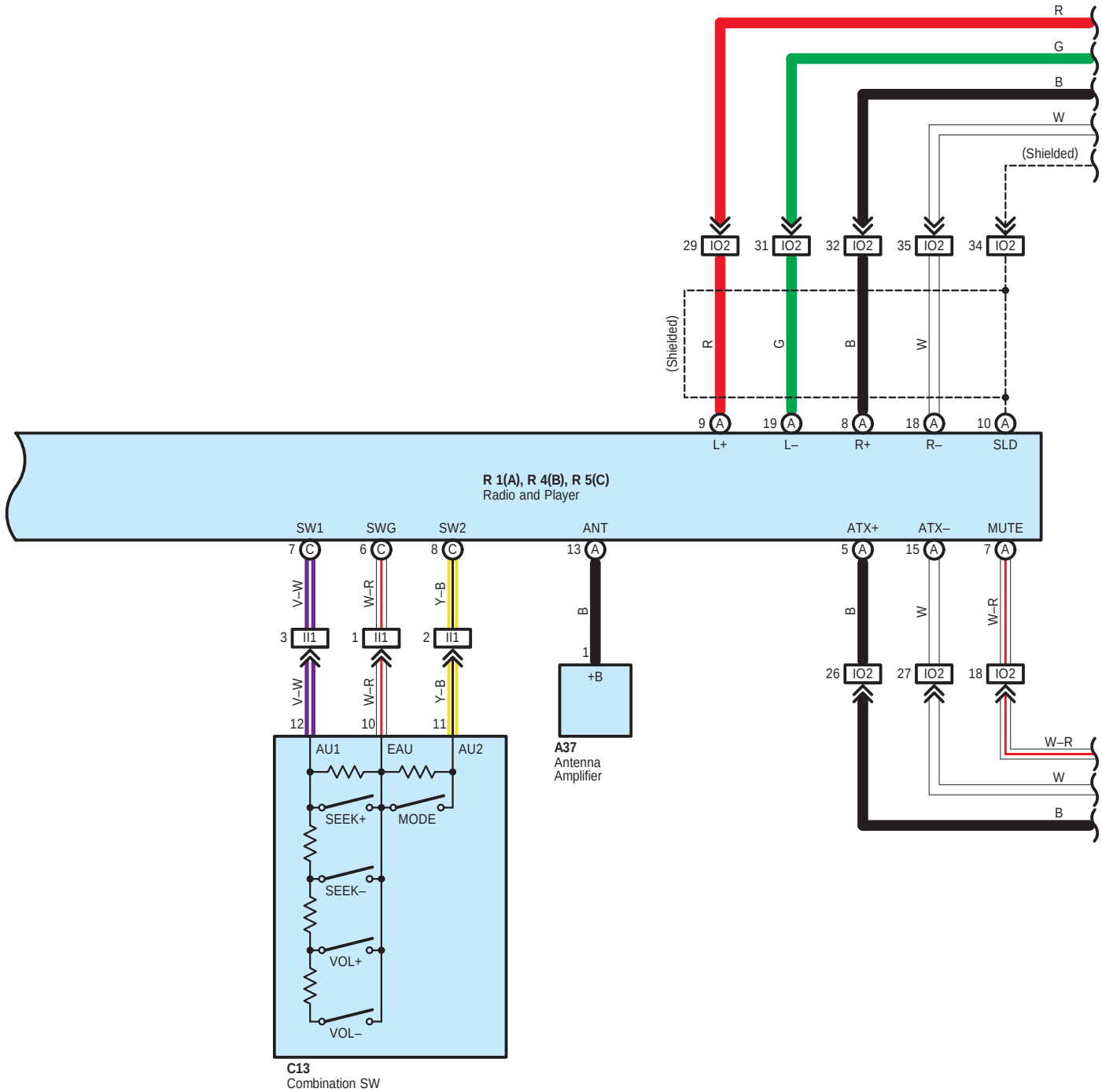
GR
GR
R
G
B
W
(Shielded)
29 IO2
31 IO2
32 IO2
35 IO2
34 IO2
(Shielded)
R
G
B
W
9 A
19 A
8 A
18 A
10 A
L+
L–
R+
R–
SLD
R 1(A), R 4(B), R 5(C)
Radio and Player
SW1
SWG
SW2
ANT
ATX+
ATX–
MUTE
7 C
6 C
8 C
13 A
5 A
15 A
7 A
V–W
W–R
Y–B
B
B
W
W–R
3 I1
1 I1
2 I1
1
26 IO2
27 IO2
18 IO2
V–W
W–R
Y–B
12
10
11
+B
W–R
W
B
AU1
EAU
AU2
SEEK+
MODE
SEEK–
VOL+
VOL–
A37
Antenna
Amplifier
C13
Combination SW

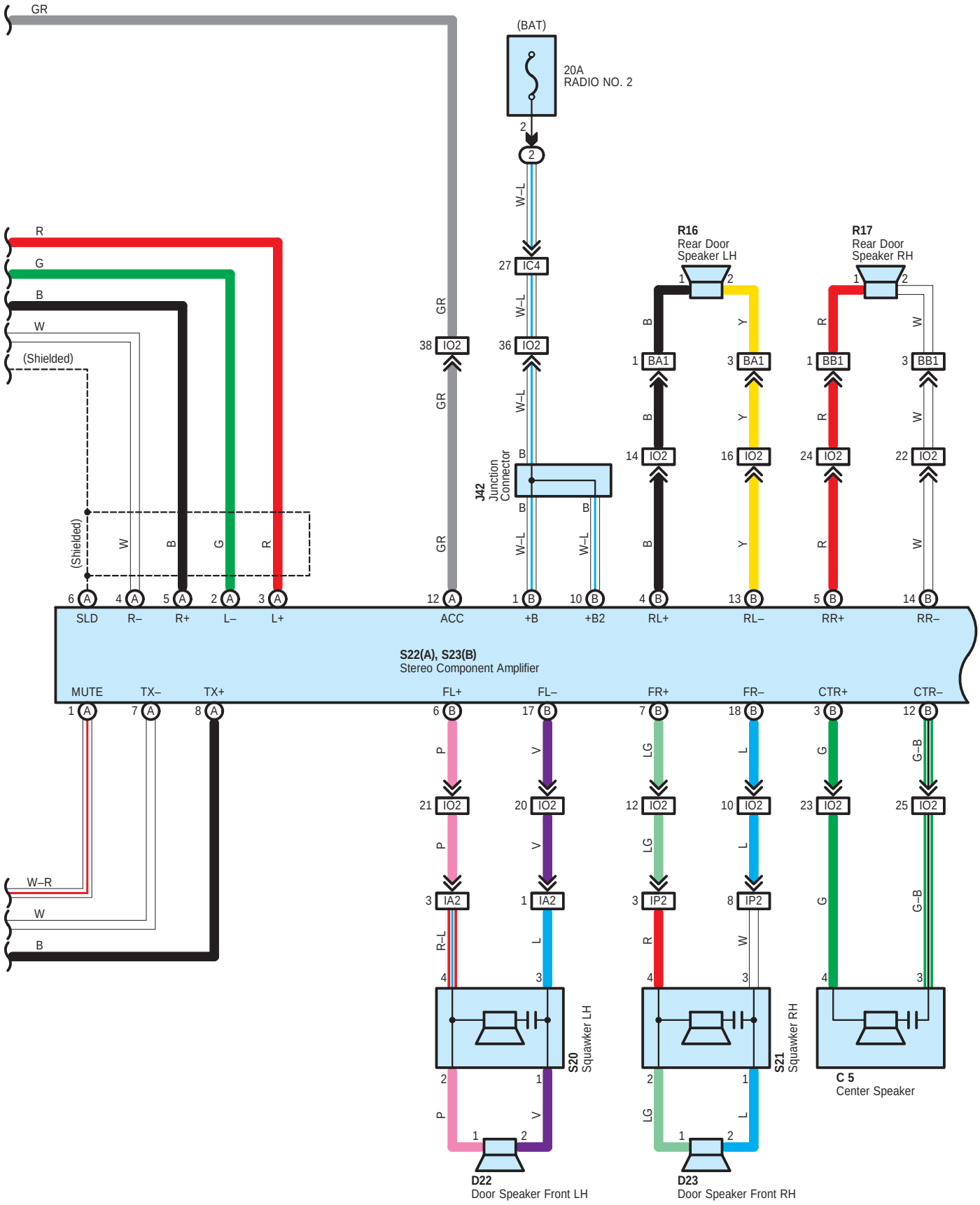
GR
(BAT)
20A
RADIO NO. 2
2
W–L
27 IC4
38 IO2
36 IO2
GR
J42
Junction
Connector
R16
Rear Door
Speaker LH
R17
Rear Door
Speaker RH
R
G
B
W
(Shielded)
6 A SLD
4 A R–
5 A R+
2 A L–
3 A L+
12 A ACC
1 B +B
10 B +B2
4 B RL+
13 B RL–
5 B RR+
14 B RR–
S22(A), S23(B)
Stereo Component Amplifier
MUTE
TX–
TX+
FL+
FL–
FR+
FR–
CTR+
CTR–
W–R
21 IO2
20 IO2
12 IO2
10 IO2
23 IO2
25 IO2
3 IA2
1 IA2
3 IP2
8 IP2
S20
Squawker LH
S21
Squawker RH
C 5
Center Speaker
D22
Door Speaker Front LH
D23
Door Speaker Front RH

Audio System with 10 Speaker

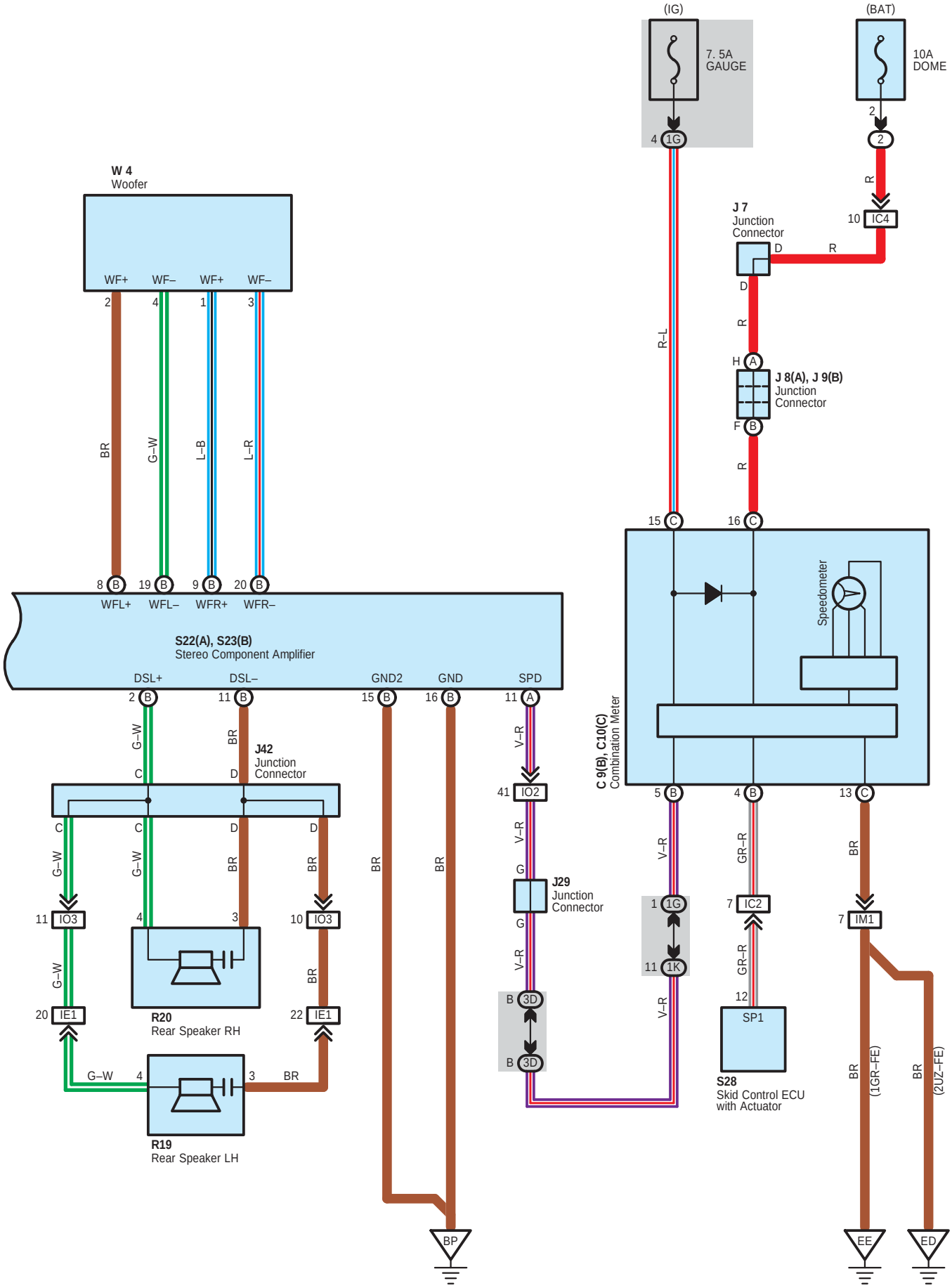

: Parts Location

Code	See Page	Code	See Page	Code	See Page
A37	36	J9 B	38	S20	41
C5	37	J29	38	S21	41
C9 B	37	J42	40	S22 A	41
C10 C	37	R1 A	39	S23 B	41
C13	37	R4 B	39	S28	33 (2UZ–FE)
D22	40	R5 C	39		35 (1GR–FE)
D23	40	R16	41	S31	39
E8	37	R17	41	V14	39
J6	38	R18	41	W4	41
J7	38	R19	41		
J8 A	38	R20	41		

: Relay Blocks

Code	See Page	Relay Blocks (Relay Block Location)
2	22	Engine Room R/B (Engine Compartment Left)

: Junction Block and Wire Harness Connector

Code	See Page	Junction Block and Wire Harness (Connector Location)
1G	25	Instrument Panel Wire and Driver Side J/B (Lower Finish Panel)
1K		
3A	28	Instrument Panel Wire and Center J/B (Instrument Panel Brace RH)
3B		
3C		
3D		
3E		

: Connector Joining Wire Harness and Wire Harness

Code	See Page	Joining Wire Harness and Wire Harness (Connector Location)
IA2	46	Front Door LH Wire and Instrument Panel Wire (Left Kick Panel)
IC2	46	Instrument Panel Wire and Engine Room Main Wire (Left Kick Panel)
IC3		
IC4		
ID1	46	Radio Installation Wiring Sub Assembly and Instrument Panel Wire (Left Kick Panel)
IE1	46	Instrument Panel Wire and Floor No.2 Wire (Left Kick Panel)
II1	46	Instrument Panel Wire and Instrument Panel Wire (Instrument Panel Brace LH)
IK1	47	Instrument Panel Wire and Instrument Panel Wire (Left Upper Side of the Glove Box)
IM1	47	Engine Wire and Instrument Panel Wire (Right Side of Blower Unit)
IO2	47	Instrument Panel Wire and Floor Wire (Right Kick Panel)
IO3		
IP2	47	Front Door RH Wire and Instrument Panel Wire (Right Kick Panel)
BA1	48	Rear Door No.2 Wire and Instrument Panel Wire (Left Center Pillar)
BB1	48	Rear Door No.1 Wire and Instrument Panel Wire (Right Center Pillar)
BJ1	48	Radio Installation Wiring Sub Assembly and Radio Installation Wiring Sub Assembly (Center of Roof)

: Ground Points

Code	See Page	Ground Points Location
ED	44 (2UZ–FE)	Left Bank Cylinder Head
EE	45 (1GR–FE)	Rear Side of Right Bank Cylinder Block
IJ	46	Instrument Panel Brace RH
BP	48	Rear Pillar RH

Audio System with 6 Speaker

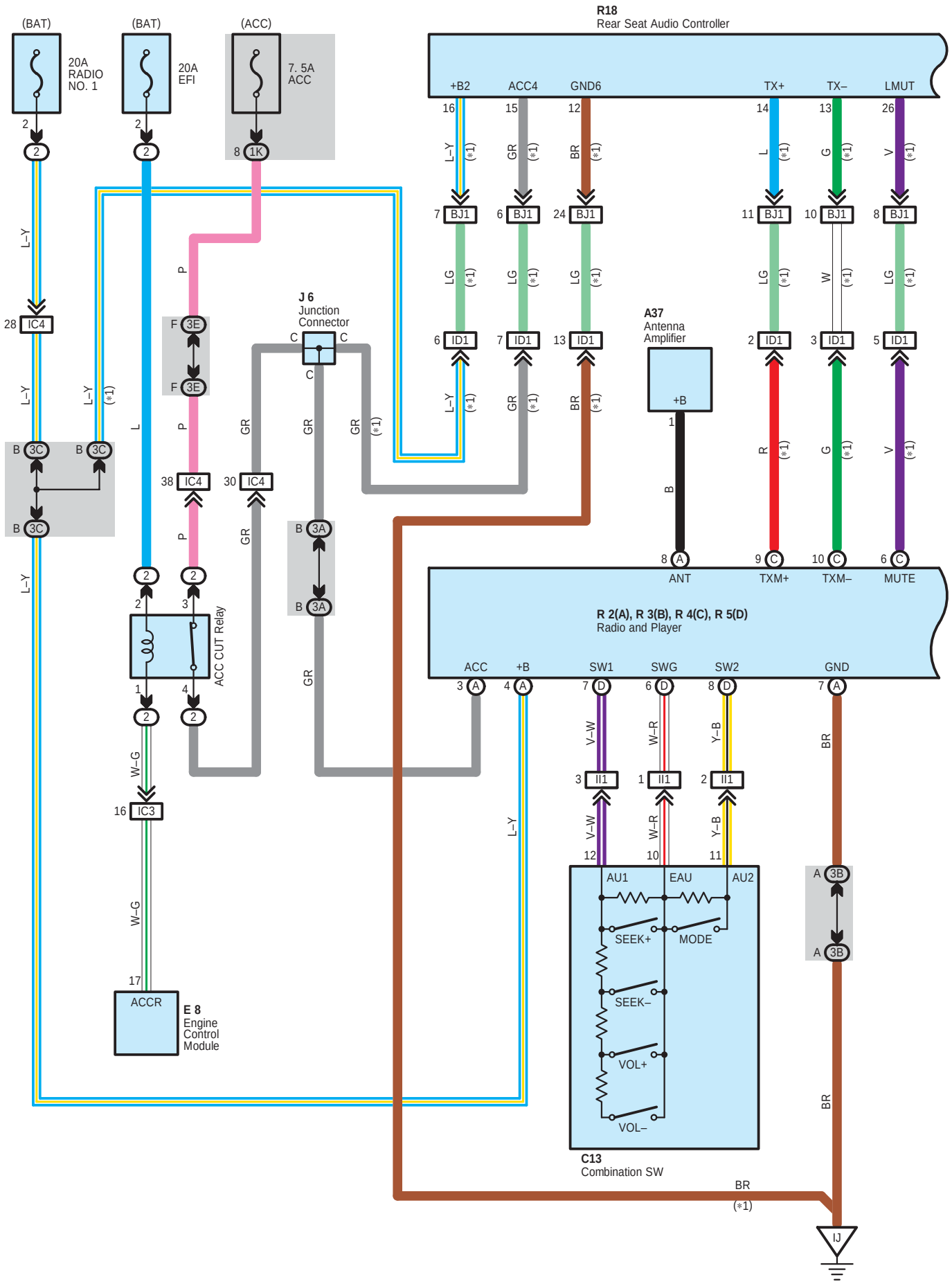

∗ 1 : w/ Rear Seat Entertainment System

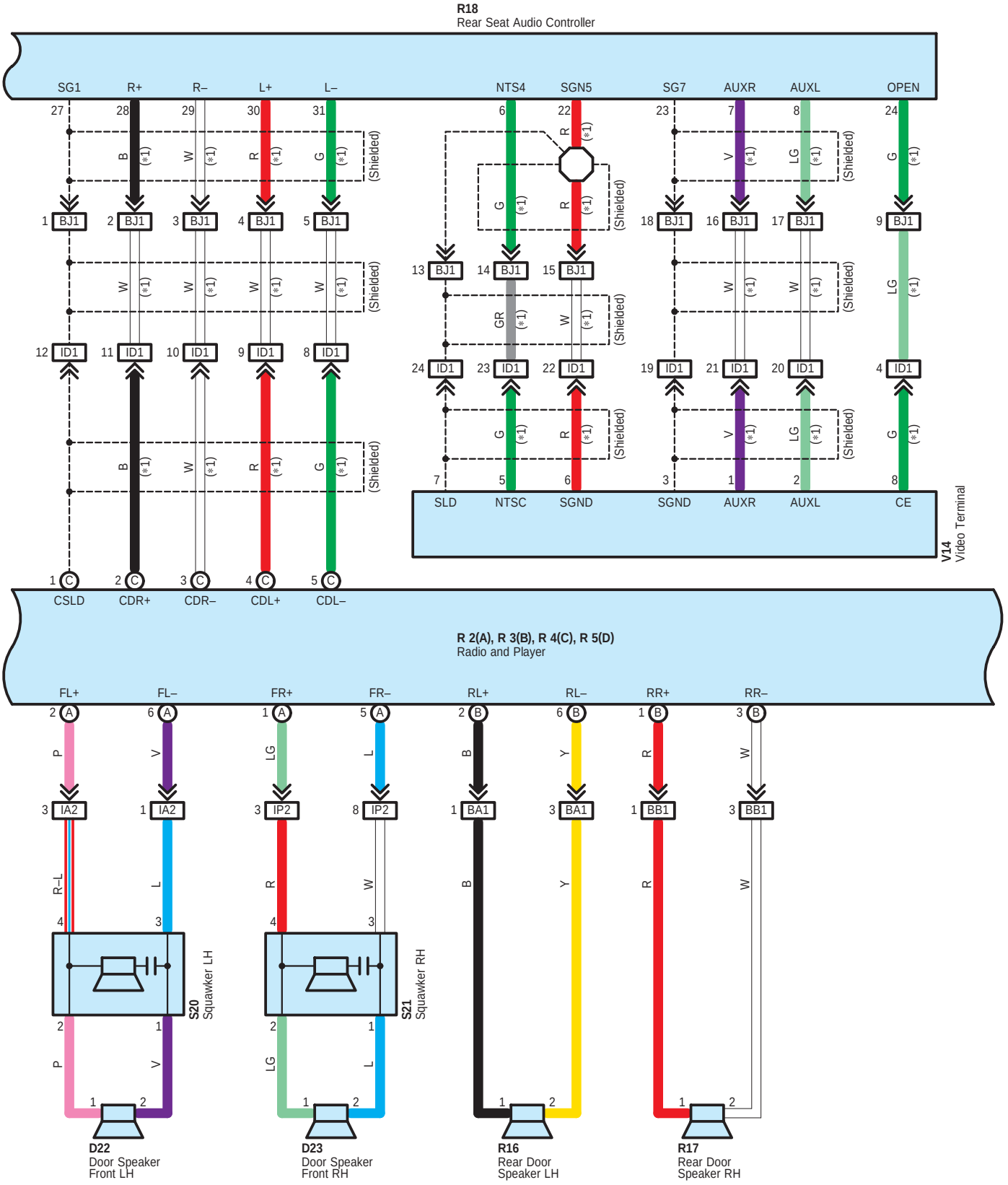

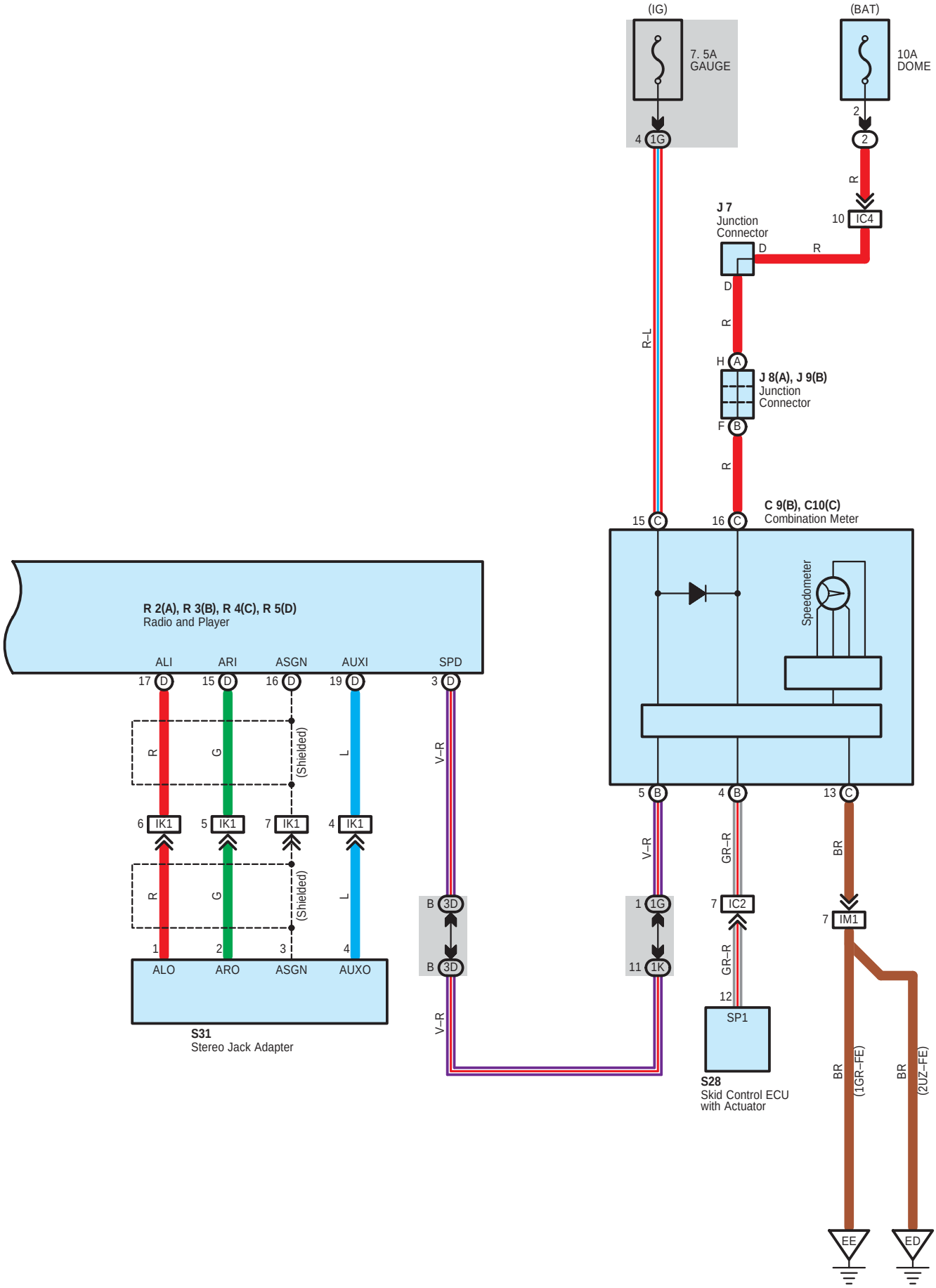
(IG)
7. 5A
GAUGE
(BAT)
10A
DOME
4 1G
2
2
R
J 7
Junction
Connector
10 IC4
D
R
D
R
R–L
H A
J 8(A), J 9(B)
Junction
Connector
F B
R
C 9(B), C10(C)
Combination Meter
15 C
16 C
Speedometer
R 2(A), R 3(B), R 4(C), R 5(D)
Radio and Player
ALI
ARI
ASGN
AUXI
SPD
17 D
15 D
16 D
19 D
3 D
R
G
(Shielded)
L
V–R
6 IK1
5 IK1
7 IK1
4 IK1
R
G
(Shielded)
L
1
2
3
4
ALO
ARO
ASGN
AUXO
S31
Stereo Jack Adapter
B 3D
B 3D
V–R
5 B
4 B
13 C
V–R
GR–R
BR
1 1G
11 1K
7 IC2
7 IM1
GR–R
12
SP1
S28
Skid Control ECU
with Actuator
BR
(1GR–FE)
BR
(2UZ–FE)
EE
ED

: Parts Location

Code	See Page	Code	See Page	Code	See Page
A37	36	J7	38	R17	41
C9 B	37	J8 A	38	R18	41
C10 C	37	J9 B	38	S20	41
C13	37	R2 A	39	S21	41
D22	40	R3 B	39	S28	33 (2UZ–FE)
D23	40	R4 C	39		35 (1GR–FE)
E8	37	R5 D	39	S31	39
J6	38	R16	41	V14	39

: Relay Blocks

Code	See Page	Relay Blocks (Relay Block Location)
2	22	Engine Room R/B (Engine Compartment Left)

: Junction Block and Wire Harness Connector

Code	See Page	Junction Block and Wire Harness (Connector Location)
1G	25	Instrument Panel Wire and Driver Side J/B (Lower Finish Panel)
1K		
3A	28	Instrument Panel Wire and Center J/B (Instrument Panel Brace RH)
3B		
3C		
3D		
3E		

: Connector Joining Wire Harness and Wire Harness

Code	See Page	Joining Wire Harness and Wire Harness (Connector Location)
IA2	46	Front Door LH Wire and Instrument Panel Wire (Left Kick Panel)
IC2	46	Instrument Panel Wire and Engine Room Main Wire (Left Kick Panel)
IC3		
IC4		
ID1	46	Radio Installation Wiring Sub Assembly and Instrument Panel Wire (Left Kick Panel)
II1	46	Instrument Panel Wire and Instrument Panel Wire (Instrument Panel Brace LH)
IK1	47	Instrument Panel Wire and Instrument Panel Wire (Left Upper Side of the Glove Box)
IM1	47	Engine Wire and Instrument Panel Wire (Right Side of Blower Unit)
IP2	47	Front Door RH Wire and Instrument Panel Wire (Right Kick Panel)
BA1	48	Rear Door No.2 Wire and Instrument Panel Wire (Left Center Pillar)
BB1	48	Rear Door No.1 Wire and Instrument Panel Wire (Right Center Pillar)
BJ1	48	Radio Installation Wiring Sub Assembly and Radio Installation Wiring Sub Assembly (Center of Roof)

: Ground Points

Code	See Page	Ground Points Location
ED	44 (2UZ–FE)	Left Bank Cylinder Head
EE	45 (1GR–FE)	Rear Side of Right Bank Cylinder Block
IJ	46	Instrument Panel Brace RH

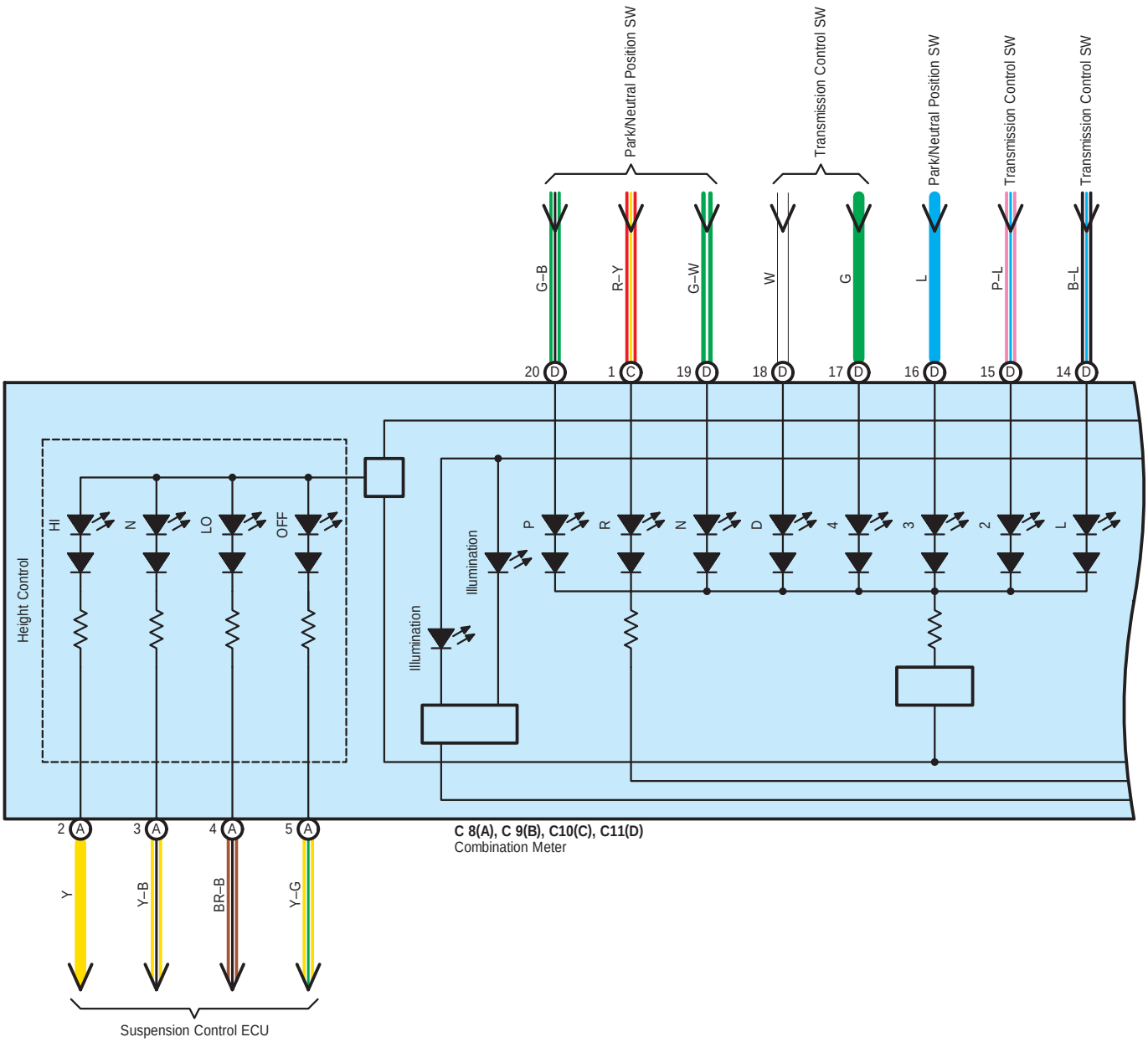
Park/Neutral Position SW
Transmission Control SW
Park/Neutral Position SW
Transmission Control SW
Transmission Control SW
G–B
R–Y
G–W
W
G
L
P–L
B–L
20 D
1 C
19 D
18 D
17 D
16 D
15 D
14 D
Height Control
HI
N
LO
OFF
Illumination
Illumination
P
R
N
D
4
3
2
L
2 A
3 A
4 A
5 A
C 8(A), C 9(B), C10(C), C11(D)
Combination Meter
Y
Y–B
BR–B
Y–G
Suspension Control ECU

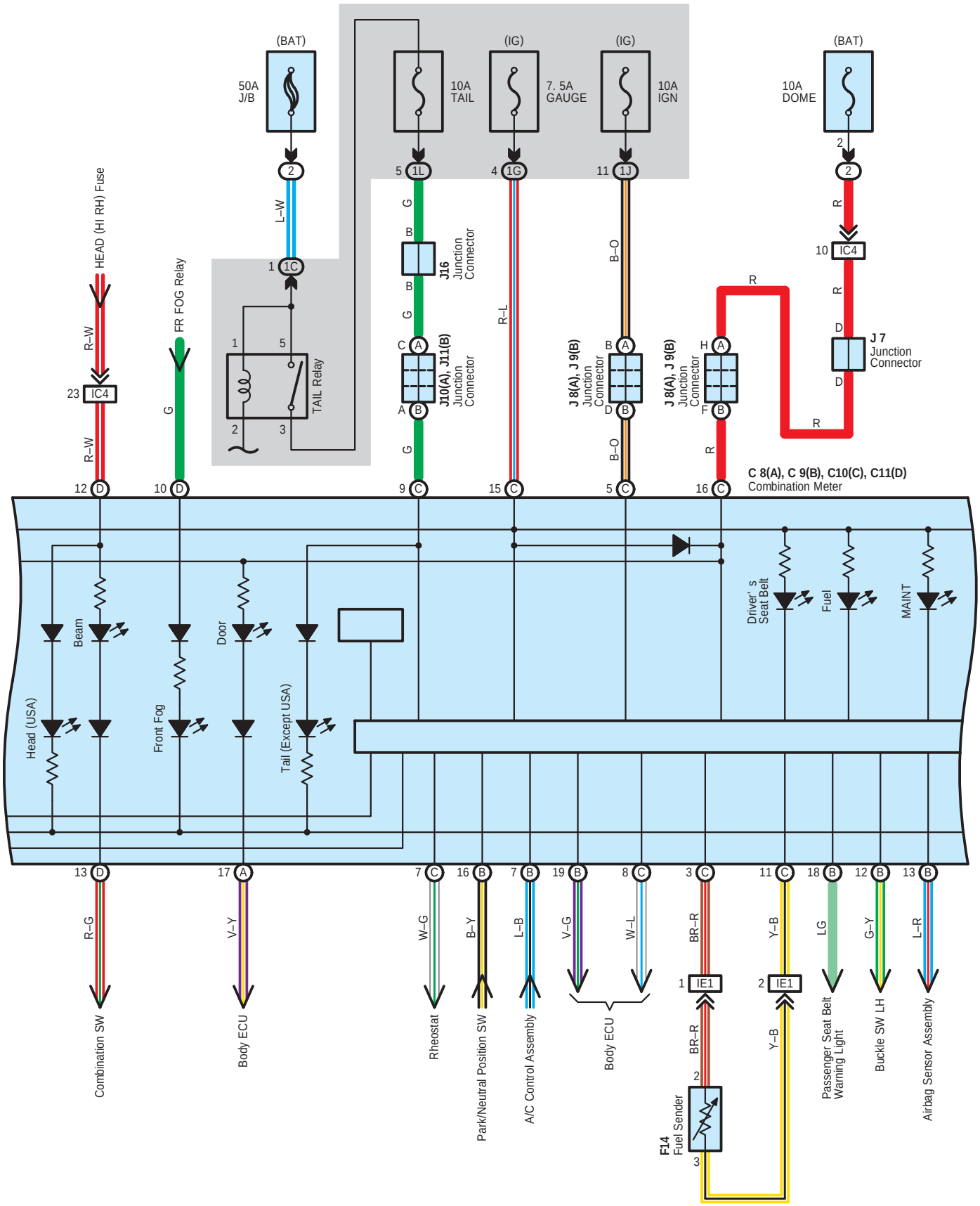
(BAT)
50A J/B
10A TAIL
(IG)
7. 5A GAUGE
(IG)
10A IGN
(BAT)
10A DOME
HEAD (HI RH) Fuse
FR FOG Relay
TAIL Relay
J16 Junction Connector
J10(A), J11(B) Junction Connector
J 8(A), J 9(B) Junction Connector
J 8(A), J 9(B) Junction Connector
J 7 Junction Connector
C 8(A), C 9(B), C10(C), C11(D) Combination Meter
Beam
Door
Head (USA)
Front Fog
Tail (Except USA)
Driver' s Seat Belt
Fuel
MAINT
F14 Fuel Sender
Combination SW
Body ECU
Rheostat
Park/Neutral Position SW
A/C Control Assembly
Body ECU
Passenger Seat Belt Warning Light
Buckle SW LH
Airbag Sensor Assembly

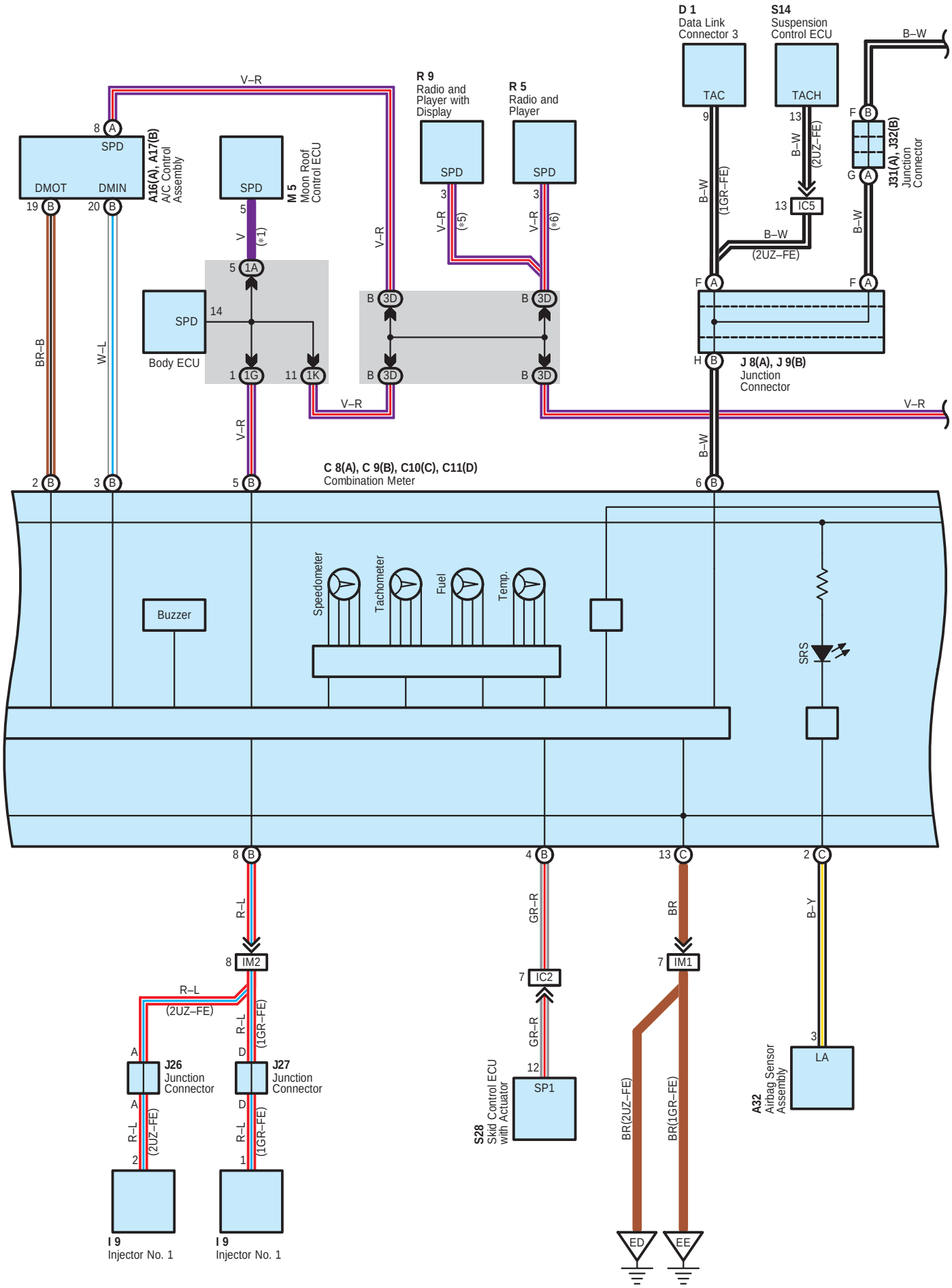
D 1
Data Link Connector 3
S14
Suspension Control ECU
TAC
TACH
B–W
R 9
Radio and Player with Display
R 5
Radio and Player
SPD
V–R
A16(A), A17(B)
A/C Control Assembly
DMOT
DMIN
M 5
Moon Roof Control ECU
(*1)
(*5)
(*6)
B–W (1GR–FE)
B–W (2UZ–FE)
IC5
J31(A), J32(B)
Junction Connector
Body ECU
J 8(A), J 9(B)
Junction Connector
BR–B
W–L
C 8(A), C 9(B), C10(C), C11(D)
Combination Meter
Buzzer
Speedometer
Tachometer
Fuel
Temp.
SRS
R–L
IM2
IM1
IC2
GR–R
BR
B–Y
R–L (2UZ–FE)
R–L (1GR–FE)
J26
Junction Connector
J27
Junction Connector
S28
Skid Control ECU with Actuator
SP1
LA
A32
Airbag Sensor Assembly
BR(2UZ–FE)
BR(1GR–FE)
ED
EE
I 9
Injector No. 1
I 9
Injector No. 1

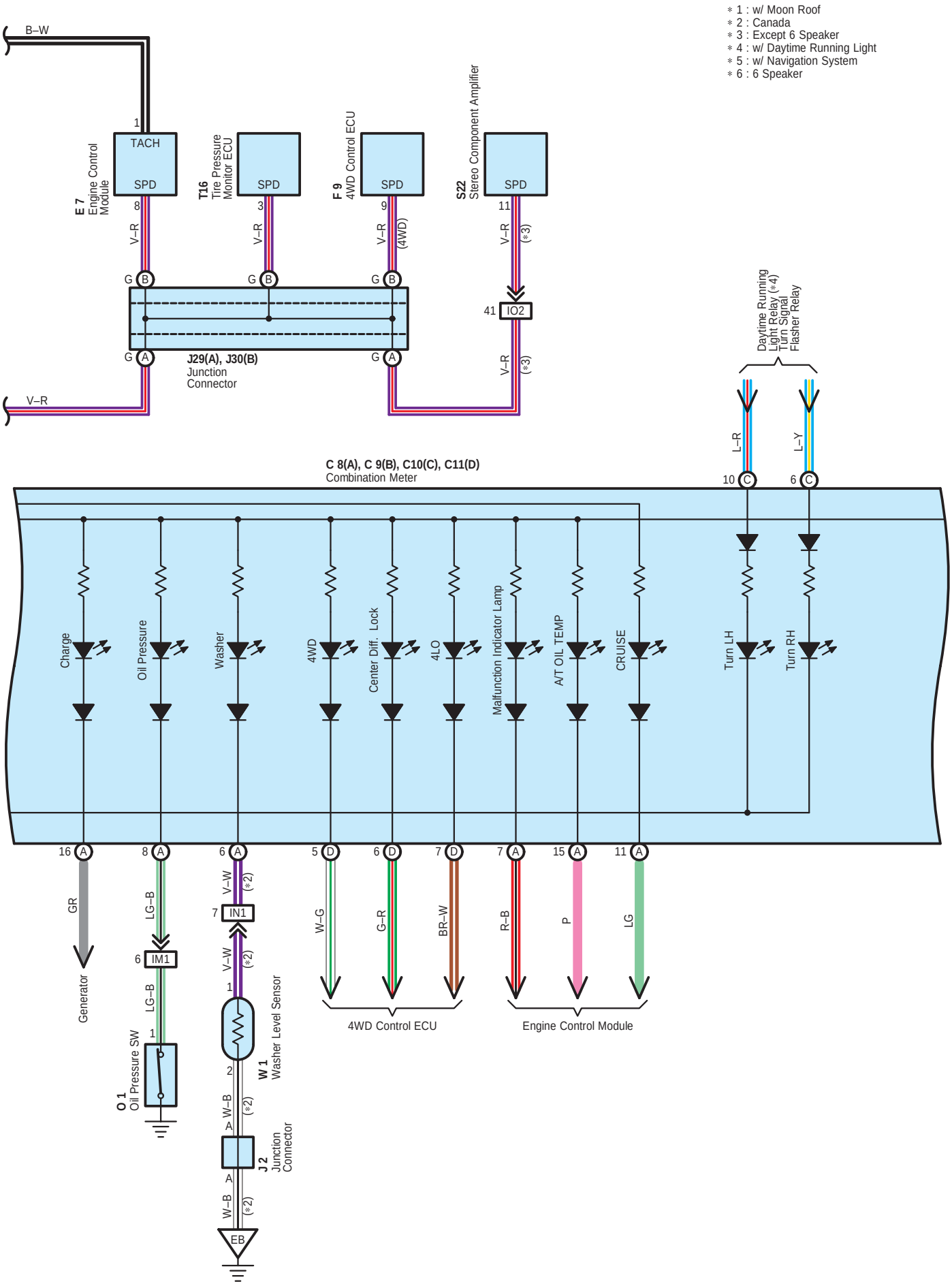
* 1 : w/ Moon Roof
* 2 : Canada
* 3 : Except 6 Speaker
* 4 : w/ Daytime Running Light
* 5 : w/ Navigation System
* 6 : 6 Speaker
B–W
1
TACH
SPD
E 7
Engine Control Module
8
V–R
G
B
T16
Tire Pressure Monitor ECU
3
F 9
4WD Control ECU
9
(4WD)
S22
Stereo Component Amplifier
11
(*3)
41
IO2
J29(A), J30(B)
Junction Connector
A
V–R
Daytime Running Light Relay (*4)
Turn Signal Flasher Relay
L–R
L–Y
10
6
C
C 8(A), C 9(B), C10(C), C11(D)
Combination Meter
Charge
Oil Pressure
Washer
4WD
Center Diff. Lock
4LO
Malfunction Indicator Lamp
A/T OIL TEMP
CRUISE
Turn LH
Turn RH
16
8
6
5
7
15
11
D
GR
Generator
LG–B
IM1
O 1
Oil Pressure SW
V–W
IN1
W 1
Washer Level Sensor
W–B
J 2
Junction Connector
EB
W–G
G–R
BR–W
R–B
P
LG
4WD Control ECU
Engine Control Module

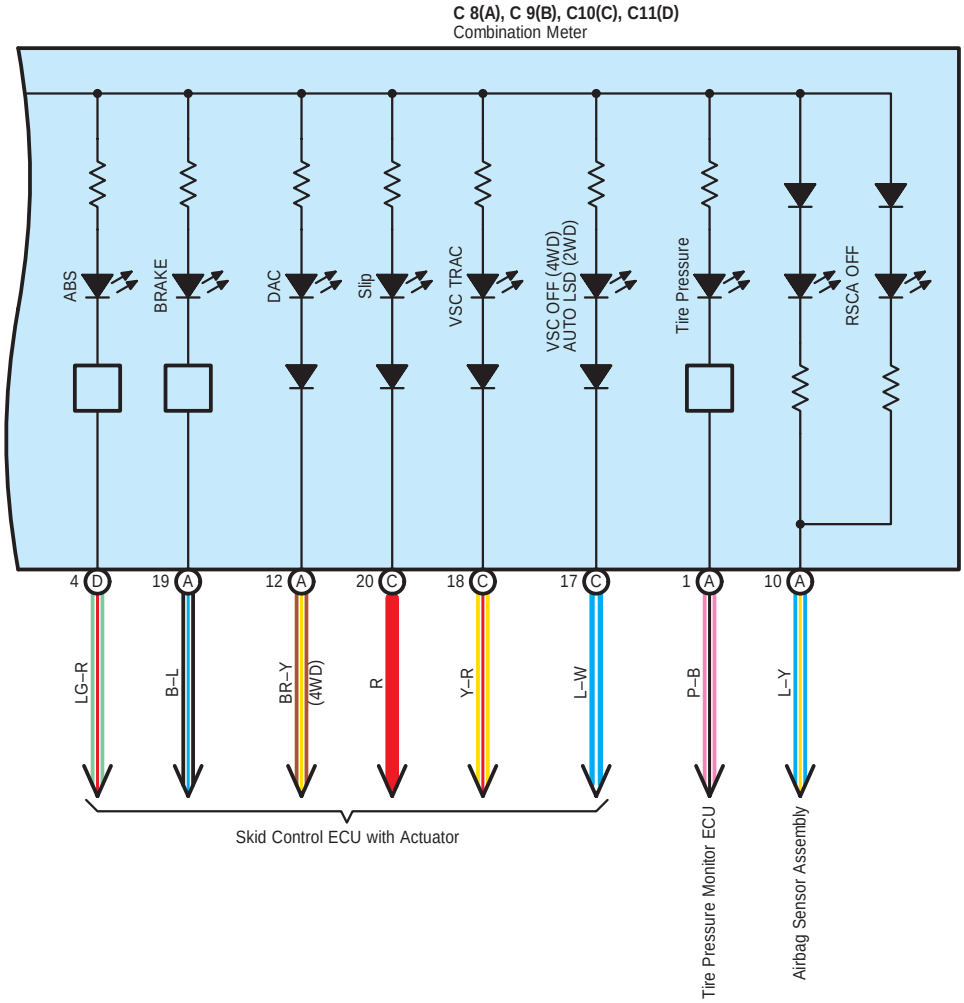
C 8(A), C 9(B), C10(C), C11(D)
Combination Meter
ABS
BRAKE
DAC
Slip
VSC TRAC
VSC OFF (4WD)
AUTO LSD (2WD)
Tire Pressure
RSCA OFF
4 D
19 A
12 A
20 C
18 C
17 C
1 A
10 A
LG–R
B–L
BR–Y
(4WD)
R
Y–R
L–W
P–B
L–Y
Skid Control ECU with Actuator
Tire Pressure Monitor ECU
Airbag Sensor Assembly

: Parts Location

Code		See Page	Code		See Page	Code		See Page
A16	A	36	J2		33 (2UZ–FE)	J32	B	38
A17	B	36			35 (1GR–FE)	M5		41
A32		36	J7		38	O1		33 (2UZ–FE)
C8	A	37	J8	A	38			35 (1GR–FE)
C9	B	37	J9	B	38	R5		39
C10	C	37	J10	A	38	R9		39
C11	D	37	J11	B	38	S14		39
D1		37	J16		38	S22		41
E7		37	J26		38	S28		33 (2UZ–FE)
F9		37	J27		38			35 (1GR–FE)
F14		40	J29	A	38	T16		39
I9		33 (2UZ–FE)	J30	B	38	W1		33 (2UZ–FE)
		35 (1GR–FE)	J31	A	38			35 (1GR–FE)

: Relay Blocks

Code	See Page	Relay Blocks (Relay Block Location)
2	22	Engine Room R/B (Engine Compartment Left)

: Junction Block and Wire Harness Connector

Code	See Page	Junction Block and Wire Harness (Connector Location)
1A	24	Roof Wire and Driver Side J/B (Lower Finish Panel)
1C	24	Engine Room Main Wire and Driver Side J/B (Lower Finish Panel)
1G	25	Instrument Panel Wire and Driver Side J/B (Lower Finish Panel)
1J		
1K		
1L		
3D	28	Instrument Panel Wire and Center J/B (Instrument Panel Brace RH)

: Connector Joining Wire Harness and Wire Harness

Code	See Page	Joining Wire Harness and Wire Harness (Connector Location)
IC2	46	Instrument Panel Wire and Engine Room Main Wire (Left Kick Panel)
IC4		
IC5		
IE1	46	Instrument Panel Wire and Floor No.2 Wire (Left Kick Panel)
IM1	47	Engine Wire and Instrument Panel Wire (Right Side of Blower Unit)
IM2		
IN1	47	Instrument Panel Wire and Engine Room Main Wire (Right Kick Panel)
IO2	47	Instrument Panel Wire and Floor Wire (Right Kick Panel)

: Ground Points

Code	See Page	Ground Points Location
EB	44 (2UZ–FE)	Front Left Fender
	45 (1GR–FE)	
ED	44 (2UZ–FE)	Left Bank Cylinder Head
EE	44 (2UZ–FE)	Rear Side of Cylinder Block
	45 (1GR–FE)	Rear Side of Right Bank Cylinder Block

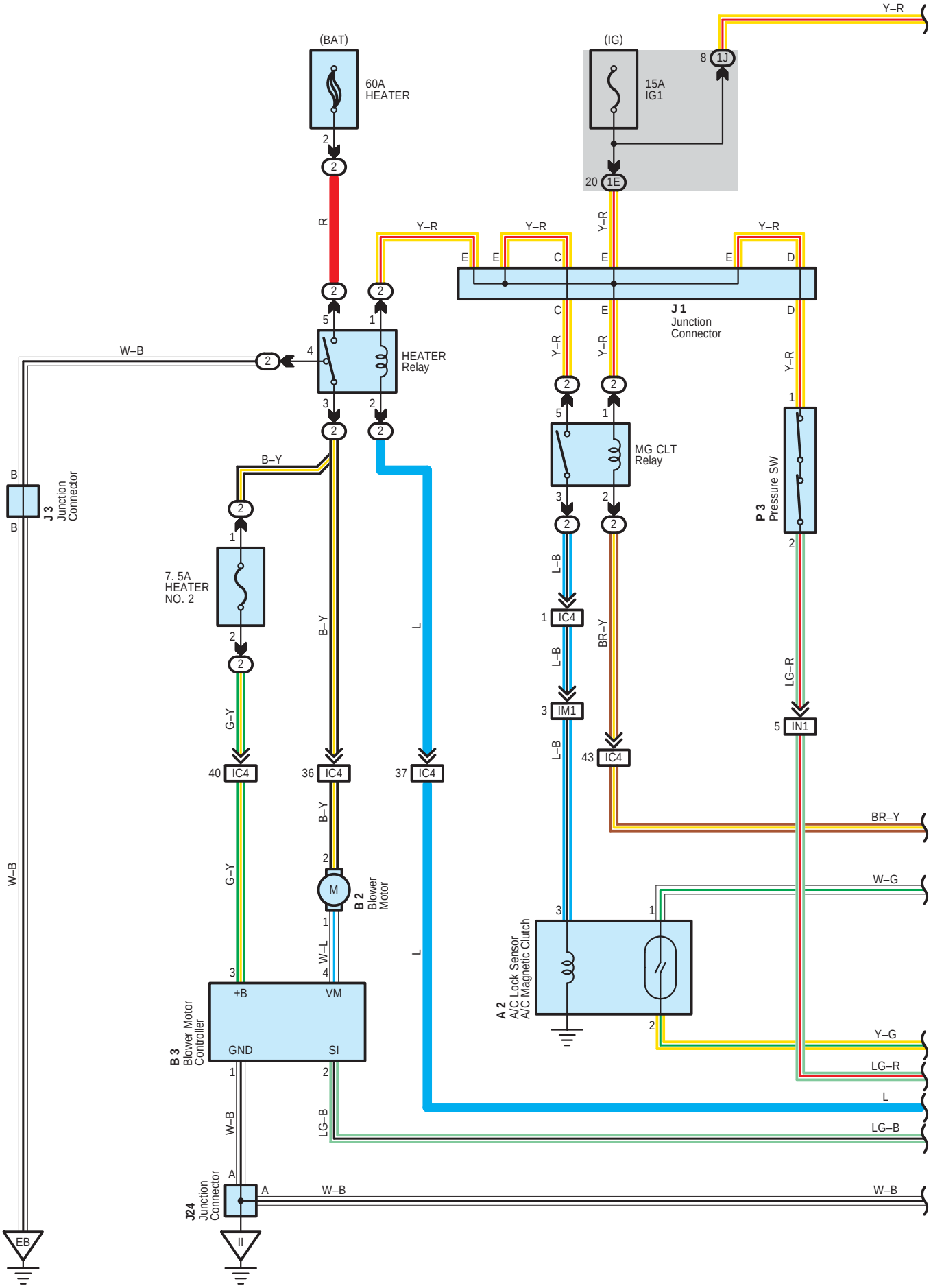
(BAT)
60A
HEATER
(IG)
15A
IG1
8 1J
20 1E
Y–R
R
HEATER
Relay
MG CLT
Relay
J1
Junction
Connector
P3
Pressure SW
J3
Junction
Connector
7. 5A
HEATER
NO. 2
B–Y
G–Y
L
L–B
BR–Y
LG–R
W–B
W–G
Y–G
LG–B
IC4
IM1
IN1
40 IC4
36 IC4
37 IC4
43 IC4
B2
Blower
Motor
M
B3
Blower Motor
Controller
+B
VM
GND
SI
W–L
A2
A/C Lock Sensor
A/C Magnetic Clutch
J24
Junction
Connector
EB

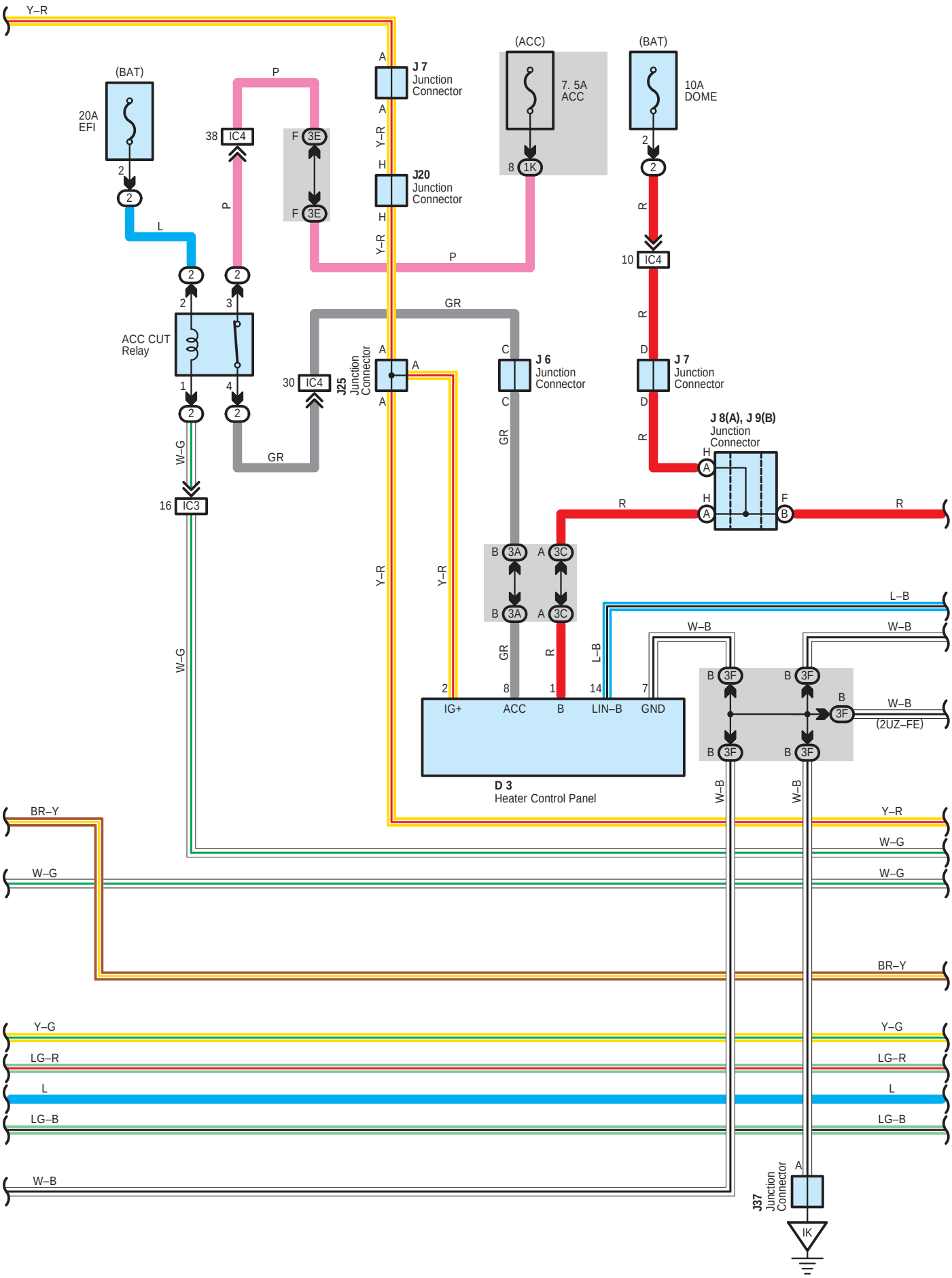
Y–R
(BAT)
20A
EFI
2
2
L
2
2
2
3
ACC CUT
Relay
1
4
2
2
W–G
16 IC3
W–G
P
38 IC4
P
GR
30 IC4
GR
A
J 7
Junction
Connector
A
Y–R
H
J20
Junction
Connector
H
Y–R
P
F 3E
F 3E
J25
Junction
Connector
A
A
Y–R
Y–R
(ACC)
7. 5A
ACC
8 1K
C
J 6
Junction
Connector
C
GR
B 3A
A 3C
B 3A
A 3C
GR
R
2
8
1
IG+
ACC
B
(BAT)
10A
DOME
2
2
R
10 IC4
R
D
J 7
Junction
Connector
D
R
J 8(A), J 9(B)
Junction
Connector
H
A
H
A
F
B
R
R
L–B
W–B
W–B
14
7
LIN–B
GND
B 3F
B 3F
B 3F
B 3F
B
3F
W–B
(2UZ–FE)
D 3
Heater Control Panel
W–B
W–B
BR–Y
Y–R
W–G
W–G
W–G
BR–Y
Y–G
LG–R
L
LG–B
W–B
Y–G
LG–R
L
LG–B
J37
Junction
Connector
A
IK

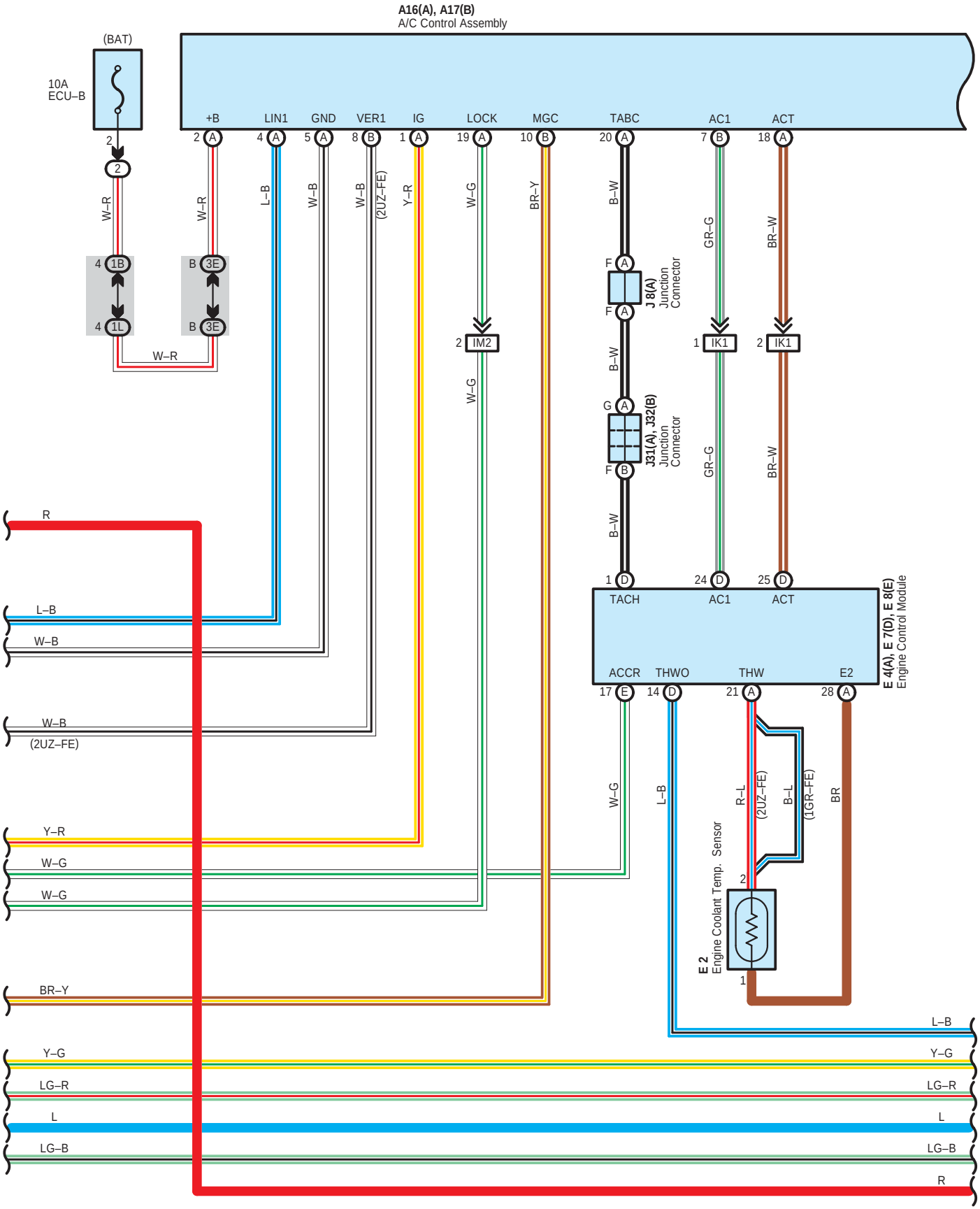
A16(A), A17(B)
A/C Control Assembly
(BAT)
10A
ECU–B
+B
LIN1
GND
VER1
IG
LOCK
MGC
TABC
AC1
ACT
W–R
L–B
W–B
(2UZ–FE)
Y–R
W–G
BR–Y
B–W
GR–G
BR–W
J 8(A)
Junction
Connector
J31(A), J32(B)
Junction
Connector
IM2
IK1
TACH
AC1
ACT
ACCR
THWO
THW
E2
E 4(A), E 7(D), E 8(E)
Engine Control Module
E 2
Engine Coolant Temp. Sensor
R–L
B–L
BR
(1GR–FE)
R
Y–G
LG–R
L
LG–B

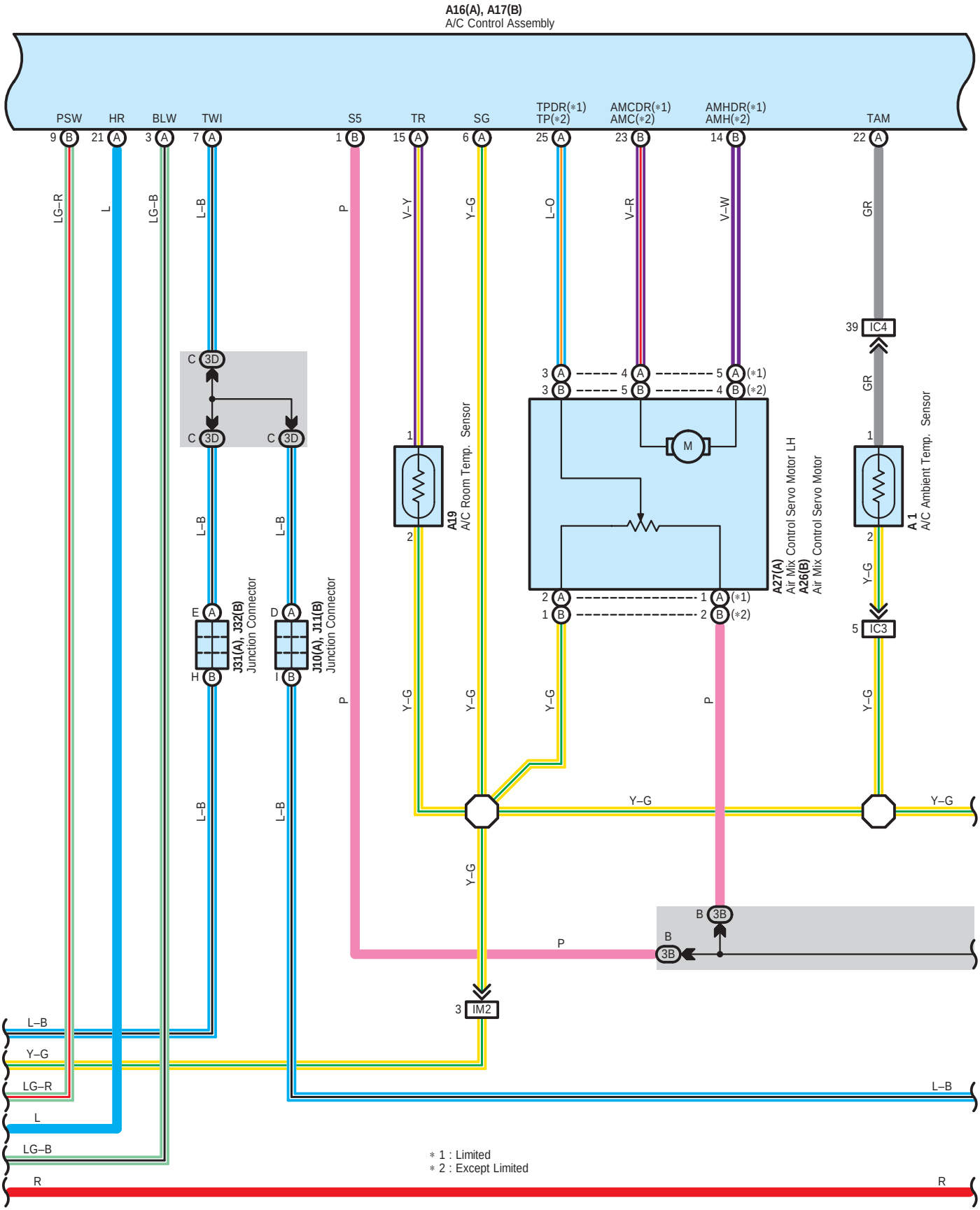
A16(A), A17(B)
A/C Control Assembly
PSW
HR
BLW
TWI
S5
TR
SG
TPDR(*1)
TP(*2)
AMCDR(*1)
AMC(*2)
AMHDR(*1)
AMH(*2)
TAM
9 B
21 A
3 A
7 A
1 B
15 A
6 A
25 A
23 B
14 B
22 A
LG–R
L
LG–B
L–B
P
V–Y
Y–G
L–O
V–R
V–W
GR
39 IC4
C 3D
E A
H B
D A
I B
J31(A), J32(B)
Junction Connector
J10(A), J11(B)
Junction Connector
A19
A/C Room Temp. Sensor
3 A
3 B
4 A
5 B
5 A (*1)
4 B (*2)
M
A27(A)
Air Mix Control Servo Motor LH
A26(B)
Air Mix Control Servo Motor
2 A
1 B
1 A (*1)
2 B (*2)
A 1
A/C Ambient Temp. Sensor
5 IC3
B 3B
3 IM2
R
* 1 : Limited
* 2 : Except Limited

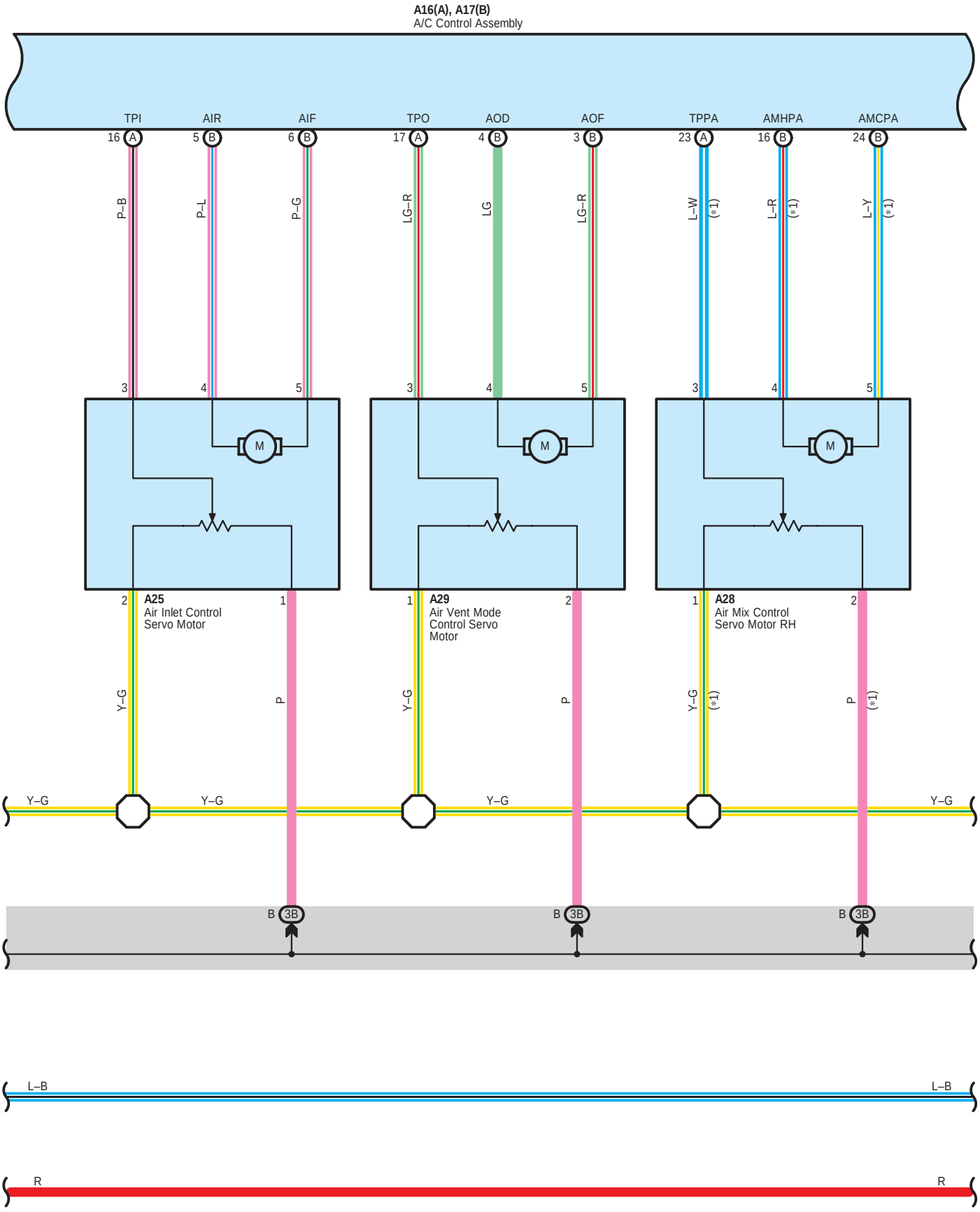
A16(A), A17(B)
A/C Control Assembly
TPI
AIR
AIF
TPO
AOD
AOF
TPPA
AMHPA
AMCPA
16 A
5 B
6 B
17 A
4 B
3 B
23 A
16 B
24 B
P–B
P–L
P–G
LG–R
LG
LG–R
L–W
L–R
L–Y
(*1)
3
4
5
M
2
1
A25
Air Inlet Control Servo Motor
A29
Air Vent Mode Control Servo Motor
A28
Air Mix Control Servo Motor RH
Y–G
P
B 3B
L–B
R

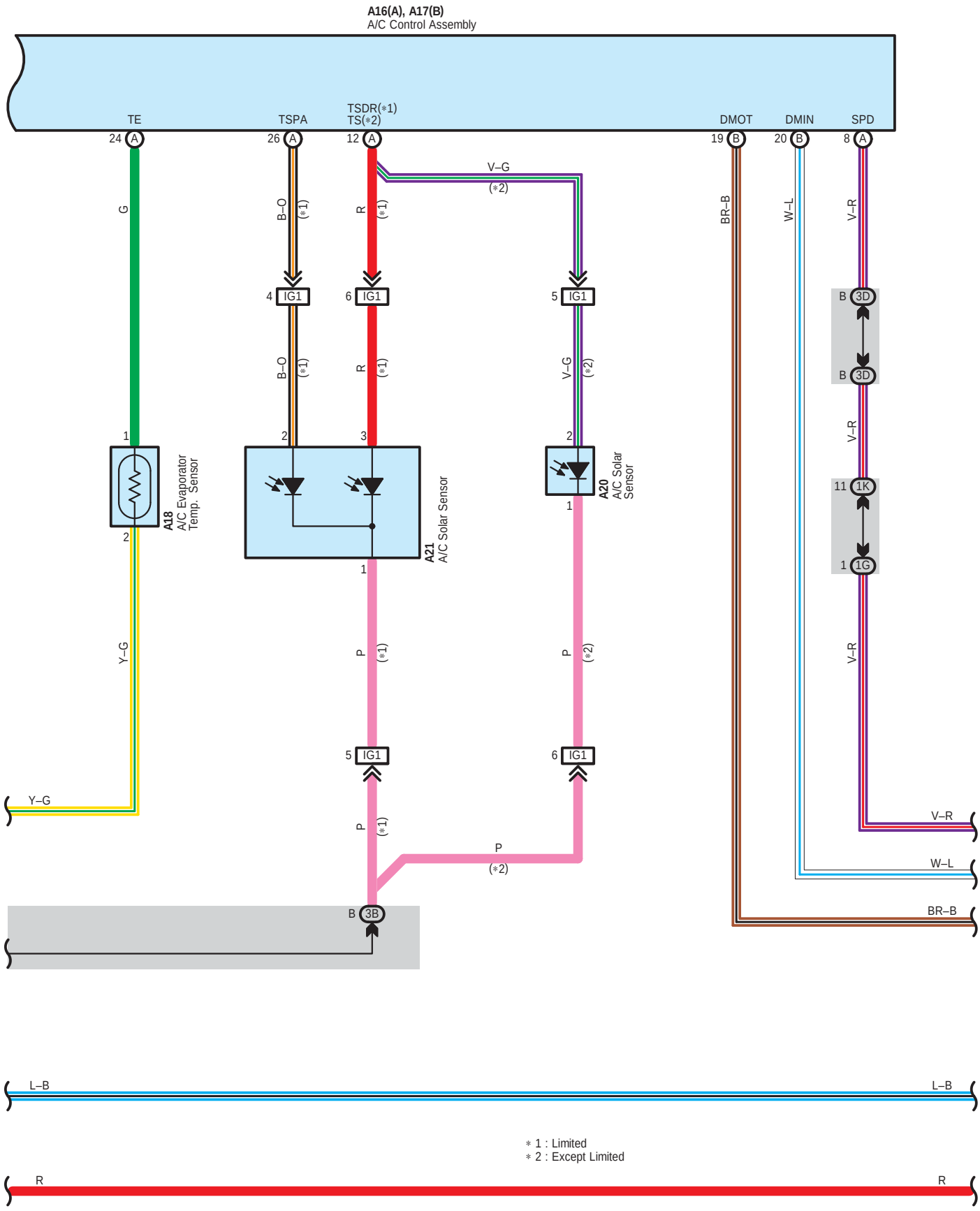
A16(A), A17(B)
A/C Control Assembly
TE
TSPA
TSDR(∗1)
TS(∗2)
DMOT
DMIN
SPD
24 A
26 A
12 A
19 B
20 B
8 A
G
B–O
(∗1)
R
V–G
(∗2)
BR–B
W–L
V–R
4 IG1
6 IG1
5 IG1
B 3D
1
2
3
A18
A/C Evaporator
Temp. Sensor
A21
A/C Solar Sensor
A20
A/C Solar
Sensor
11 1K
1 1G
Y–G
P
5 IG1
6 IG1
B 3B
L–B
∗ 1 : Limited
∗ 2 : Except Limited
R

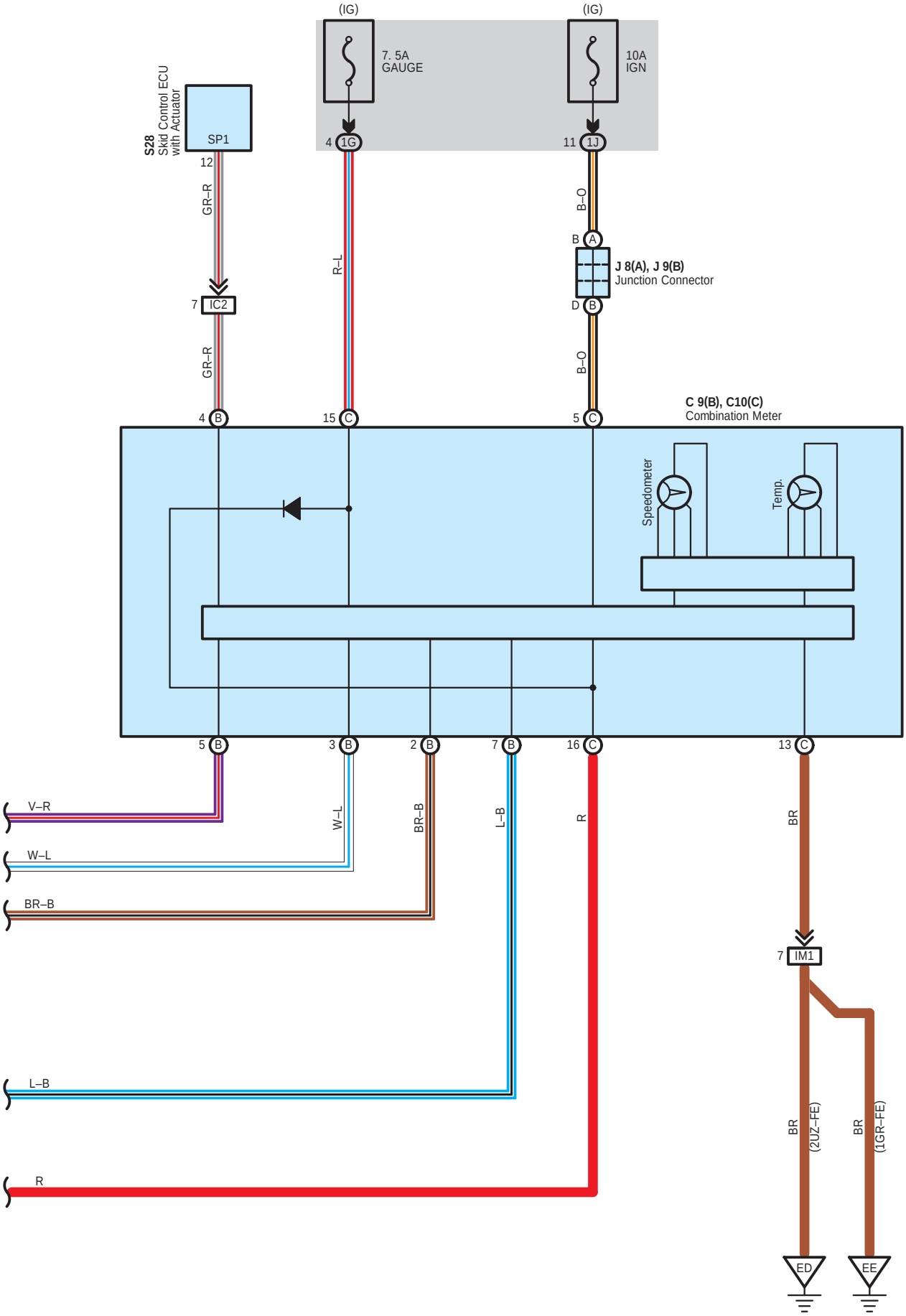
(IG)
7. 5A
GAUGE
(IG)
10A
IGN
S28
Skid Control ECU
with Actuator
SP1
12
GR–R
7
IC2
GR–R
4
B
4
1G
R–L
15
C
11
1J
B–O
B
A
J 8(A), J 9(B)
Junction Connector
D
B
B–O
5
C
C 9(B), C10(C)
Combination Meter
Speedometer
Temp.
5
B
3
B
2
B
7
B
16
C
13
C
V–R
W–L
BR–B
L–B
R
BR
7
IM1
BR
(2UZ–FE)
BR
(1GR–FE)
ED
EE

System Outline

1. Heater Blower Operation

Manual operation

When the blower speed is set to a certain level using the blower control SW, the A/C control assembly sends the signals to the blower control to control the blower motor speed.

Auto operation

When the auto SW is pushed, the A/C control assembly sends the signals from various sensors and temperature SW to the blower control to automatically control the blower motor speed.

2. Air Inlet Control Servo Motor Control

When the FRESH/RECIRC select SW is set to RECIRC, the motor in the air inlet control servo motor starts rotating to move the damper toward the RECIRC side. Since the damper position is detected by the TERMINAL TPI of the A/C control assembly, the motor is continuously rotated until the damper reaches its stop position. When the FRESH/RECIRC select SW is set to FRESH, the motor in the air inlet control servo motor starts rotating to move the damper toward the FRESH side. Since the damper position is detected by the TERMINAL TPI of the A/C control assembly, the motor is continuously rotated until the damper reaches its stop position.

3. Air Vent Mode Control Servo Motor Control

When the mode select SW is pushed, the ECU in the A/C control assembly activates the air vent mode control servo motor. This causes the servo motor to rotate to the position (FACE, BI–LEVEL, FOOT, FOOT/DEF, DEF) selected using the mode select SW, and moves the damper.

4. Air Mix Control Servo Motor Control (Limited)

When the temperature control SW on the driver's side is pressed, the ECU in the A/C control assembly sends a signal to the air mix control servo motor on the driver's side. This signal drives the motor to reach the temperature set by the temperature control SW on the driver's side, and moves the damper. Passenger's side is operated as same as the driver's side.

5. Air Mix Control Servo Motor Control (Except Limited)

When the temperature control SW is pressed, the ECU in the A/C control assembly sends a signal to the air mix control servo motor. This signal drives the motor to reach the temperature set by the temperature control SW, and moves the film damper.

6. Air Conditioning Operation

The A/C control assembly receives various signals, I.E., the engine RPM from the engine control module, out side air temperature signal from the A/C ambient temp. sensor and coolant temperature from the engine control module, etc.

When the engine is started and the A/C SW (A/C control assembly) is on, a signal is input to the A/C control assembly.

As a result, turning the MG CLT relay on, so that the magnetic clutch is on and the A/C compressor operates.

If the A/C control assembly detects the following conditions, it stops the air conditioning:

* Evaporator outlet air is too low.
* There is a marked difference between the compressor speed and the engine speed.
* The refrigerant pressure is abnormally high or abnormally low.
* The engine speed is too low.
* Rapid acceleration occurs.

○ : Parts Location

Code	See Page	Code	See Page	Code	See Page
A1	32 (2UZ–FE)	B2	36	J7	38
	34 (1GR–FE)	B3	36	J8 A	38
A2	32 (2UZ–FE)	C9 B	37	J9 B	38
	34 (1GR–FE)	C10 C	37	J10 A	38
A16 A	36	D3	37	J11 B	38
A17 B	36	E2	32 (2UZ–FE)	J20	38
A18	36		34 (1GR–FE)	J24	38
A19	36	E4 A	37	J25	38
A20	36	E7 D	37	J31 A	38
A21	36	E8 E	37	J32 B	38
A25	36	J1	33 (2UZ–FE)	J37	38
A26 B	36		35 (1GR–FE)	P3	33 (2UZ–FE)
A27 A	36	J3	33 (2UZ–FE)		35 (1GR–FE)
A28	36		35 (1GR–FE)	S28	33 (2UZ–FE)
A29	36	J6	38		35 (1GR–FE)

: **Relay Blocks**

Code	See Page	Relay Blocks (Relay Block Location)
2	22	Engine Room R/B (Engine Compartment Left)

: **Junction Block and Wire Harness Connector**

Code	See Page	Junction Block and Wire Harness (Connector Location)
1B	24	Engine Room Main Wire and Driver Side J/B (Lower Finish Panel)
1E		
1G	25	Instrument Panel Wire and Driver Side J/B (Lower Finish Panel)
1J		
1K		
1L		
3A	28	Instrument Panel Wire and Center J/B (Instrument Panel Brace RH)
3B		
3C		
3D		
3E		
3F		

: **Connector Joining Wire Harness and Wire Harness**

Code	See Page	Joining Wire Harness and Wire Harness (Connector Location)
IC2	46	Instrument Panel Wire and Engine Room Main Wire (Left Kick Panel)
IC3		
IC4		
IG1	46	Instrument Panel No.2 Wire and Instrument Panel Wire (Behind the Combination Meter)
IK1	47	Instrument Panel Wire and Instrument Panel Wire (Left Upper Side of the Glove Box)
IM1	47	Engine Wire and Instrument Panel Wire (Right Side of Blower Unit)
IM2		
IN1	47	Instrument Panel Wire and Engine Room Main Wire (Right Kick Panel)

: **Ground Points**

Code	See Page	Ground Points Location
EB	44 (2UZ–FE)	Front Left Fender
	45 (1GR–FE)	
ED	44 (2UZ–FE)	Left Bank Cylinder Head
EE	44 (2UZ–FE)	Rear Side of Cylinder Block
	45 (1GR–FE)	Rear Side of Right Bank Cylinder Block
II	46	Instrument Panel Brace RH
IK	46	Right Kick Panel